SHARP SERVICE MANUAL

CODE: 00ZARM455UA1E

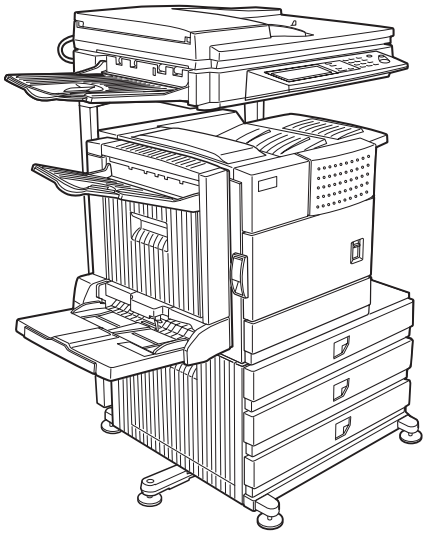

DIGITAL MULTIFUNCTIONAL SYSTEM

MODEL AR-M351U/M451U AR-M355U/M455U

CONTENTS

[1] GENERAL. 1-1
[2] CONFIGURATION 2-1
[3] SPECIFICATIONS 3-1
[4] CONSUMABLE PARTS 4-1
[5] EXTERNAL VIEWS AND INTERNAL STRUCTURES 5-1
[6] UNPACKING AND INSTALLATION 6-1
[7] MAINTENANCE AND DETAILS OF EACH SECTION 7-1
[8] ADJUSTMENTS 8-1
[9] SIMULATIONS 9-1
[10] MACHINE OPERATION 10-1
[11] TROUBLE CODES 11-1
[12] ROM VERSION-UP METHOD 12-1
[13] ELECTRICAL SECTION. 13-1

Parts marked with "⚠" are important for maintaining the safety of the set. Be sure to replace these parts with specified ones for maintaining the safety and performance of the set.

SHARP CORPORATION

This document has been published to be used for after sales service only.
The contents are subject to change without notice.

CAUTION

This product is a class 1 laser product that complies with 21CFR 1040.10 and 1040.11 of the CDRH standard and IEC825. This means that this machine does not produce hazardous laser radiation. The use of controls, adjustments or performance of procedures other than those specified herein may result in hazardous radiation exposure.
This laser radiation is not a danger to the skin, but when an exact focusing of the laser beam is achieved on the eye's retina, there is the danger of spot damage to the retina.
The following cautions must be observed to avoid exposure of the laser beam to your eyes at the time of servicing.

1) When a problem in the laser optical unit has occurred, the whole optical unit must be exchanged as a unit, not as individual parts.
2) Do not look into the machine with the main switch turned on after removing the developer unit, toner cartridge, and drum cartridge.
3) Do not look into the laser beam exposure slit of the laser optical unit with the connector connected when removing and installing the optical system.
4) The middle frame contains the safety interlock switch.
   Do not defeat the safety interlock by inserting wedges or other items into the switch slot.

Cautions on laser

Wave length	785 nm +10 nm −15 nm
Pulse times	North America: 35 cpm model: (6.2 μs ± 6.2 ns)/7 mm 45 cpm model: (4.8 μs ± 4.8 ns)/7 mm Europe: 35 cpm model: (6.2 μs ± 6.2 ns)/7 mm 45 cpm model: (4.8 μs ± 4.8 ns)/7 mm
Output power	0.2 mW - 0.4 mW

At the production line, the output power of the scanner unit is adjusted to 0.4 MILLIWATT PLUS 8 % and is maintained constant by the operation of the Automatic Power Control (APC).

Caution
This product contains a low power laser device. To ensure safety do not remove any cover or attempt to gain access to the inside of the product. Refer all servicing to qualified personnel.

For North America:

SAFETY PRECAUTIONS

This Digital Equipment is rated Class 1 and complies with 21 CFR 1040.10 and 1040.11 of the CDRH standards. This means that the equipment does not produce hazardous laser radiation. For your safety, observe the precautions below.

- Do not remove the cabinet, operation panel or any other covers.
- The equipment's exterior covers contain several safety interlock switches. Do not bypass any safety interlock by inserting wedges or other items into switch slots.

Caution
Use of controls or adjustments or performance of procedures other than those specified herein may result in hazardous radiation exposure.

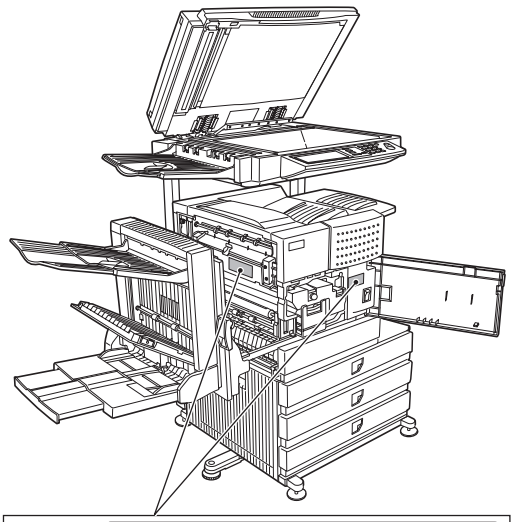

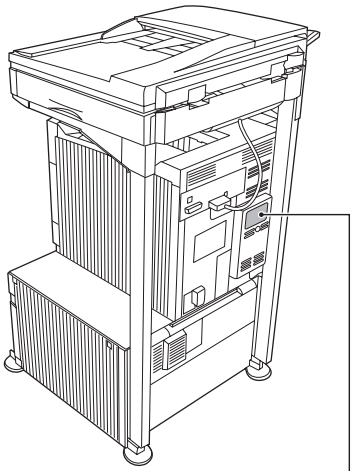

Laserstrahl

CAUTION INVISIBLE LASER RADIATION WHEN OPEN AND INTERLOCKS DEFEATED. AVOID EXPOSURE TO BEAM.
VORSICHT UNSICHTBARE LASERSTRAHLUNG WENN ABDECKUNG GEÖFFNET UND SICHERHEITSVERRIEGELUNG ÜBERERÜCKT. NICHT DEM STRAHL AUSSETZEN.
ADVARSEL USYNLIG LASERSTRÅLING VED ÅBNING, NÅR SIKKERHEDSAFBRYDERE ER UDE AF FUNKTION. UNDGÅ UDSAETTELSE FOR STRÅLNING.
ADVERSEL USYNLIG LASERSTRÅLING NÅR DEKSEL ÅPNES OG SIKKERHEDSLÅS BRYTES. UNNGÅ EKSPONERING FOR STRÅLEN.
VARNING OSYNLIG LASERSTRÅLNING NÄR DENNA DEL ÄR ÖPPNAD OCH SPÄRRAR ÄR URKOPPLADE. STRÅLEN ÄR FARLIG. BETRAKTA EJ STRÅLEN.
VARO! AVATTAESSA JA SUOJALUKITUS OHITETTAESSA OLET ALTTIINA NÄKYMÄTÖNTÄ LASERSÄTEILYLLE. ÄLÄ KATSO SÄTEESEEN.

⚠ 注　意（サービスマン用）

カバーを開けてかつインターロックを無効にした場合には
レーザー光にさらされないようにしてください。

CLASS 1 LASER PRODUCT

LASER KLASSE 1

For Europe:

CLASS 1 LASER PRODUCT

LASER KLASSE 1

LUOKAN 1 LASERLAITE

KLASS 1 LASERAPPARAT

CAUTION
INVISIBLE LASER RADIATION WHEN OPEN INTERLOCKS DEFEATED. AVOID EXPOSURE TO BEAM.

VORSICHT
UNSICHTBARE LASERSTRAHLUNG WENN ABDECKUNG GEÖFFNET UND SICHERHEITSVERRIEGELUNG ÜBERBRÜCKT. NICHT DEM STRAHL AUSSETZEN.

ADVARSEL
USYNLIG LASERSTRÅLNING VED ÅBNING, NÅR SIKKERHEDSBRYDERE ER UDE AF FUNKTION. UNDGÅ UDSAETTELSE FOR STRÅLNING.

VAROITUS!
LAITTEEN KÄYTTÄMINEN MUULLA KUIN TÄSSÄ KÄYTTÖOHJEESSA MAINITULLA TAVALLA SAATTAA ALTISTAA KÄYTTÄJÄN TURVALLISUUSLUOKAN 1 YLITTÄVÄLLE NÄKYMÄTTÖMÄLLE LASERSÄTEILYLLE.

VARNING
OM APPARATEN ANVÄNDS PÅ ANNAT SÄTT ÄN I DENNA BRUKSANVISNING SPECIFICERATS, KAN ANVÄNDAREN UTSÄTTAS FÖR OSYNLIG LASERSTRÅLNING, SOM ÖVERSKRIDER GRÄNSEN FÖR LASERKLASS 1.

CONTENTS

[1] GENERAL

1. Note for servicing 1-1
   A. Cautions for servicing 1-1

[2] CONFIGURATION

1. System configuration 2-1
   A. Basic system 2-1
   B. Option lineup 2-2
   C. List of combination of peripheral devices 2-4

[3] SPECIFICATIONS

1. Basic Specification 3-1
   A. Base Engine 3-1
   B. Document Feeding Equipment 3-2
   C. Output Equipment 3-2
2. Specific Function 3-2
   A. Printer Function 3-2
   B. Image send function 3-5
   C. Copy function 3-7
3. B/W Scanner Module (DSPF). 3-8
4. Rack for Scanner 3-9

[4] CONSUMABLE PARTS

1. Supply system table 4-1
   A. European Subsidiary/East Europe/Russia/ Australia/New Zealand 4-1
   B. Taiwan (Aurora). 4-1
   C. Asia 4-1
   D. Middle East/Africa/Israel/Philippines 4-1
   E. Hong Kong 4-1
   F. China 4-1
2. Maintenance parts list. 4-2
   A. Europe/Australia/New Zealand/Taiwan 4-2
   B. Agency/Asia/Middle East/Africa/ Latin America 4-2
   C. Hong Kong 4-3
   D. China 4-3
2. Production number identification 4-4
   A. Drum cartridge. 4-4
   B. Toner cartridge 4-4
   C. Developer cartridge 4-4
3. Environmental conditions 4-4
   A. Operating conditions 4-4
   B. Storage conditions. 4-4

[5] EXTERNAL VIEWS AND INTERNAL STRUCTURES

1. Exterior 5-1
2. Interior 5-2
3. Operation panel. 5-3
4. Job status screen (common to print, copy, fax, network scan and Internet fax) 5-4
5. Cross sectional view 5-5
   A. Scanner unit. 5-5
   B. Engine 5-5
6. Switch, Sensor 5-6
   A. Scanner unit. 5-6
   B. Engine 5-6
7. PWB 5-7
   A. Scanner unit. 5-7
   B. Engine 5-7
8. Motor, Clutch, Solenoid 5-8
   A. Scanner unit. 5-8
   B. Engine 5-8

[6] UNPACKING AND INSTALLATION

1. Installing procedure flowchart 6-1
2. Note for installation place 6-2
3. Unpacking procedure 6-2
   A. AR-M355U/M455U (North America), AR-M351U/M451U (Europe) 6-2
   B. AR-M351U/M451U (Except for Europe) 6-2
4. Remove the locking tape (AR-M355U/M455U (North America), AR-M351U/M451U (Europe)) 6-3
5. Unpacking and installation of the desk unit 6-3
   A. AR-D28 6-3
   B. AR-D27 6-5
   C. AR-MU2 6-7
6. Unpacking and installation of the rack (AR-RK2) (Except for North America/Europe) 6-9
7. Unpacking and installation of the AR-EF3 (Except for North America/Europe) 6-10
8. Machine installing procedure. 6-11
   A. Setting related to process 6-11
   B. Toner cartridge settings 6-11
   C. Setting related to fusing 6-12
   D. Paper setting 6-12
9. Automatic developer adjustment 6-12
10. Print test 6-13
11. Distortion adjustment (Except for North America/Europe) 6-13
12. Attach the document scanning label 6-13
13. Key sheet attachment 6-13
14. Adjuster installation and adjustment 6-14
15. Using the transport handle 6-14

[7] MAINTENANCE AND DETAILS OF EACH SECTION

[Maintenance System Table] 7-1

1. Engine section 7-1
2. Scanner / DSPF 7-2
3. Peripheral devices 7-3

[DETAILS OF EACH SECTION] 7-4

1. Process section 7-4
   - [OPC drum section] 7-6
   - [Transfer section] 7-11
   - [Developing section] 7-16
2. Fusing section. 7-21
3. Paper feed section 7-26
4. Transport section/Paper exit reverse section 7-33
5. Laser scanner section. 7-43
6. Scanner section 7-46
7. DSPF section 7-54
8. Operation panel section 7-62
9. Filter 7-66
10. Drive section 7-67
11. Power section 7-69
12. PWB 7-72
13. Fan motor 7-74

[8] ADJUSTMENTS

1. Process section 8-1
   - A. Doctor gap adjustment 8-1
   - B. MG roller main pole position adjustment 8-1
   - C. High voltage output adjustment. 8-2
2. Image check, adjustment 8-3
   - A. Adjustments on the engine side 8-3
   - B. Adjustment on the scanner side 8-6
3. Scanner section 8-10
   - A. OC scan distortion adjustment (MB-B rail height adjustment) 8-10
   - B. Vertical image distortion balance adjustment (Copy lamp unit installing position adjustment) 8-11
   - C. Vertical image distortion balance adjustment (No. 2/3 mirror base unit installing and position adjustment) 8-11
   - D. Vertical (sub scanning direction) distortion adjustment [Winding pulley position adjustment] 8-11
   - E. Height adjustment of original detection light emitting unit 8-12
   - F. Original size detection photo sensor check. 8-12
   - G. Original size detection photo sensor adjustment. 8-12
   - H. Image density adjustment 8-13
   - I. DSPF width detection adjustment 8-17

[9] SIMULATION

1. Outline and purpose 9-1
2. Code-type simulation. 9-1
   - A. Operating procedures and operations 9-1
   - B. Simulation list. 9-3
   - C. Details 9-7
3. Other related items 9-87

[10] MACHINE OPERATION

1. Acceptable originals 10-1
   - A. Size and weight of acceptable originals. 10-1
   - B. Total number of originals that can be set in the document feeder tray 10-1
2. Standard original placement orientations 10-1
3. Automatic copy image rotation - rotation copying 10-1
4. Specifications of paper trays 10-2
   - A. Applicable plain paper 10-2
   - B. Applicable special paper 10-3
5. Printing onto envelopes. 10-3
   - A. Fusing unit pressure adjusting levers 10-3

[11] TROUBLE CODES

1. General 11-1
2. Trouble codes list 11-1
3. Details of trouble codes. 11-3
4. Other related items 11-14

[12] ROM VERSION-UP METHOD

1. General 12-1
2. Cautions 12-1
3. Flash ROM update procedures 12-1
   - A. Preliminary arrangement 12-1
   - B. Update procedure 1 (Writing with each ROM inserted to the specified slot) 12-2
   - C. Update procedures 2 (Writing to each ROM by use of CN6 of the controller PWB) 12-2
   - D. In case of “Result: NG” 12-3
   - E. Turning off the power during update 12-3
   - F. Update window display in normal booting 12-3
   - G. Update process flow 12-3

[13] ELECTRICAL SECTION

1. Block diagram 13-1
2. Actual wiring chart. 13-2
3. Signal name list. 13-19

[1] GENERAL

1. Note for servicing

Pictogram

This Service Manual uses some pictographs to assure safe operation.

Please understand the meanings of pictographs before servicing.

CAUTION: If this CAUTION is ignored, an injury or damage to property could occur.

A. Cautions for servicing

1) Do not touch the photoconductive drum. Scratches or smudges on the drum will cause dirty printouts.
2) The fusing unit is extremely hot. Exercise care in this area.

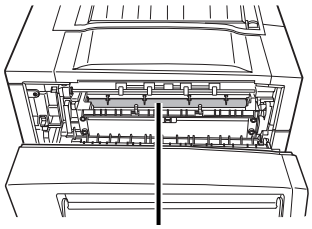

3) Do not look directly at the light source of the scanner module. Doing so may damage your eyes.
4) Five adjusters are provided on all optional stand/paper drawer units. These adjusters should be lowered until they contact the floor.

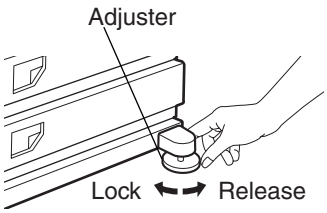

5) Do not make any modifications to this machine. Doing so may result in personal injury or damage to the machine.
6) Since this machine is heavy, it is recommended that it be moved by more than one person to prevent injury.
7) When connecting this machine to a computer, be sure to first turn both the computer and the machine off.
8) Do not print anything which is prohibited from printing by law. The following items are normally prohibited from printing by national law. Other items may be prohibited by local law.
   - Money
   - Stamps
   - Bonds
   - Stocks
   - Bank drafts
   - Checks
   - Passports
   - Driver's licenses
9) Do not throw toner or a toner cartridge into fire. Toner may be spattered, causing a burn.
10) Store toner or toner cartridges in a hard-to-reach place for children.

[2] CONFIGURATION

1. System configuration

A. Basic system

AR-M351U/M451U (Copier/Printer model)	AR-M355U/M455U (Copier model)
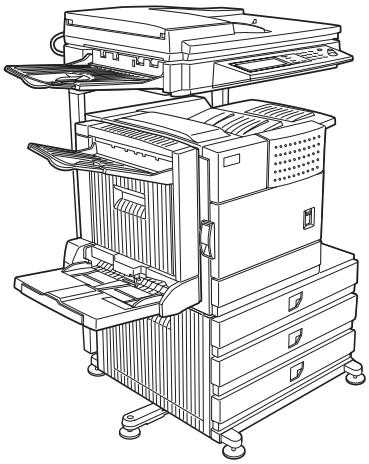	
Necessary options • Any one of the stand/MPD & 2000 sheet paper drawer (AR-D28), the stand/3 x 500 sheet paper drawer (AR-D27), or the multi purpose drawer (AR-MU2)* • Any one of the upper exit tray extension (AR-TE4), the finisher (AR-FN6), the mail-bin stacker (AR-MS1), or the right upper exit tray (AR-TE5) • AR-EF3 • AR-RK2	

* To install the AR-MU2, the exclusive-use desk is required.

B. Option lineup

For combinations of options, refer to "C. List of combination of peripheral devices" described later.

(1) Major options

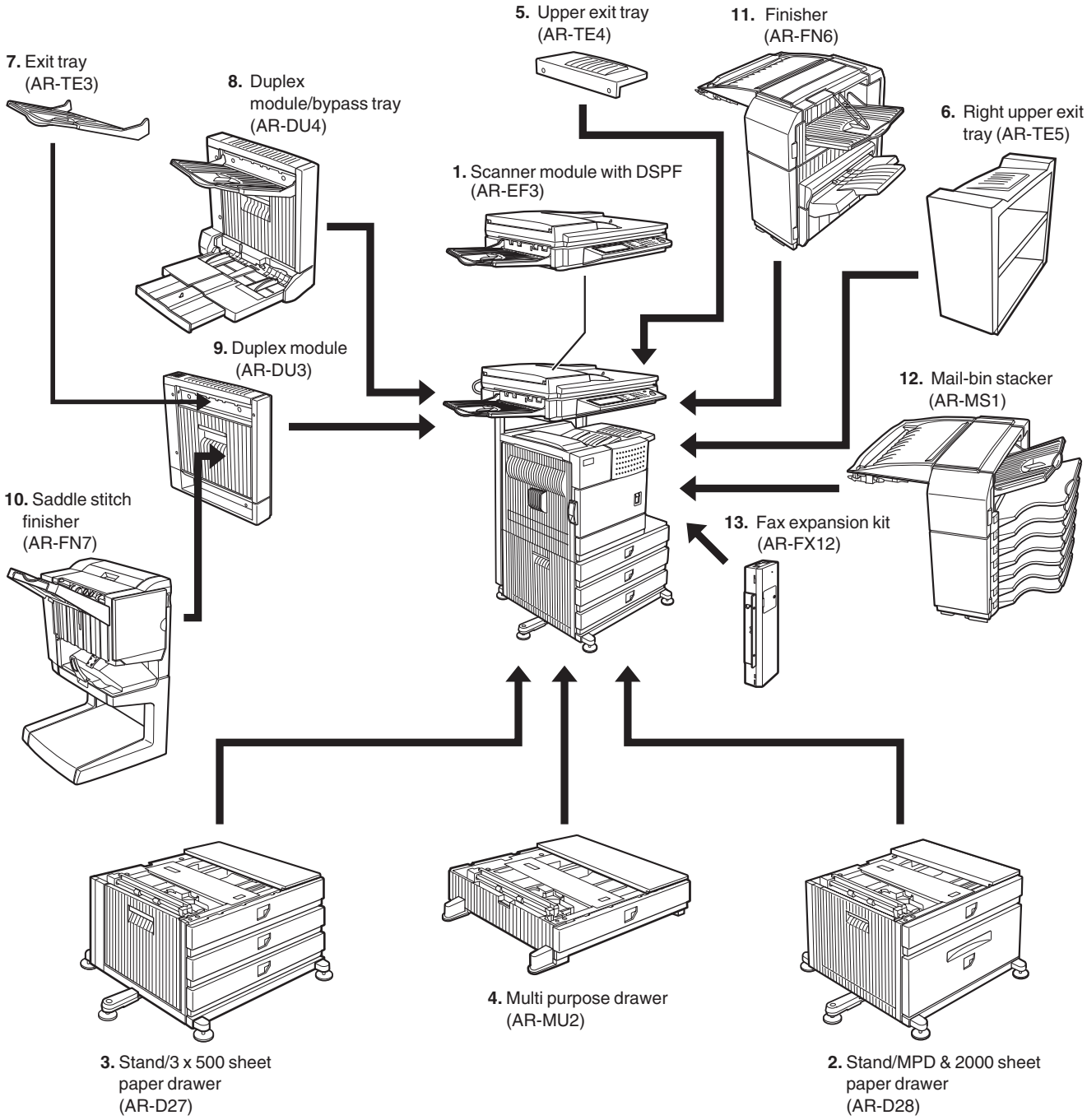

No.	Option item		Installing conditions
1	Scanner module with DSPF	AR-EF3	
2	Stand/MPD & 2000 sheet paper drawer	AR-D28	• Simultaneous installation with the large capacity paper feed desk (AR-D28) or the 3-stage paper feed desk (AR-D27) is inhibited.
3	Stand/3 x 500 sheet paper drawer	AR-D27	
4	Multi purpose drawer	AR-MU2	
5	Upper exit tray	AR-TE4	• Required when the finisher (AR-FN6) or the mail-bin stacker (AR-MS1) is not installed.
6	Right upper exit tray	AR-TE5	
7	Exit tray	AR-TE3	• Required when the duplex module (AR-DU3) is installed and the saddle stitch finisher (AR-FN7) is not installed.
8	Duplex module/bypass tray	AR-DU4	• Any one of the multi purpose drawer (AR-MU2), the stand/3 x 500 sheet paper drawer (AR-D27), or the stand/MPD & 2000 sheet paper drawer (AR-D28) is required. • The duplex module/bypass tray (AR-DU4) cannot be installed with the exit tray (AR-TE3) or the saddle stitch finisher (AR-FN7). • When the duplex module (AR-DU3) is installed, the exit tray (AR-TE3) or the saddle stitch finisher (AR-FN7) is required.
9	Duplex module	AR-DU3	
10	Saddle stitch finisher	AR-FN7	• Simultaneous installation with the finisher (AR-FN6) is inhibited. • The duplex module (AR-DU3) is required. • The stand/3 x 500 sheet paper drawer (AR-D27) or the stand/MPD & 2000 sheet paper drawer (AR-D28) is required.
11	Finisher	AR-FN6	• Simultaneous installation with the saddle finisher (AR-FN7) is inhibited. • Any one of the multi paper drawer (AR-MU2), the stand/3 x 500 sheet paper drawer (AR-D27), or the stand/MPD & 2000 sheet paper drawer (AR-D28) is required.
12	Mail-bin stacker	AR-MS1	• Any one of the multi paper drawer (AR-MU2), the stand/3 x 500 sheet paper drawer (AR-D27), or the stand/MPD & 2000 sheet paper drawer (AR-D28) is required.
13	Fax expansion kit	AR-FX12	• The stand/3 x 500 sheet paper drawer (AR-D27), or the stand/MPD & 2000 sheet paper drawer (AR-D28) is required.

(2) Other options

❍: Installable ×: Not available

Option item			Main unit		Installing conditions
			AR-M351U/ M451U	AR-M355U/ M455U	
Paper exit unit	Punch unit	AR-PN1	❍	❍	For saddle stitch finisher (AR-FN7)
Function expansion options	Printer expansion kit	AR-P20	×	❍	
	Printer expansion kit (with HDD)	AR-P21	×	❍	
	Printer server card	AR-NC7	❍	×	
	Printer server card (with HDD)	AR-NC8	❍	×	
	PS3 expansion kit	AR-PK6	❍	❍	
	Network scanner expansion kit	AR-NS3	❍	❍	
	Sharpdesk 1 license kit	AR-U11M	❍	❍	For network scanner expansion kit (AR-NS3)
	Sharpdesk 5 license kit	AR-U15M	❍	❍	
	Sharpdesk 50 license kit	AR-U1AM	❍	❍	
	Sharpdesk 100 license kit	AR-U1BM	❍	❍	
	Data security kit	AR-FR22/FR22U	❍	❍	
	Data security kit	AR-FR21/FR21U	❍	❍	When the AR-P21 or the AR-NC8 is installed.
	Bar code font	AR-PF1	❍	❍	
	Flash ROM kit	AR-PF2	❍	❍	Cannot be installed together with the AR-P21 or the AR-NC8.
FAX-related option	Fax memory (8 MB)	AR-MM9	❍	❍	For fax expansion kit (AR-FX12)

C. List of combination of peripheral devices

As shown in the table below, some other peripheral devices (B) may be needed for installation of a peripheral device (A) and some peripheral devices cannot be installed together.

A		B: Multi purpose drawer	Stand/3 x 500 sheet paper drawer	Stand/MPD & 2000 sheet	Duplex module/bypass tray	Duplex module	Scanner module with DSPF	Saddle stitch finisher	Finisher	Mail-bin stacker	Exit tray	Upper exit tray	Right upper exit tray	Punch unit	Printer expansion kit	Printer expansion kit (with HDD)	Print server card	Print server card (with HDD)	PS3 expansion kit	Network scanner expansion kit	Facsimile expansion kit	Fax memory (8 MB)	Bar code font	Flash ROM kit	Data security kit (AR-FR22)	Data security kit (AR-FR22U)	Data security kit (AR-FR21)	Data security kit (AR-FR21U)
Related to paper feed unit																												
Multi purpose drawer	AR-MU2	—	×	×																								
Stand/3 x 500 sheet paper drawer	AR-D27	×	—	×																								
Stand/MPD & 2000 sheet paper drawer	AR-D28	×	×	—																								
Duplex module/bypass tray	AR-DU4	○*1			—			×						×														
Duplex module	AR-DU3	○*1				—																						
Scanner module with DSPF	AR-EF3	○*1					—																					
Output units																												
Saddle stitch finisher	AR-FN7	×	○*1		×	○		—	×		×																	
Finisher	AR-FN6	○*1						×	—	×		×		×														
Mail-bin stacker	AR-MS1	○*1							×	—		×																
Exit tray	AR-TE3				○*1			×	×	×	—			×														
Upper exit tray	AR-TE4								×	×		—																
Right upper exit tray	AR-TE5												—															
Punch unit	AR-PN1	×	○*1		×	○		○	×		×			—														
Related to extension of functions and others																												
Printer expansion kit	AR-P20														—	×	×	×										
Printer expansion kit (with HDD)	AR-P21														×	—	×	×										
Print server card	AR-NC7														×	×	—	×										
Print server card (with HDD)	AR-NC8														×	×	×	—										
PS3 expansion kit	AR-PK6															○*1			—									
Network scanner expansion kit	AR-NS3	×	○*1				○									○				—								
Facsimile expansion kit	AR-FX12	×	○*1				○														—							
Fax memory (8 MB)	AR-MM9	×	○*1																		○	—						
Bar code font	AR-PF1														○*1								—					
Flash ROM kit	AR-PF2														○	×		×						—				
Data security kit	AR-FR22															×		×							—		×	×
Data security kit	AR-FR22U															×		×								—	×	×
Data security kit	AR-FR21														×		×								×	×	—	
Data security kit	AR-FR21U														×		×								×	×		—

○ = Must be installed together.
○*1 = Any of the units must be installed together.
× = Cannot be installed together.

[3] SPECIFICATIONS

1. Basic Specification

A. Base Engine

(1) Form

Console type

(2) Engine speed

Paper size	AR-M351U/ M355U	AR-M451U/ M455U
A4, 8.5" x 11"	35ppm (31ppm*)	45ppm (40ppm*)
A4R, 8.5" x 11"R	25ppm	30ppm
A5R/5.5" x 8.5"R, Invoice-R	35ppm	45ppm
B5	35ppm	45ppm
B5R, Executive-R	25ppm	30ppm
B4/8.5" x 14"	20ppm	22ppm
A3/11" x 17"	17ppm	20ppm
8K	17ppm	20ppm
16K	35ppm	45ppm

* Paper feed from Manual bypass tray

(3) Engine composition

Photoconductor type	OPC (diameter of photoconductor : ø30mm)
Record method	Electro-photograph (laser)
Development method	Dry-type dual-component magnetic brush development
Charge method	Charged saw-tooth method
Transfer method	Transfer roller
Cleaning method	Counter blade
Fusing method	Heat roller

(4) Engine resolution

Resolution	Read: 600dpi Write: 600dpi
Smoothing	Write: 1200dpi equivalent
Gradation	Write: 2 levels

(5) Printable area

The print area of this product is shown below.

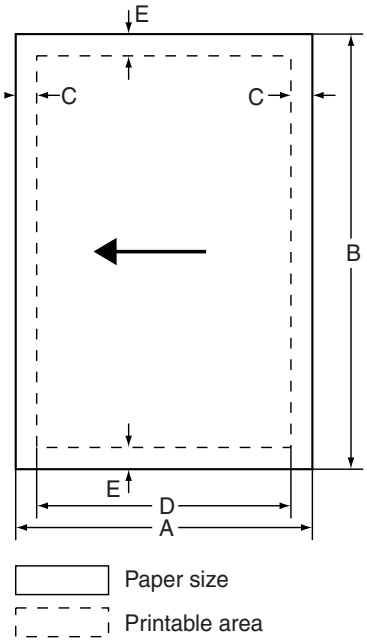

If a printer driver for Windows or Macintosh is used for printing, the printable area will be smaller. The actual printable area depends on the printer driver to be used.

(in mm)

Paper size	A	B	C	D	E
A3	297	420	4	289	4
B4	257	364	4	242	4
A4	210	297	4	202	4
B5	182	257	4	168	4
A5	148	210	4	140	4
Japanese postcard	100	148	4	92	4
Ledger	279	432	4	271	4
Legal	216	356	4	208	4
Foolscap	216	330	4	208	4
Letter	216	279	4	208	4
Executive	184	267	4	183	4
Invoice	140	216	4	132	4
Com-10 (envelope)	105	241	4	97	4
C5 (envelope)	162	229	4	154	4
Monarch (envelope)	98	191	4	90	4
DL (envelope)	110	220	4	102	4
ISO B5 (envelope)	176	250	4	168	4

(6) Warm-up

Warm-up time	less than 80 seconds
Pre-heat requirement	Required
Jam recovery time	Target: about 30 seconds (Under standard condition of 60 seconds left after side cover opening, polygon motor halt)

(7) Power source

Voltage	100V system	200V system
	100-127V	220-240V
Frequency	50/60Hz	
Power cord	Inlet type	

(8) Power consumption

		AR-M351U/ M355U	AR-M451U/ M455U
Max. Power consumption	Except for Taiwan	1440W	1440W
	Taiwan	1550W	1550W
	200V	1850W	1850W

(9) Energy Star benchmark

	AR-M351U/M355U	AR-M451U/M455U
Low power mode	184.75W	223.25W
Recovery time from low power mode	Max. 30 sec.	Max. 30 sec. (Recommendation)
Sleep mode	Less than 80W	Less than 95W
Transition time to sleep mode	60 min.	60 min.

(10) Noise

At working	less than 6.8dB
At waiting mode	less than 5.0dB

∗ Showing noise benchmark in each model as a whole system.

(11) Dimensions

External dimensions (W x D x H)	37.9" x 26.2" x 44.4" (963 mm x 665 mm x 1127 mm) (including automatic document feeder)
Occupied space dimensions (W x D)	37.9" x 26.2" (963 x 665 mm) (Include automatic document feeder)
Weight	Engine: Approx. 85.8 lb (38.9 kg) Desk: Approx. 72.6 lb (32.9 kg) Rack: Approx. 16 lb (7.4 kg) DSPF: Approx. 46 lb (21 kg)

B. Document Feeding Equipment

(1) One-drawer tray (included in the base engine)

Paper feed method	One-drawer tray
Sizes to be fed	A4, B5, 8.5" x 11"
Paper capacity	500 sheets (at 80g/m²)
Media available for paper feeding	Plain paper 60 - 105g/m², 16 - 28lbs
Paper type	Plain, recycled, pre-printed, pre-punched, color, letter head
Paper size switching	To be switched by user (paper size to be entered from the operation panel).
Dehumidification heater	Not provided
Balance detection	Provided (paper empty and 3 steps)
Default size setting	100V system
	8.5" x 11"
Mounting/demounting of the tray	Provided

C. Output Equipment

(1) Face-down Exit Tray (included in the base engine)

Output position/ method	Face-down output at the upper side of main unit
Output paper capacity	400 sheets (80g/m² sheet)
Output paper size	A3, B4, A4, A4R, B5, B5R, A5R 11 " x 17", 8.5" x 14", 8.5" x 13", 8.5" x 11", 8.5" x 11"R, 5.5" x 8.5"R Executive, Japanese post card, Monarch (98 x 191), 8K, 16K, 16KR Com-10 (105 x 241), DL (110 x 220), C5 (162 x 229), ISO B5 (176 x 250)
Spec of media for paper output	Tracing paper: 52 ~ 59g/m² / 14 ~ 15lbs Plain paper: 60 ~ 128g/m² / 16 ~ 34lbs Index paper: 176g/m² / 47lbs Cover paper: 205g/m² / 54 ~ 55lbs Transparency firm
Remaining paper detection	Not provided
Exit tray full detection	Provided

2. Specific Function

A. Printer Function

To enable the printer function of the AR-M355U/M455U, the printer expansion kit must be installed.

(1) Platform

IBM PC/AT (Include compatible machine) Macintosh

(2) Support OS

Custom PS	Windows 95/98/Me
	Windows NT 4.0 (Service Pack5 or later) Windows Server 2003 Windows 2000 Server Windows 2000 Windows XP
Custom PCL5e/6(XL)	Windows 95/98/Me
	Windows NT 4.0 (Service Pack5 or later) Windows Server 2003 Windows 2000 Server Windows 2000 Windows XP
PPD	Windows 95/98/Me
	Windows NT 4.0 (Service Pack5 or later) Windows Server 2003 Windows 2000 Server Windows 2000 Windows XP
	MacOS 8.6 - 9.2.2, 10.1.5, 10.2 - 10.2.8 (except for Mac OS 10.2.2), 10.3-10.3.3

(3) PDL emulation

PCL6 compatible, PCL5e compatible, PostScript 3 compatible

(4) Windows driver function

a. General

Function	PCL5e	PCL6	PS	PPD file *1 (for Windows XP)
Copies	1-999			
Orientation	Portrait Landscape			Portrait Landscape-A Landscape-B (*2)
Duplex	1-sided 2-sided (Left /top/ right binding)			1-sided 2-sided (Long / short binding) (*2)
Booklet	Invoice on Letter Letter on Ledger A5 on A4 A4 on A3 B5 on B4 Letter on Letter Ledger on Ledger A4 on A4 A3 on A3 B4 on B4			Yes (2up booklet only) (*2)
Binding edge	Left / top / right			–
N-up	2/4/6/8/9/16			2 / 4 / 6 / 9 / 16 (*2)
N-up order	Z / Reversed Z / N / Reversed N			Z (*2)
N-up border	Yes / No			Always Yes (*2)

*1: For printing, PS driver bundled with the Windows is required.

*2: Since the function is of PS driver bundled with Windows, specification may vary according to the OS.

b. Paper Input

Function	PCL5e	PCL6	PS	PPD file *1 (for Windows XP)
Paper size	A3 / B4 / A4 / B5 / A5 / Ledger / Legal / Foolscap / Letter / Executive /Invoice/8k / 16k /COM10/C5/ Monarch/DL			
Paper type	Plain Letter Head Pre-Print Pre-Punch Recycle Color Label Heavy Paper Transparency Envelope			
Custom paper type	7 type			–
Source selection	Automatic Tray 1/2/3/4 Bypass-tray			
Cover	Yes/No User can select from 1-sided/2-sided/ No print			–
Insert page	Yes/No User can select from 1-sided/2-sided/ No print			–
Transparency inserts	No Yes (Blank) Yes (Printed)			–

*1: For printing, PS driver bundled with the Windows is required.

c. Paper Output

Function	PCL5e	PCL6	PS	PPD file *1 (for Windows XP)
Output tray selection	Center tray			
	Finisher • Top tray • Offset tray			
	Saddle Stitch Finisher • Offset tray			
	Mailbin stacker • Mailbin top tray • Mailbin (1-7)			
	Duplex module • Left tray			
Staple	Finisher • No staple • 1 staple • 2 staples			
	Saddle Stitch Finisher • No staple • 1 staple • 2 staples			Saddle Stitch Finisher • No staple • 1 staple • 2 staples
Offset cancel	Yes/No			

*1: For printing, PS driver bundled with the Windows is required.

d. Graphic

Function	PCL5e	PCL6	PS	PPD file *1 (for Windows XP)
Resolution setting	600/300 dpi		600dpi	600dpi
Halftone setting	–	No	Screen frequency 8.0 to 360.0 in 0.1 steps Screen angle 0.0 to 360.0 in 0.1 steps	–
Graphics mode	Raster HP-GL2	Raster Vector	–	–
Smoothing	Yes/No			
Toner save	Yes / No			
Photo enhancement	–	Yes/No	–	–
Negative image	–	–	Yes / No	
Mirror image	–	–	Horizontal Vertical	Horizontal (*2)
Zoom	–	–	25-400% (XY zoom)	1-1000% (*2)
Fit to page	Yes / No			–

*1: For printing, PS driver bundled with the Windows is required.

*2: Since the function is of PS driver bundled with Windows, specification may vary according to the OS.

e. Font

Function	PCL5e	PCL6	PS	PPD file *1 (for Windows XP)
Download font	Bitmap TrueType		Bitmap Type1 TrueType	Auto Outline Bitmap Native TrueType (*2)

*1: For printing, PS driver bundled with the Windows is required.

*2: Since the function is of PS driver bundled with Windows, specification may vary according to the OS.

f. Others

Function	PCL5e	PCL6	PS	PPD file *1 (for Windows XP)
Configuration setting	Yes			
Watermark	Yes			Yes (functionality is limited)
Line width setting	–			
Form overlay	Yes			–
Print hold	Yes			–
Confidential print	Yes			–
Sample print	Yes			–
Print accounting	Yes			–
Quick sets	Yes			–
Auto configuration	Yes			–
Job end notification	Yes			–
Tandem print	Yes (The AR-P20/P21 or the AR-NC7/NC8 is required.)			
Carbon print	Yes			–
Multi-enlargement	–			
XY zoom	–		Yes	–

Function	PCL5e	PCL6	PS	PPD file *1 (for Windows XP)
Cover insert + pamphlet	Yes			–
Document filing	Yes (The AR-P21 or the AR-NC8 is required.)			–

*1: For printing, PS driver bundled with the Windows is required.

(5) Macintosh driver functions

a. General

Function	Macintosh PPD file (for Mac OS X ver10.2.8)
Copies	1-999
Orientation	Portrait Landscape-A Landscape-B (*1)
Duplex	1-sided 2-sided Pamphlet (Right /left /top binding)
Booklet	Yes
N-up	2/4/6/9/16 (*1)
N-up order	Z / reversed Z / N / reversed N (*1)
N-up border	None / Single hairline / Single thin line / Double hairline / Double thin line (*1)

*1: Since the function is of PS driver bundled with Macintosh, specification may vary according to the OS.

b. Paper input

Function	Macintosh PPD file (for Mac OS X ver10.2.8)
Paper size	A3 / B4 / A4 / B5 / A5 / Japanese Postcard / Ledger / Legal / Foolscap / Letter / Executive / Invoice/ 8K / 16K/ COM10/C5/Monarch/DL
Paper type	Plain / Letter Head / Pre-Print / Pre-Punch / Recycle / Color / Label / Heavy Paper / Transparency / Envelope
Custom paper type	7
Source selection	Automatic Tray 1/2/3/4 Bypass-tray
Different 1st page	Yes / No (*1)
Cover / insert page	– (On OS9, user can select from: No/First Page/Last Page) (*1)
Transparency inserts	No Yes (Blank) Yes (Printed)

*1: Since the function is of PS driver bundled with Macintosh, specification may vary according to the OS.

c. Paper output

Function	Macintosh PPD file (for Mac OS X ver10.2.8)
Output tray selection	Center tray
	Finisher • Top tray • Offset tray
	Saddle Stitch Finisher • Offset tray
	Mailbin stacker • Mailbin top tray • Mailbin (1-7)
	Duplex module • Left tray
Staple	Finisher • No staple • 1 staple • 2 staples
	Saddle Stitch Finisher • No staple • 1 staple • 2 staples
Offset	Yes/No

d. Graphic

Function	Macintosh PPD file (for Mac OS X ver10.2.8)
Resolution setting	600dpi
Halftone setting	–
Graphics mode	–
Smoothing	Yes/No
Toner save	Yes / No
Photo enhancement	Yes/No
Negative image	–
Mirror image	–
Zoom	1-100000 (*1)
Fit to page	–

*1: Since the function is of PS driver bundled with Macintosh, specification may vary according to the OS.

e. Font

Function	Macintosh PPD file (for Mac OS X ver10.2.8)
Download font	– (Selectable only on MacOS9.x.x - LaserWriter) (*1)

f. Others

Function	Macintosh PPD file (for Mac OS X ver10.2.8)
Configuration setting	Yes
Watermark	Yes
Form overlay	–
Print hold	Yes
Confidential print	Yes (PIN selection)
Sample print	Yes
Print accounting	Yes
Quick sets	–
Auto configuration	– (OS9: Yes)
Job end notification	–
Tandem print	Yes (The AR-P20/P21 or the AR-NC7/NC8 is required. (option))
Carbon print	–
Multi-enlargement	–
XY zoom	–
Cover insert + pamphlet	–
Document filing	Yes (*1) (Only when the AR-P21 or the AR-NC8 is installed. (option))

*1: Since the function is of PS driver bundled with Macintosh, specification may vary according to the OS.

(6) Compatibility

PCL 5e compatibility	Target for PCL5e is to be compatible with HP LaserJet 4050. Small margin difference, rendering difference by different font family, default and transfer function difference is not to be included in the compatibility. All the PJL commands are not necessarily included in the compatibility.
PCL6 compatibility	Target for PCL6 is to be compatible with HP LaserJet 4050. Small margin difference, rendering difference by different font family, default and transfer function difference is not to be included in the compatibility. All the PJL commands are not necessarily included in the compatibility.
PostScript Compatibility	PostScript is targeted to be compatible with Adobe PostScript as performed in HP LaserJet 4050. Small margin difference, rendering difference by different font family, default and transfer function difference is not to be included in the compatibility.

B. Image send function

(1) Mode

Scanner (Scan to E-mail, Scan to Sharpdesk, Scan to FTP, Scan to HDD *), FAX, Internet FAX *

*: The HDD (AR-P21 or AR-NC8) is required.

(2) Support system

Mode	Scanner	Internet FAX	FAX
Supported server	SMTP server FTP server	POP server SMTP server ESMTP server	–

(3) Support image

Mode	Scanner	Internet FAX	FAX
Format	TIFF, PDF	TIFF-F, TIFF-FX	–
Compression method	Uncompressed, G3 (1-dimension) *1, G4 *3 *1 G3 (1-dimension) = MH (Modified Huffman) *3 G4 = MMR (Modified MR)	MH, MMR	MH, MR, MMR, JBIG

(4) Image process

Mode	Scanner	Internet FAX	FAX
Half tone reproduction	Equivalent to 256 levels		
Exposure adjustment	Auto + 5 steps		
Quality selection	Half-tone ON/OFF (It's not effective for the following resolution with *.)		
Resolution (Varies with the file type/ transmission method)	200 x 200dpi *	200 x 100dpi *	Normal (203.2 x 97.8dpi) *
	300 x 300dpi	200 x 200dpi	Small letter (203.2 x 195.6dpi)
	400 x 400dpi	200 x 400dpi	Fine (203.2 x 391dpi)
	600 x 600dpi	400 x 400dpi	Extra fine (406.4 x 391dpi)
	–	600 x 600dpi	–

(5) Specified destination

Mode	Scanner	Internet FAX	FAX
LDAP	Yes (Also can be stored in one-touch address.)		
Specified destination	Specifying by one-touch or group, manual destination entry		
One-touch keys (Max. number of keys to be stored.)	Max. 500 (999 *1) destinations In this, FTP and Desktop are 100 (200 *1) destinations.		
Group*	To be registered from one-touch and manual destination entry 300 (500 *1)		
Program	Yes (8 programs)		
Manual destination entry	Soft Keyboard		Input via the numeric keys, # key and * key.
Chain dialing (Manual destination entry)	–		Up to 64-digit with pause key
Resend	This is used to recall the last destination.		
Speed dialing	This is used to recall address control number by using numeric keys.		

*1: When HDD is installed.

(6) Specified multiple destinations

Mode	Scanner	Internet FAX	FAX
Specified destination	Specifying by one-touch or group, manual destination entry.		
Max. number of Manual destination entry*	Total of 100 (5000 *1) destinations including group and relay broadcast.		
Sequential broadcasting	Yes (E-mail only. It is not available for FTP/Desktop.)		Yes
Simultaneous FAX transmission	–		Yes

*1: When HDD is installed.

* Manual destination entry: Entry other than One-touch, using numeric keys or soft keyboard.
* In the case of broadcast transmission including fax destination, the resolution level for fax mode is applied.
* In the case of broadcast transmission with Internet FAX and Scanner destinations, the resolution level of Internet FAX mode is applied.
* In the case of broadcast transmission, the compression format set with the key operator programs is applied.

(7) Functions

Mode			Scanner	Internet FAX	FAX
Transmit function	Memory transmit		– Data is sent by memory transmit when upper limit is set.	Yes	
	On-hook		–		Yes
	Quick online transmit		–		Yes
	Direct transmit		–		At on-hook only
	Auto reduction transmit		–		Yes: A3 → B4, A3 → A4, B4 → A4
	Rotation transmit		Yes		
	Scaling transmit		Yes (Scaling from regular size to regular size only. Some functions does not allow rotation transmit)		
	Re-call mode	Error	–	Yes	
		Busy	–	–	Yes
			No. of times/interval is set via key operator program.		
	Book original transmit		Yes		
	Long length original transmit		Yes	Yes	Yes
			Max. 800mm		
	Specified pages per file		Yes	–	
	Maximum number of send data		Yes		–
	Sender name		Max.500 (999 *1) destinations		

*1: When HDD is installed.

Mode		Scanner	Internet FAX	FAX
Receive function	Auto receive	–	Yes	
	Manual receive	–	Yes	
	Memory receive	–	Yes	
	Reduction receive for standard size	–	Yes	
	Scaling receive for specified size	–		
	Rotation receive	–	Yes	
	Divided receive	–	Yes: To be defined by key operator program	
	Duplex receive	–	Yes: To be defined by key operator program	
	2 in 1 receive	–		
	Address/Domain-specified reception is enabled.	–	Yes 50 address	–
	Address/Domain-specified reception is disabled.	–	Yes 50 address	Only the specified number
	External phone connection	–		Yes
	Answering phone connection	–		No
	Transfer function at output trouble	–	Yes	
	Auto startup mode	–	Yes	
Special function	Time setting	Yes		
	Transmit request	–		Yes
	Remote transmit	–		Yes
	Cover function	–		No
	Print at sender	–	Yes	–
	Page division	Yes		
	Page combination	No		
	Confidential (machine at the other end)	–		Yes (F code method)
	Transmit broadcast direction	–		Yes (F code method)
	Transmit message	–		
	Edge erase	Yes		
	Center erase	Yes		
	2 in 1	Yes		
	Card shot	Yes		
Report/ List function	Transmit/receive record	Yes		
	Transmit/receive result	No	Yes	
	Address/phone directory list	Yes		
	Group list	Yes		
	ID/Sender's address list)	–		
	Sender list	Print administrator address.	No Described in the key operation list	
	Confidential box check list	–		Yes (Integrated to the memory box list)
	Transmit group list	–		Yes (Integrated to the memory box list)
	Program list	Yes		
	Reserved transmit list	–		
	Memory box list	–		Yes (FAX mode only)
	Memory clear notice list	– (It's possible that this is output in case of errors.)		
Others	PC-facsimile transmission	–	PC-iFAX	PC-FAX

(8) Transmission method

Mode	Scanner	Internet FAX	FAX
Transmission time	–		2 seconds (level: Super G3/JBIG) 6 seconds (G3 ECM)
Modem speed	–		33.6kbps → 2.4kbps automatic fallback
Intercommunication	–		Super G3/G3
Communication line	–		General telephone line (PSTN), Private branch exchange(PBX), FAX line
ECM	–		Yes

(9) Record size

Mode	Scanner	Internet FAX	FAX
Max. record width	293mm		
Record size	–	A3-A5, 11" x 17"-5.5" x 8.5"	A3-A5, 11" x 17"-5.5" x 8.5"

(10) F code transmission

Mode	Scanner	Internet FAX	FAX
Sub address	–		Yes
Passcode	–		Yes

C. Copy function

(1) Copy Speed

	AR-M351U/M355U			AR-M451U/M455U		
	Actual	Reduction	Enlargement	Actual	Reduction	Enlargement
A4, 8.5" x 11"	35	35	35	45	45	45
A4R, 8.5" x 11"R	25	25	25	30	30	30
A5R, 5.5" x 8.5"R, Invoice-R	35	35	35	45	45	45
B5	35	35	35	45	45	45
B5R, Executive-R	25	25	25	30	30	30
B4, 8.5" x 14"	20	20	20	22	22	22
A3, 11" x 17"	17	17	17	20	20	20
Extra, Envelope	17	17	17	20	20	20

∗ Figures in reduction/enlargement are represented by those at the ratio to show slowest speed

(2) First copy time

Conditions: A4 or 8.5"x11" from front tray of PPC, with polygon motor running.

	AR-M351U/M355U	AR-M451U/M455U
Document glass *1	Less than 4.9 seconds	Less than 4.4 seconds
DSPF	Less than 6.0 seconds	Less than 5.3 seconds

*1: During OC mode

(3) Job speed

	AR-M351U/M355U	AR-M451U/M455U
S→ S *1	33 cpm (94%)	42 cpm (93%)
S→ D *2	32 cpm (91%)	40 cpm (88%)
D→ D *3	32 cpm (91%)	40 cpm (88%)

*1: S → S : A4 / 8.5" x 11" original 5 sheets copy 5sets
*2: S → D : A4 / 8.5" x 11" original 10 sheets copy 5sets
*3: D → D : A4 / 8.5" x 11" original 5 sheets (10 pages) copy 5sets

(4) Continuous copy

Max. multiple number	999 pages

(5) Copy Ratio

Copy ratio	AB series : 25%, 50%, 70%, 81%, 86%, 100%, 115%, 122%, 141%, 200%, 400% Inch series : 25%, 50%, 64%, 77%, 100%, 121%, 129%, 200%, 400%
Zoom	25 - 400% 25 - 200% (Copy from DSPF)
Independent scaling	4

(6) Exposure/Copy Quality Process

Exposure mode	Binary: Text(auto/manual), Text/photo, Photo 256 levels: Not provided
Manual steps	9 steps
Toner save mode	Yes (Except for U.K.), Default: OFF

(7) Copy Function

Function	APS	Yes
	AMS	Yes
	XY zoom	Yes
	Paper type select	Yes (By type setting)
	Auto tray switching	Yes
	Rotation copy	Yes
	Electronic sort	Yes
	Rotation sort	No
	Reserved copy	Yes
	Prior tray setting	No
	Recall/register of program	Yes
	Document filing	Yes (The AR-P21 or the AR-NC8 is required.)
	Proof copy	No
	Preheat function	Yes (To be set up by the key operator program)
	Auto power shut-off function	Yes (To be set up by the key operator program)
	Account control	Yes 500 accounts
	Process control	Yes
	Tandem copy	Yes (via network) (The AR-P20/P21 or the AR-NC7/NC8 is required.)
	Tab copy	No
	Book copy	Yes
	Irregular original size input	Yes
	Irregular paper size input	Yes

Special function	Margin shift	Yes
	Edge erase/Center erase	Yes
	Dual page copying	Yes
	Covers/Inserts	Yes
	Transparency insert	Yes
	Centering	No
	Multi shot (Nin1)	Yes (2 in 1 / 4 in 1) (Centering: Yes)
	Card shot	Yes
	Pamphlet copy	Yes (Centering: Yes)
	2-sided copy orientation change	Yes
	Job build	Yes (max.10000 sheets)
	Negative image	Yes
	Shading	No
	Mirror image	Yes
	Multi-page enlargement	No
	Repeat	No
	Date stamp	Yes
	Stamp	Yes
	Character stamp	Yes
	Page stamp	Yes

Yes: Standard Function

No: Not provided

3. B/W Scanner Module (DSPF)

(1) Form

Scanner (Document glass) / DSPF standard
Operation panel integral type
(common hardware for all the destinations)

(2) Resolution / Gradation

Reading resolution (dpi)						
	Copy mode					
	Magnification	25 - 99	100	101 - 200	201 - 400	–
	OC	600x600	600x600	600x600	600x600	–
	OC (High speed): Text/Auto	600x600	600x600	600x600	600x600	–
	OC (High speed): Others	600x600	600x300	600x600	600x600	–
	DSPF/SPF (standard)	600x300	600x300	600x600	-	–
	DSPF/SPF (high quality)	600x600	600x600	600x600	-	–
Input and transmitting resolution (dpi)						
	FAX transmit mode and scanner/fax multicasting mode					
	Selection mode	Standard	Fine	Super fine	Ultra fine	600dpi sending
	Input resolution: OC	600 x391.2	600x391.2	600x391.2	600x391.2	–
	Input resolution: DSPF	600x300	600x300	600x300	600x300	–
	Transmitting resolution	203.2x97.8	203.2x195.6	203.2x391	406.4x391	–
	Internet-FAX					
	Transmitting resolution	200x100	200x200	200x400	400x400	600x600
	Scanner mode					
	Selection mode	Standard	Fine	Super fine	Ultra fine	–
	Input resolution: OC	600x391.2	600x391.2	600x391.2	600x600	–
	Input resolution: DSPF	600x300	600x300	600x300	600x300	–
	Transmitting resolution	200x200	300x300	400x400	600x600	–
Reading level						
	256 tones					
Exposure lamp						
	Electrodeless xenon lamp					
Output level						
	Binary					

(3) Document Glass

Reading area	297 x 431.8 (mm) 11.7" x 17"	
Original alignment	Left edge / Rear corner alignment	
Original size detection	Provided (Standard size only)	
Sizes to be detected	Automatic (one detection unit to be used with software modification by destination)	
	Inch-1	11" x 17", 8.5" x 14", 8.5" x 11", 8.5" x 11"R, 5.5" x 8.5"
	Inch-2	11" x 17", 8.5" x 13", 8.5" x 11", 8.5" x 11"R, 5.5" x 8.5"
	AB-1	A3, B4, A4, A4R, B5, B5R, A5
	AB-2	A3, A4, A4R, A5, B5, B5R, 216 x 330 mm
	AB-3	8K, A4, A4R, A5, B4, 16K, 16KR

OR guide display	Rear left side (Print display)	Original reference position "⇒"
	Left side OR guide (Print display)	(From the Interior side) 5-1/2, A5R, B5R, A4R/A5, 8.5", B4R/B5, 11", A3R/A4
	Interior side OR guide (Print display)	(From the left side) 5-1/2, A5, B5, A4/A5R, 8-1/2, B5R, 11", A4R, 13", 14", B4R, A3R, 17"
	Interior side OR guide	Book marks are at A4 and 8-1/2 positions.
	The position available to attach the staple position guide label when the optional finisher (desktop console type) is equipped.	

(4) DSPF/SPF

Type	DSPF	One-scan-dual-side scanning method DSPF with OC integrated
Scan speed	Standard mode	45 opm
	High quality mode	22.5 opm
Original alignment	Center alignment	
Original size	A3, B4, A4, A4R, B5, B5R, A5, A5R 11"x17", 8.5"x14", 8.5"x13", 8.5"x11", 8.5"x11"R, 5.5"x8.5", 5.5"x8.5"R, 8K, 16K, 16KR (Long size original up to 800mm in FAX, e-mail and iFAX mode)	
Original paper weight	50~128g/m², 15~34lbs	
Original stack capacity	Max. 50 sheets (Max. 30 sheets for A3, B4,11" x 17",8.5" x 14") (Max. 15 sheets for A3, B4, 11" x 17", 8.5" x 14" over 105g/m²) or, Total thickness less than Max. 6.5mm (at 50 to 80g/m², 15 to 21lbs) Max. 5.0mm (at 80 to 128g/m², 21 to 34lbs)	
Not transportable original type	Transparency film, secondary original paper, tracing paper, carbon paper, thermal paper, original with crumple/crimp/rip, original with attachment/clipping, original with many punch holes (with 2 or 3 holes acceptable), original preprinted with ink-ribbon, Documents with considerable curl.	
Original size detection	Provided	
Sizes to be detected	Automatic (one detection unit to be used with software modification by destination)	
	Inch-1	11" x 17", 8.5" x 14", 8.5" x 11", 8.5" x 11"R, 5.5" x 8.5", A4, A3
	Inch-2	11" x 17", 8.5" x 13", 8.5" x 11", 8.5" x 11"R, 5.5" x 8.5", A4, A3
	AB-1	A3, B4, A4, A4R, B5, B5R, A5, A3, 8.5" x 11", 11" x 17" 216 x 330 mm
	AB-2	A3, B4, A4, A4R, B5, B5R, A5, 8.5" x 11", 11" x 17", 216 x 330 mm
	AB-3	8K, A4, A4R, B4, 16K, 16KR, 8.5" x 11", 216 x 330 mm

Original tray guide display	Center of the tray (inscribed symbol)	Original reference position "←" Original face-down placement indication "⎙"
	Original Guide (inscribed symbol)	(From Center) B5R, A4R/A5, 8.5", B4R/B5, 11", A3R/A4
	The position available to attach the staple position guide label when the optional finisher (desktop console type) is equipped.	

(5) Power Source

Supplied from the main unit

(6) Dimensions

External dimensions (WxDxH)	32.4" x 23.9" x 7.48" (824 x 606 x 190 mm)
Occupied space dimensions (WxD)	37.2" x 24.4" (945 x 619 mm) (When the tray is extended)
Weight	DSPF: Approx. 46.3 lbs (21.0 kg)

(7) Display device at scanner part

Type	Dot map LCD, touch panel
Display dot number	640 x 240 dots (dot pitch 0.24x0.24 mm)
LCD operating dimension	153.5 x 57.5 mm
LCD back-light	Fluorescent tube method
LCD brightness adjustment	Provided

(8) Key

Mode selection area	Job status key Document filing key (* online display LED/data in-memory display LED) Image send key (busy display LED/data in-memory display LED) Copy mode key User definition key
Basic input area	Start key CA key 10-key Clear key ∗ key #/P key

* For printer

(9) Touch sense method

Resistive film method

(10) Used character in the LCD

Dot	8 x 16 , 16 x 16 dots
Bold display	O

4. Rack for Scanner

(1) Dimensions

Strength	60 kg
Weight	Approx. 16.3 (7.4 kg)

[4] CONSUMABLE PARTS

1. Supply system table

A. European Subsidiary/East Europe/Russia/Australia/New Zealand

No.	Item	Content		Life	Model name	Remarks
1	Toner Cartridge (Black)	Toner CA with IC Chip (Toner; Net Weight 750g)	x 10	350K (35K x 10)	AR-455LT	*Life: A4 size at Area Coverage 6%
2	Developer (Black)	Developer (Developer; Net Weight 500g)	x 10	1,000K (100K x 10)	AR-455LD	
3	Drum	Drum	x 1	200K	AR-455DM	

B. Taiwan (Aurora)

No.	Item	Content		Life	Model name	Remarks
1	Toner Cartridge (Black)	Toner CA with IC Chip (Toner; Net Weight 750g)	x 10	350k (35k x 10)	AR-455ET	*Life : A4 size at Area Coverage 6%
2	Developer (Black)	Developer (Developer; Net Weight 500g)	x 10	1,000k (100K x 10)	AR-455LD	
3	Drum	Drum	x 1	200k	AR-455DM	

C. Asia

No.	Item	Content		Life	Model name	Remarks
1	Toner Cartridge (Black)	Toner CA with IC Chip (Toner; Net Weight 750g)	x 10	350K (35K x 10)	AR-455CT	*Life: A4 size at Area Coverage 6%
2	Developer (Black)	Developer (Developer; Net Weight 500g)	x 10	1,000K (100K x 10)	AR-455CD	
3	Drum	Drum	x 1	200K	AR-455DR	

D. Middle East/Africa/Israel/Philippines

No.	Item	Content		Life	Model name	Remarks
1	Toner Cartridge (Black)	Toner CA with IC Chip (Toner; Net Weight 750g)	x 10	350K (35K x 10)	AR-455ET	*Life : A4 size at Area Coverage 6%
2	Developer (Black)	Developer (Developer; Net Weight 500g)	x 10	1,000k (100K x 10)	AR-455CD	
3	Drum	Drum	x 1	200k	AR-455DR	

E. Hong Kong

No.	Item	Content		Life	Model name	Remarks
1	Toner Cartridge (Black)	Toner CA with IC Chip (Toner; Net Weight 750g)	x 10	350K (35K x 10)	AR-455CT-C	*Life : A4 size at Area Coverage 6%
2	Developer (Black)	Developer (Developer; Net Weight 500g)	x 10	1,000K (100K x 10)	AR-455CD-C	
3	Drum	Drum	x 1	200k	AR-455DR-C	

F. China

No.	Item	Content		Life	Model name	Remarks
1	Toner Cartridge (Black)	Toner CA with IC Chip (Toner; Net Weight 750g)	x 1	35k	AR-456ST-C	*Life : A4 size at Area Coverage 6%
2	Developer (Black)	Developer (Developer; Net Weight 500g)	x 1	100k	AR-455SD-C	
3	Drum	Drum	x 1	200k	AR-455DR-C	

2. Maintenance parts list

A. Europe/Australia/New Zealand/Taiwan

No.	Item	Content		Life	Model name	Remarks
1	200K PM kit	Cleaner blade	x 1	200K	AR-451KA	*1: Screen grid, charging plate, MC cleaner unit are included.
		Drum separation pawl	x 4			
		MC unit *1	x 1			
		Toner receiving seal	x 1			
		Side malt F	x 1			
		Side malt R	x 1			
		Transfer roller	x 1			
		Discharger plate	x 1			
		Paper dust removing unit	x 1			
		DV blade	x 1			
		DV side seal F	x 1			
		DV side seal R	x 1			
		Upper heat roller	x 1			
		Fusing separation pawl (Upper)	x 4			
		Lower heat roller	x 1			
		Fusing separation pawl (Lower)	x 2			
		Cleaning roller	x 1			
		Bearing	x 2			
2	Staple cartridge	Staple cartridge	x 3	3000 times x 3	AR-SC1	Cartridge for AR-FN4 Common with cartridge for AR-FN6
3	Staple cartridge	Staple cartridge	x 3	5000 times x 3	AR-SC2	Common with cartridge for AR-FN7

Note: The other maintenance parts which are not listed above are registered as service parts.

B. Agency/Asia/Middle East/Africa/Latin America

No.	Item	Content		Life	Model name	Remarks
1	200K PM kit	Cleaner blade	x 1	200K	AR-451KA	*1: Screen grid, charging plate, MC cleaner unit are included.
		Drum separation pawl	x 4			
		MC unit *1	x 1			
		Toner receiving seal	x 1			
		Side malt F	x 1			
		Side malt R	x 1			
		Transfer roller	x 1			
		Discharger plate	x 1			
		Paper dust removing unit	x 1			
		DV blade	x 1			
		DV side seal F	x 1			
		DV side seal R	x 1			
		Upper heat roller	x 1			
		Fusing separation pawl (Upper)	x 4			
		Lower heat roller	x 1			
		Fusing separation pawl (Lower)	x 2			
		Cleaning roller	x 1			
		Bearing	x 2			
2	Staple cartridge	Staple cartridge	x 3	3000 times x 3	AR-SC1	Cartridge for AR-FN4 Common with cartridge for AR-FN6
3	Staple cartridge	Staple cartridge	x 3	5000 times x 3	AR-SC2	Common with cartridge for AR-FN7

Note: The other maintenance parts which are not listed above are registered as service parts.

C. Hong Kong

No.	Item	Content		Life	Model name	Remarks
1	200K PM kit	Cleaner blade	x 1	200K	AR-451KA	*1: Screen grid, charging plate, MC cleaner unit are included.
		Drum separation pawl	x 4			
		MC unit *1	x 1			
		Toner receiving seal	x 1			
		Side malt F	x 1			
		Side malt R	x 1			
		Transfer roller	x 1			
		Discharger plate	x 1			
		Paper dust removing unit	x 1			
		DV blade	x 1			
		DV side seal F	x 1			
		DV side seal R	x 1			
		Upper heat roller	x 1			
		Fusing separation pawl (Upper)	x 4			
		Lower heat roller	x 1			
		Fusing separation pawl (Lower)	x 2			
		Cleaning roller	x 1			
		Bearing	x 2			
2	Staple cartridge	Staple cartridge	x 3	3000 times x 3	AR-SC1	Cartridge for AR-FN4 Common with cartridge for AR-FN6
3	Staple cartridge	Staple cartridge	x 3	5000 times x 3	AR-SC2	Common with cartridge for AR-FN7

Note: The other maintenance parts which are not listed above are registered as service parts.

D. China

No.	Item	Content		Life	Model name	Remarks
1	200K PM kit	Cleaner blade	x 1	200K	AR-451KA	*1: Screen grid, charging plate, MC cleaner unit are included.
		Drum separation pawl	x 4			
		MC unit *1	x 1			
		Toner receiving seal	x 1			
		Side malt F	x 1			
		Side malt R	x 1			
		Transfer roller	x 1			
		Discharger plate	x 1			
		Paper dust removing unit	x 1			
		DV blade	x 1			
		DV side seal F	x 1			
		DV side seal R	x 1			
		Upper heat roller	x 1			
		Fusing separation pawl (Upper)	x 4			
		Lower heat roller	x 1			
		Fusing separation pawl (Lower)	x 2			
		Cleaning roller	x 1			
		Bearing	x 2			
2	Staple cartridge	Staple cartridge	x 3	3000 times x 3	AR-SC1	Cartridge for AR-FN4 Common with cartridge for AR-FN6
3	Staple cartridge	Staple cartridge	x 3	5000 times x 3	AR-SC2	Common with cartridge for AR-FN7

Note: The other maintenance parts which are not listed above are registered as service parts.

2. Production number identification

A. Drum cartridge

The lot number, printed on the front side flange, is composed of 10 digits, each digit showing the following content:

1	2	3	4	5	6	7	8	9	10

1 Number
For this model, this digit is 2.
2 Alphabet
Indicates the model conformity code. T for this model.
3 Number
Indicates the end digit of the production year.
4 Number or X, Y, Z
Indicates the production month.
X stands for October, Y November, and Z December.
5/6 Number
Indicates the production day on the month.
7 Number or X, Y, Z
Indicates the month of packing.
X stands for October, Y November, and Z December.
8/9 Number
Indicates the day of the month of packing.
10 Alphabet
Indicates the production factory. "A" for Nara Plant.

B. Toner cartridge

The lot number is of 7 digits, and each digit indicates as follows.
The lot number shall be printed in the position shown in the figure.

1	2	3	4	5	6	7

1 Version number (A - sequentially revised)
2 Numeral figure
Indicates the end digit of the production year.
3 Alphabet
Indicates the production factory. (B for SOCC)
4 Destination code
5/6 Numeral figures
Indicates the production day.
7 Numeral figure or X, Y, Z
Indicates the production month.
X stands for October, Y November, and Z December.

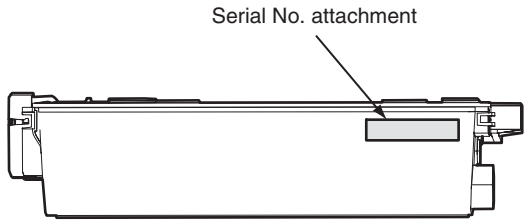

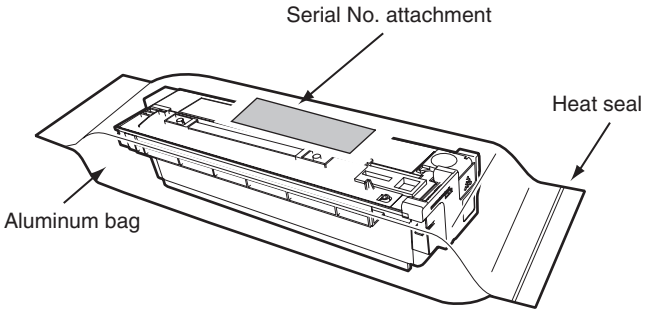

C. Developer cartridge

The lot number is of 8 digit, and each digit indicates as follows.
The lot number shall be printed on the bag.

1	2	3	4	5	6	7	8

1 Alphabet
Indicates the production factory.
2 Number
Indicates the production year.
3/4 Number
Indicates the production month.
5/6 Number
Indicates the production day.
7 Hyphen
8 Number
Indicates the production lot.

3. Environmental conditions

A. Operating conditions

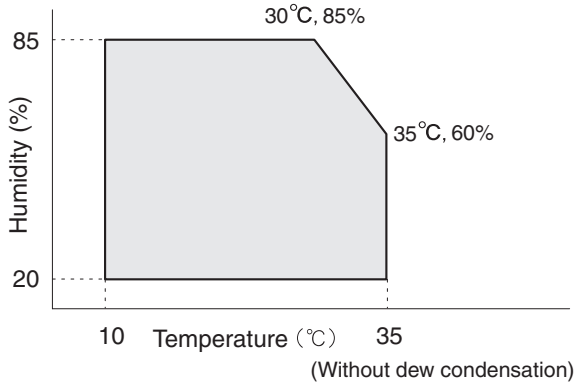

B. Storage conditions

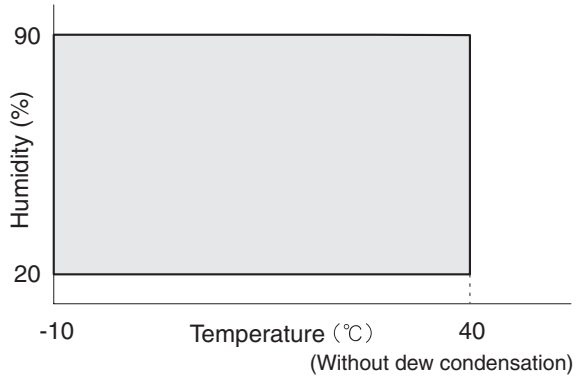

[5] EXTERNAL VIEWS AND INTERNAL STRUCTURES

1. Exterior

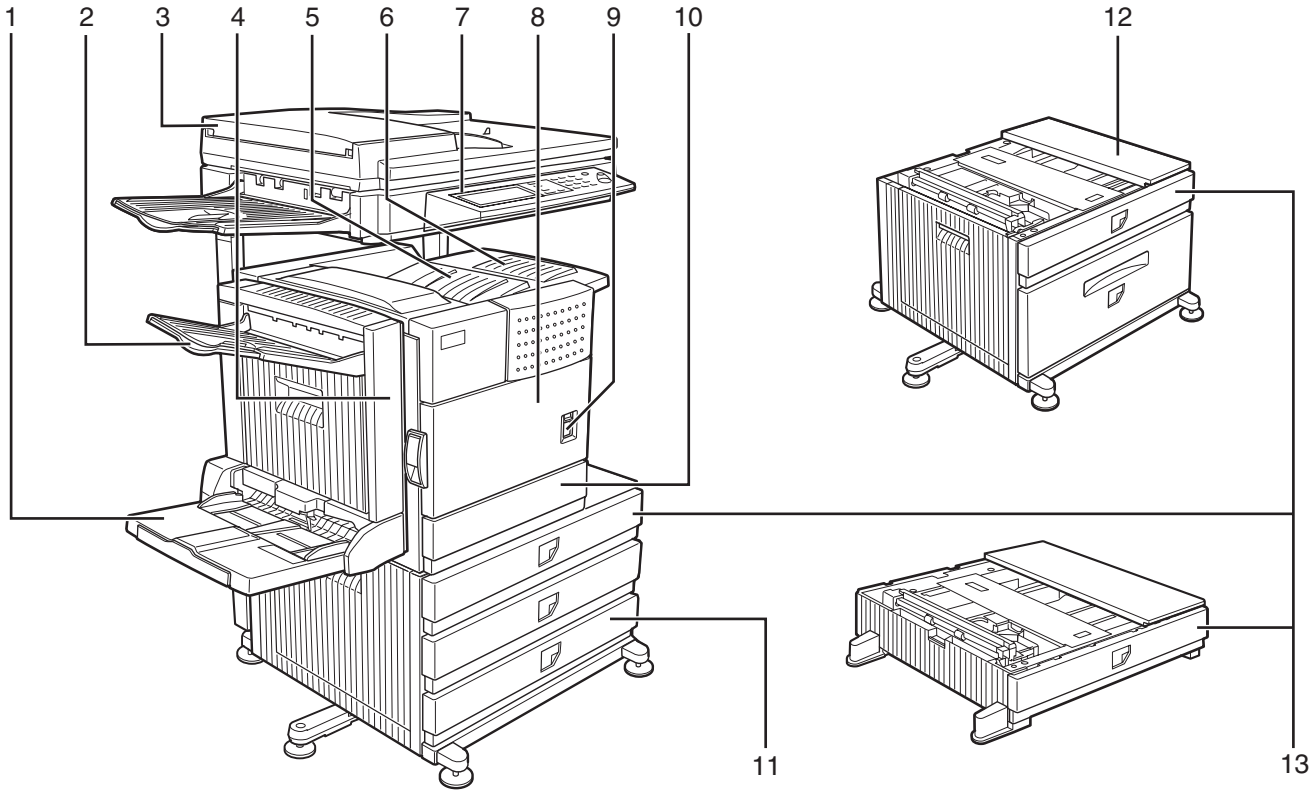

No.	Name	Function	Note
1	Bypass tray	This tray can also be used for special papers including transparency film.	Option (AR-DU4)
2	Exit tray	The tray is extendable to support large size paper. Extend the tray when 11" x 17", 8-1/2" x 14", 8-1/2" x 13", A3 or B4 paper is being used.	Option (AR-DU4/AR-TE3)
3	Automatic document feeder	This automatically feeds and scans multiple sheet originals. Both sides of two-sided originals can be scanned at once.	–
4	Duplex module	Module for two-sided printing	Option (AR-DU3/DU4)
5	Upper paper output area	Finished sheets are deposited here.	–
6	Upper exit tray extension	Provides support for large size paper.	Option (AR-AR-TE4)
7	Operation panel	–	–
8	Front cover	Open to add toner.	–
9	Power switch	Press to turn power on and off.	–
10	Paper tray 1	–	–
11	Stand/3 x 500 sheet paper drawer	This paper feed unit contains an upper multi-purpose drawer and two lower drawers each of which can hold a maximum of 500 sheets of 20 lbs. (80 g/m^2) paper.	Option (AR-D27)
12	Stand/MPD & 2000 sheet paper drawer	This paper feed unit contains an upper multi-purpose drawer and a lower drawer which can hold a maximum of 2000 sheets of 20 lbs. (80 g/m^2) paper.	Option (AR-D28)
13	Multi purpose drawer	Up to 500 sheets of 20 lbs. (80 g/m^2) paper can be loaded. Also special papers such as envelopes (standard sizes only) and postcards can be set.	Option (AR-MU2)

2. Interior

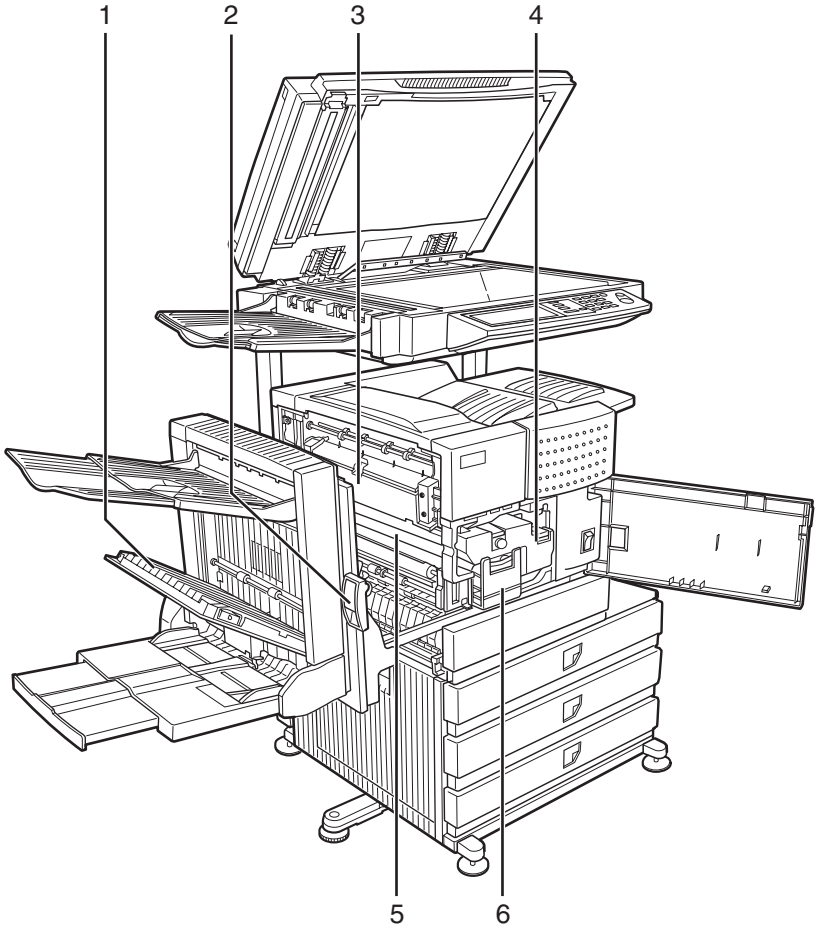

No.	Name	Function
1	Duplex module side cover	Open when a misfeed has occurred in the duplex module.
2	Side cover latch	Push up to open the side cover when a misfeed has occurred in the main unit.
3	Fusing unit	Lift up to open the side cover when a misfeed has occurred in the main unit. CAUTION: The fusing unit is hot. Take care in removing misfed paper.
4	Toner cartridge (drum/toner cartridge)	The toner cartridge must be replaced when indicated on the operation panel.
5	Photoconductive drum	Images are formed on the photoconductive drum. NOTE: Do not touch or damage the photoconductive drum.
6	Cartridge lock lever	When replacing the drum, toner or developer cartridge, turn down this lever and pull it out.

3. Operation panel

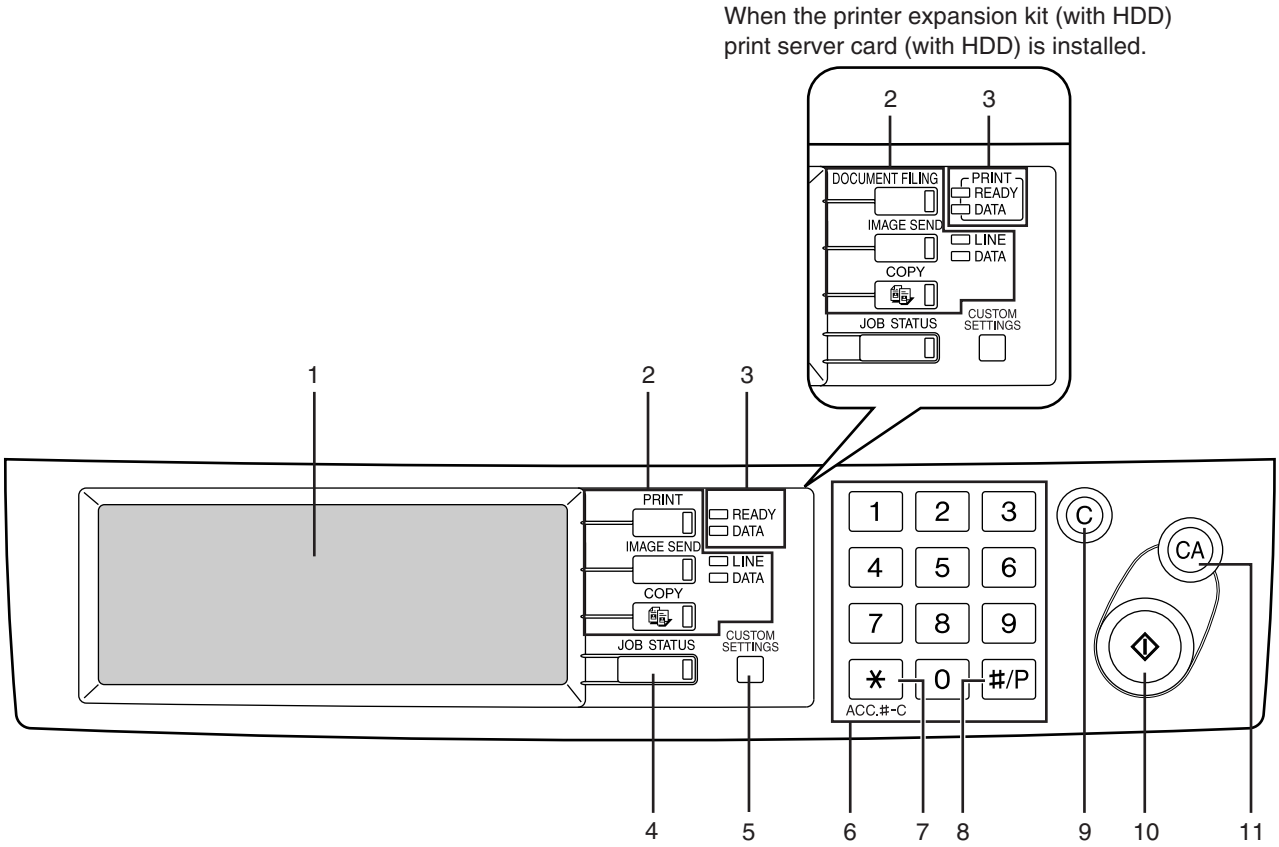

No.	Name	Function
1	Touch panel	The machine status, messages and touch keys are displayed on the panel. The document filing, copy, network scanner*2, and fax*3 functions are used by switching to the screen for the desired function.
2	Mode select keys and indicators	Use to change modes and the corresponding display on the touch panel. [PRINT] key/[DOCUMENT FILING] key*1 Press to select the print/document filing*1 mode. [IMAGE SEND] key/LINE indicator/DATA indicator Press to change the display to network scanner mode*2 or fax mode*3. [COPY] key Press to select the copy mode.
3	PRINT mode indicators	READY indicator Print data can be received when this indicator is lit. DATA indicator Lights up or blinks when print data is being received. Also lights up or blinks when printing is being performed.
4	[JOB STATUS] key	Press to display the current job status.
5	[CUSTOM SETTINGS] key	This is used to store, edit, and delete user names and folder names for the document filing function*1, and to configure the key operator programs and printer configuration settings.
6	Numeric keys	Use to enter numeric values for various settings.
7	[✱] key ([ACC.#-C] key)	This key is used in copy mode, document filing mode*1, network scanner mode*2, and fax mode*3.
8	[#/P] key	This is used as a program key when using the copy function, and to dial when using the fax function*3.
9	[C] key (Clear key)	This key is used in copy mode, document filing mode*1, network scanner mode*2, and fax mode*3.
10	[START] key	Use this key to start copying in copy mode, scan a document in network scanner mode*2, or scan a document for transmission in fax mode*3.
11	[CA] key (Clear all key)	This key is used in copy mode, document filing mode*1, network scanner mode*2, and fax mode*3. Use the key to cancel settings and perform an operation from the initial machine state.

*1: When the printer expansion kit (with HDD)/print server card (with HDD) is installed.

*2: When the network scanner option is installed.

*3: When the fax option is installed.

4. Job status screen (common to print, copy, fax, network scan and Internet fax)

This screen is displayed when the [JOB STATUS] key on the operation panel is pressed.

This screen can be used to display the "JOB QUEUE" (showing stored jobs and the current job) or the "COMPLETE" job list (showing finished jobs). This screen can be used to check jobs, interrupt a job in progress to perform another job, and cancel a job.

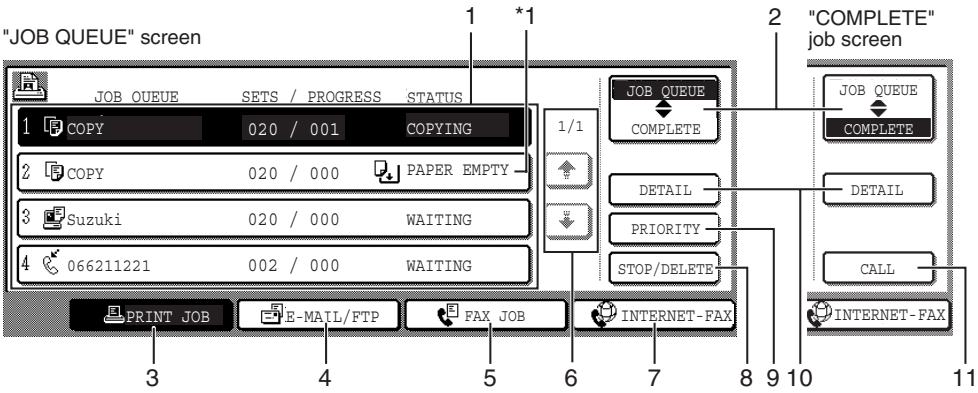

No.	Name	Function
1	Job list	The displayed jobs in the job list are themselves operation keys. To cancel printing or to give a job the highest print priority, touch the relevant job key to select the job and execute the desired operation using the keys described in 8 and 9. This shows the current job and the jobs waiting to be run. The icons to the left of the jobs in the queue show the job mode. The document filing reprint job icon is highlighted. Note that the icon does not become highlighted during retransmission of a fax/image transmission job. Print mode Copy mode E-MAIL/FTP mode Scan to e-mail job Scan to FTP job Scan to Sharpdesk job Fax mode Fax send job Fax reception job PC-Fax send job Internet Fax mode i-Fax send job i-Fax reception job PC-Internet Fax send job *1: "PAPER EMPTY" in the job status display When a job status display indicates "PAPER EMPTY", the specified paper size for the job is not loaded in any of the trays. In this case, the job will be suspended until the required paper is loaded. Other stored jobs will be printed (if possible) until the required paper is loaded. (Other jobs will not be printed if the paper runs out during printing.) If you need to change the paper size because the specified paper size is not available, touch the current job key to select it and then touch the [DETAIL] key described in 10.
2	Mode select key	This switches the job list display between "JOB QUEUE" and "COMPLETE". "JOB QUEUE": Shows stored jobs and the job in progress. "COMPLETE": Shows finished jobs. Files saved using the "FILE" and "QUICK FILE" functions and finished broadcast transmission jobs appear as keys in the finished job screen. The "FILE" or "QUICK FILE" job keys in the finished job screen can be touched, followed by the [CALL] key, to call up a finished job and print or transmit it. A finished broadcast transmission job key can be touched followed by the [DETAIL] key to check the result of the transmission.
3	[PRINT JOB] key	This displays the print job list of print mode (copying, printing, fax reception, Internet fax reception, and self printing).
4	[E-MAIL/FTP] key	This displays the transmission status and finished jobs of scan mode (Scan to e-mail, Scan to FTP, and Scan to SharpDesk) when the network scanner option is installed.
5	[FAX JOB] key	This displays the transmission/reception status and finished jobs of fax mode (fax and PC-Fax) when the fax option is installed.
6	Display switching keys	Use to switch the page of the displayed job list.
7	[INTERNET-FAX] key	This displays the transmission/reception status and finished jobs of Internet fax mode and PC Internet fax mode when the network scanner option is installed.
8	[STOP/DELETE] key	Use to cancel or delete the current job or delete the stored job. Note that printing of received faxes and received Internet faxes cannot be canceled or deleted.
9	[PRIORITY] key	Touch this key after selecting a stored job in this [JOB QUEUE] list to print the job ahead of the other jobs. Note that a job in progress cannot be interrupted if it is an interrupt copy job or if it is a list print job.
10	[DETAIL] key	This shows detailed information on the selected job. Files saved using the "FILE" and "QUICK FILE" functions and finished broadcast transmission jobs appear as keys in the finished job screen. A Quick File in the finished job screen or the [Filing] key can be touched, followed by the [CALL] key, to call up a finished job and print or transmit it. A finished broadcast transmission job key can be touched followed by the [DETAIL] key to check the result of the transmission.
11	[CALL] key	When this key is touched after selecting a job in the COMPLETE job status screen (a job stored using the FILE or QUICK FILE keys of the document filing function), the "JOB SETTINGS" menu screen appears to let you resend or reprint the finished job.

5. Cross sectional view

A. Scanner unit

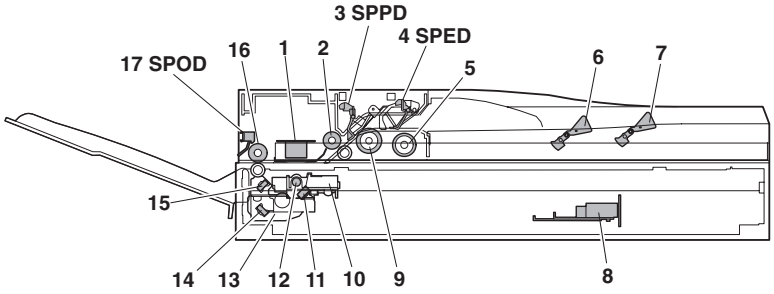

No.	Name	No.	Name
1	CIS unit	10	Copy lamp base unit
2	Original resist roller	11	No. 1 mirror
3	Original resist front sensor (SPPD)	12	Copy lamp (Xenon)
4	Original set sensor (SPED)	13	Mirror base unit
5	Original take-up sensor	14	No. 3 mirror
6	Original length sensor 1 (SPLS1)	15	No. 2 mirror
7	Original length sensor 2 (SPLS2)	16	Original exit roller
8	CCD/lens unit	17	Original exit sensor
9	Original feed roller		

B. Engine

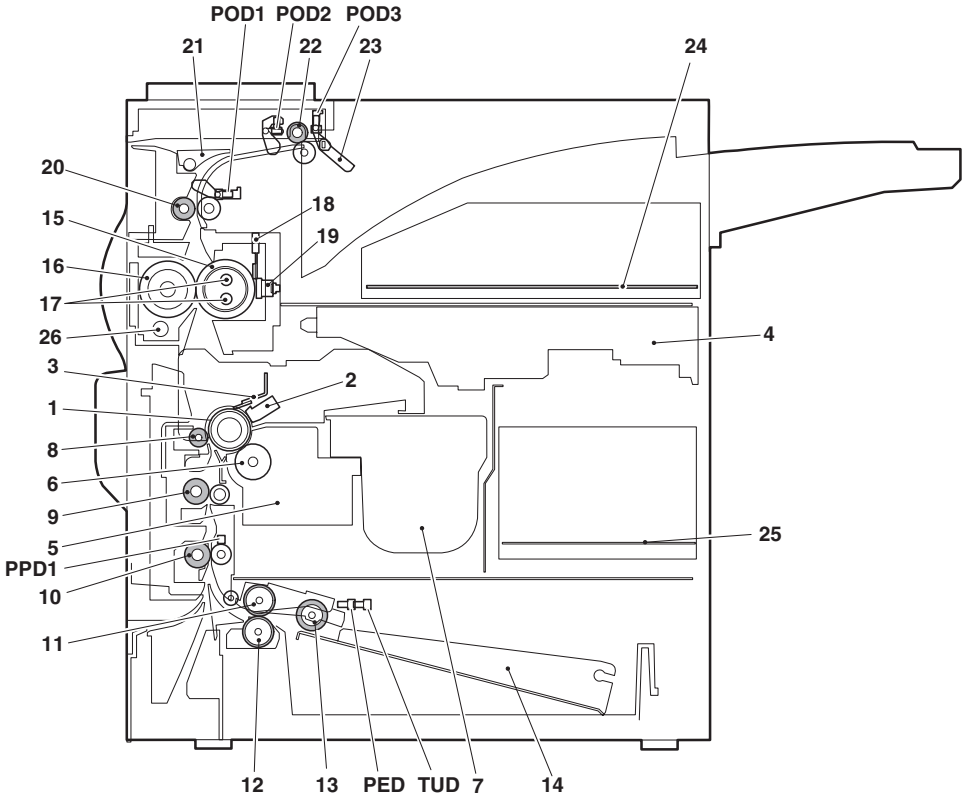

No.	Name	No.	Name
1	OPC drum	14	Machine tray (Paper tray1) rotating plate
2	Main charger	15	Upper heat roller
3	Cleaning blade	16	Pressure roller
4	LSU	17	Heater lamp
5	Developing unit	18	Thermistor (RTH1 / RTH2)
6	Magnet roller	19	Thermostat
7	Toner hopper	20	Fusing back roller
8	Transfer roller	21	Reverse gate
9	Resist roller	22	Paper exit roller
10	Paper transport roller	23	Full detection lever
11	Machine tray (Paper tray1) paper feed roller	24	Printer control PWB
12	Machine tray (Paper tray1) separation roller	25	Power supply unit
13	Machine tray (Paper tray1) take-up roller	26	Cleaning roller

6. Switch, Sensor

A. Scanner unit

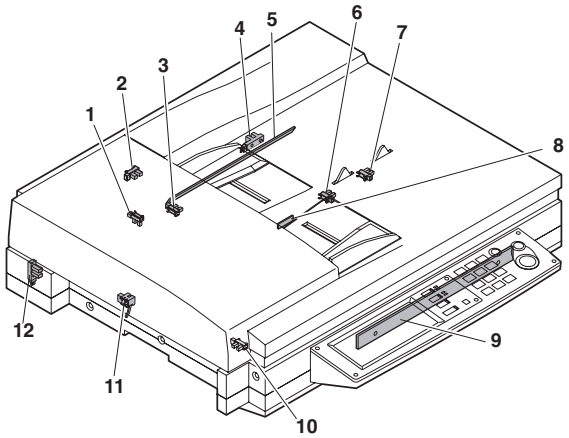

	Code	Name	Active condition
1	SPPD	SPF original resist front sensor	
2	SCOV	SPF paper feed cover sensor	
3	SPED	SPF original set sensor	
4	OCSW	OC open/close sensor	
5	ORS-LED	Original size sensor PWB (Light emitting side)	
6	SPLS1	SPF original length sensor 1	
7	SPLS2	SPF original length sensor	
8	SPFVR	SPF original width detection volume PWB	
9	ORS-PD	Original size sensor PWB (Light receiving side)	
10	SOCD	SPF open/close sensor	
11	SPOD	SPF original exit sensor	
12	MHPS	Mirror home position sensor	

B. Engine

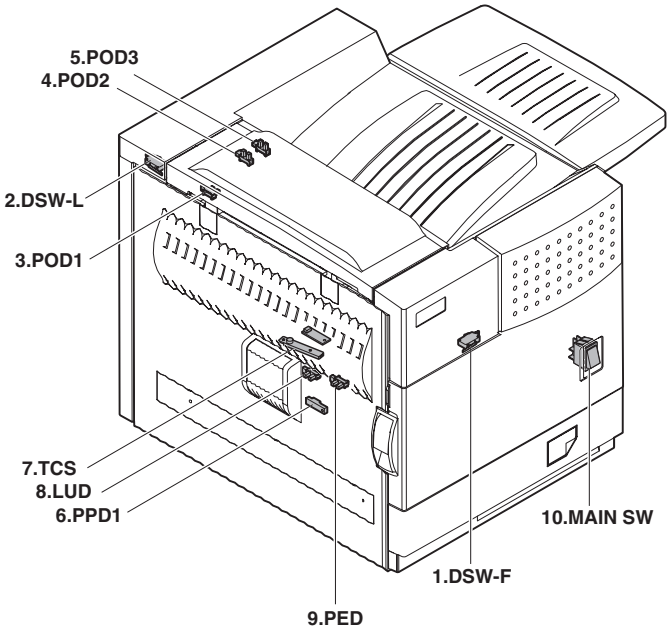

	Code	Function/Operation	Active condition
1	DSW-F	Front door open/close detection	H= Door open
2	DSW-L	Left door open/close detection	H=Door open
3	POD1	Paper exit detection	L= Paper detection
4	POD2	Paper exit detection	L= Paper detection
5	POD3	Paper exit detection Full	L= Paper detection
6	PPD1	Paper transport detection	L= Paper detection
7	TCS	Toner concentration sensor	
8	LUD	Paper feed cassette upper limit detection	H= Upper limit detection
9	PED	Paper feed cassette paper empty detection	L= Paper empty detection
10	MAIN SW	Power switch	

7. PWB

A. Scanner unit

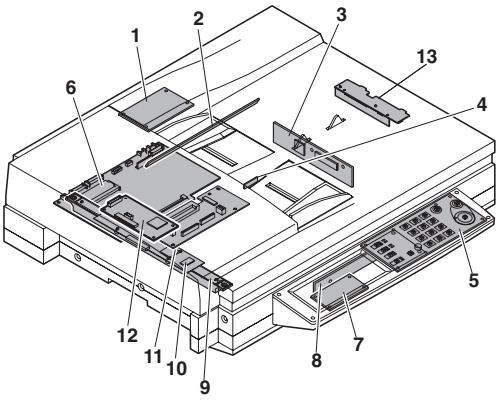

No.	Name	Function/Operation
1	SPF control PWB	SPF control
2	Original size detection PWB (Light emitting side)	Original size detection when using the table glass
3	CCD PWB (in lens unit) (The lens unit cannot be disassembled.)	Image scan (Table glass/SPF surface)
4	SPF original width detection volume PWB	SPF original width detection
5	MFP operation PWB	Panel operation control
6	Scanner control PWB	Scanner unit control
7	LVDS PWB	LCD signal relay
8	Original size sensor (Light receiving side)	Original size detection when using the table glass
9	CIS unit (in CIS unit) (The CIS unit cannot be disassembled.)	Image scan (SPF back surface)
10	CIS interface PWB (in CIS unit) (The CIS unit cannot be disassembled.)	CIS signal AD conversion process
11	Scanner interface PWB	Scanner unit and connection of scanner control PWB
12	CIS control PWB	CIS unit control and image process
13	CL inverter PWB	Inverter for copy lamp

B. Engine

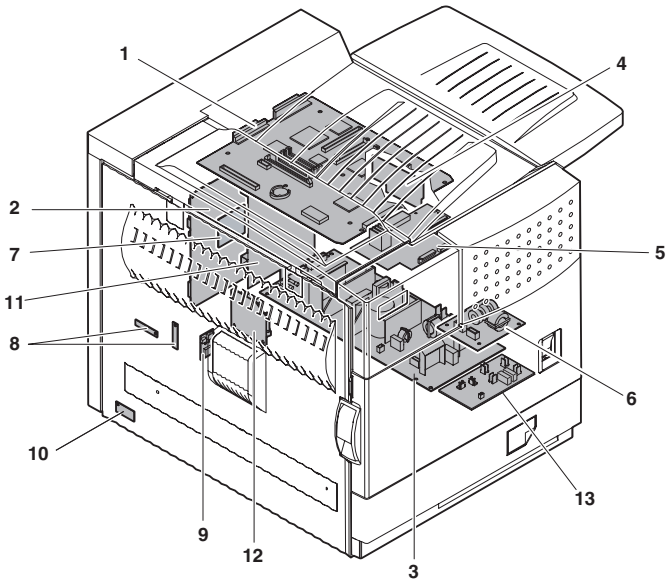

No.	Name	Function/Operation
1	PRT controller	Image process, image data communication control
2	PCU PWB	Overall control of the machine and options
3	Power supply unit	DC power supply
4	LD PWB (Inside LSU)	Laser ON control (Inside LSU: LSU cannot be disassembled.)
5	Mother PWB	Signal interface between PCU and the controller
6	Reactor PWB (200V only) / Filter PWB (Taiwan only)	Noise filter
7	BD PWB	Laser control (Inside LSU: LSU cannot be disassembled.)
8	High voltage resistor PWB	High voltage load adjustment
9	Cassette detection PWB	Paper cassette control
10	Drawer PWB	Fan control
11	High voltage PWB	High voltage power supply
12	Fuse PWB	Protection of the machine when an abnormal power is supplied.
13	Relay PWB	HDD back up

8. Motor, Clutch, Solenoid

A. Scanner unit

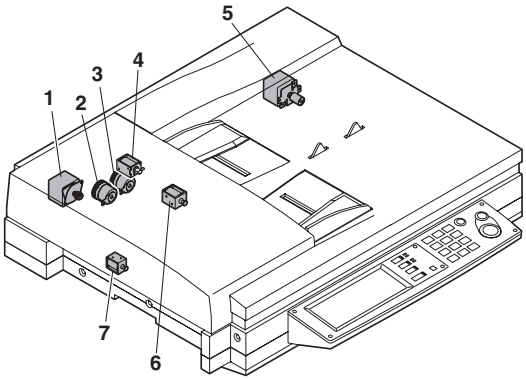

No.	Name		Function/Operation
1	SPFM	SPF motor	Original transport in SPF scan
2	SRRC	SPF original resist clutch	SPF original scan timing adjustment
3	SPFC	SPF original feed clutch	SPF original feed roller drive
4	SDSS	SPF original stopper solenoid	SPF original stopper gate drive
5	MIRM	Mirror motor	Mirror base copy lamp base drive
6	SPFS	SPF original feed solenoid	SPF original feed unit drive
7	STMPS	Stamp solenoid	Finish stamp drive (Option AR-SU1 required)

B. Engine

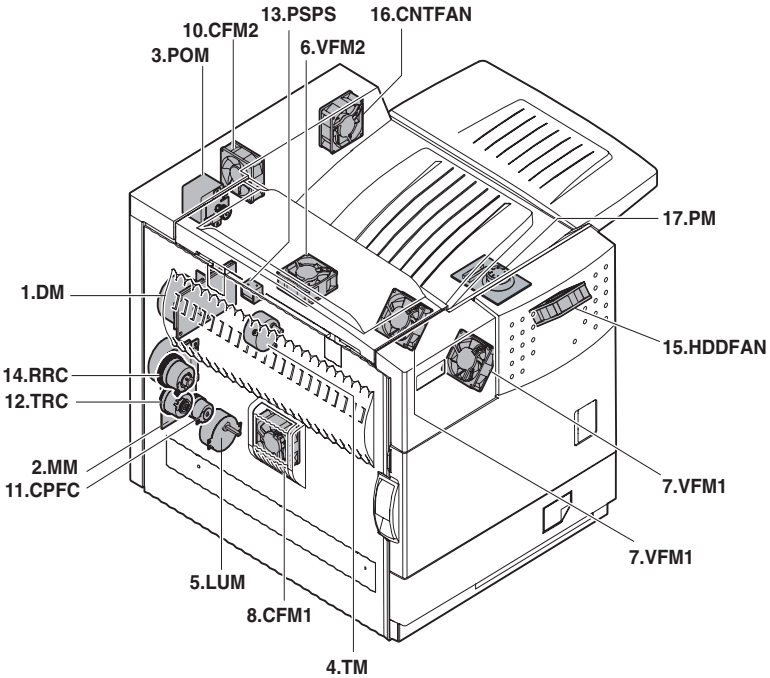

	Code	Function/Operation	Type
1	DM	Drum motor	Brushless motor
2	MM	Main motor	Brushless motor
3	POM	Paper exit motor	Stepping motor
4	TM	Toner motor	Synchronous motor
5	LUM	Lift-up motor	Synchronous motor
6	VFM2	Heat exhaust fan motor	Fan motor
7	VFM1	Cooling fan motor	Fan motor
8	CFM1	Suction fan motor	Fan motor
10	CFM2	Ozone exhaust fan motor	Fan motor
11	CPFC	Paper cassette paper feed clutch	
12	TRC	Paper transport clutch	
13	PSPS	Separation solenoid	
14	RRC	Resist roller clutch	
15	HDDFAN	Cooling fan motor (for HDD)	Fan motor
16	CNTFAN	Cooling fan motor (for controller)	Fan motor
17	PM	Polygon motor	Polygon motor

[6] UNPACKING AND INSTALLATION

1. Installing procedure flowchart

There are many combinations between this machine and option units. For installing option units, observe the following procedures for efficiency.

To install the devices effciently, follow the procedure below.

Some peripheral devices may have been installed as standard devices depending on the main unit model.

Part of descriptions and illustrations may be different.

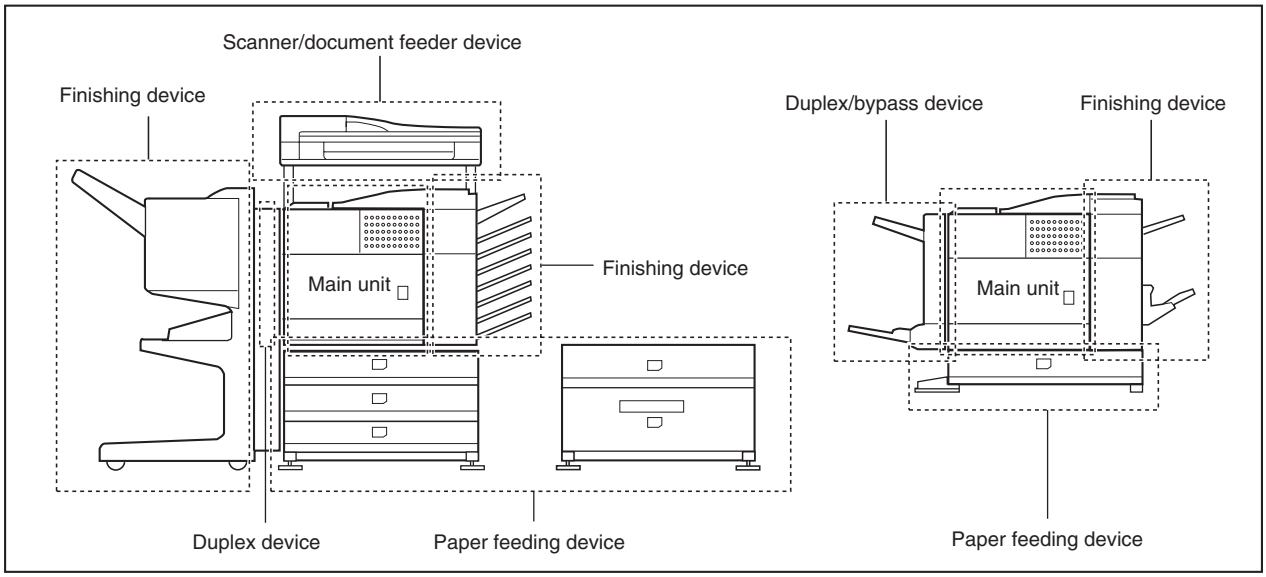

* To install the AR-MU2, the optional exclusive-use desk is required.

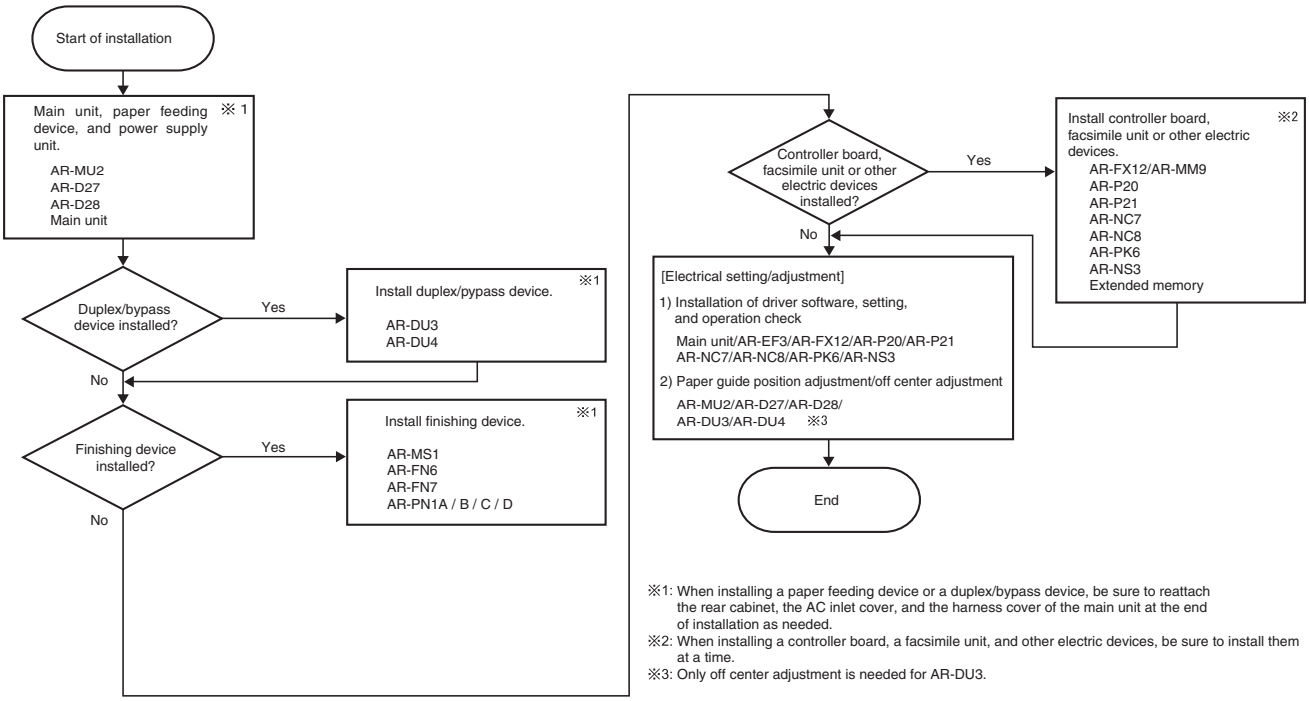

* For installation of an option unit, refer to the Service Manual of the option unit.

2. Note for installation place

Improper installation may damage this product. Please note the following during initial installation and whenever the machine is moved.

1) The machine should be installed near an accessible power outlet for easy connection.
2) Be sure to connect the power cord only to a power outlet that meets the specified voltage and current requirements. Also make certain the outlet is properly grounded.
   - For the power supply requirements, see the name plate of the main unit.
3) Do not install your machine in areas that are:
   - damp, humid, or very dusty
   - exposed to direct sunlight
   - poorly ventilated
   - subject to extreme temperature or humidity

   changes, e.g., near an air conditioner or heater.
4) Be sure to allow the required space around the machine for servicing and proper ventilation.

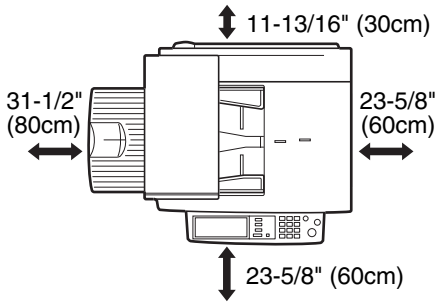

3. Unpacking procedure

A. AR-M355U/M455U (North America), AR-M351U/M451U (Europe)

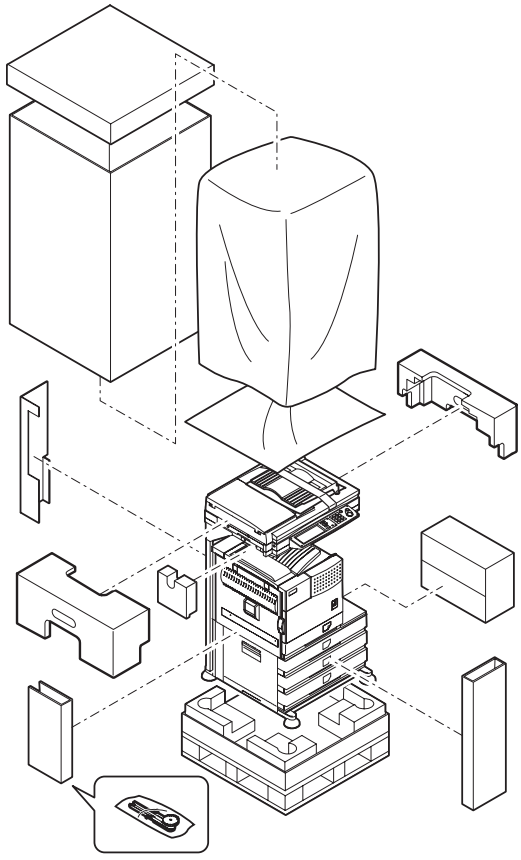

Check the following items are included in the package.

(North America)

AR-M355U/M455U	AR-M355U/M455U + AR-P20	AR-M355U/M455U + AR-P21
Operating Manual (Copier/Key Operation)		
–	Install Guide (PCL, PC)	
–	CD-ROM (Printer)	
–	CD-ROM (NIC)	
Maintenance card/Maintenance case		
Key Sheet (PRINT display)		

(Europe)

AR-M351U/M451U	AR-M351U/M451U + AR-NC7	AR-M351U/M451U + AR-NC8
Operating Manual (Copier/Key Operation) *1		
CD-ROM (Printer) *2		
–	CD-ROM (NIC)	
Maintenance card/Maintenance case		
Installation Report/Other		
Key Sheet (PRINT display) *1		Key Sheet (PRINT display)
Key Sheet (DOCUMENT FILING display)		Key Sheet (DOCUMENT FILING display) *1

*1: For the Europe model, this manual is included in the operation manual kit for language support.
The standard language for the key sheet is English. To support local language, attach the key sheet.

*2: For the Europe model, two driver CD's are provided for language support.

B. AR-M351U/M451U (Except for Europe)

1) Release the joint, and remove the packing case.
2) Remove the top pad, and open the electrostatic polyethylene bag.

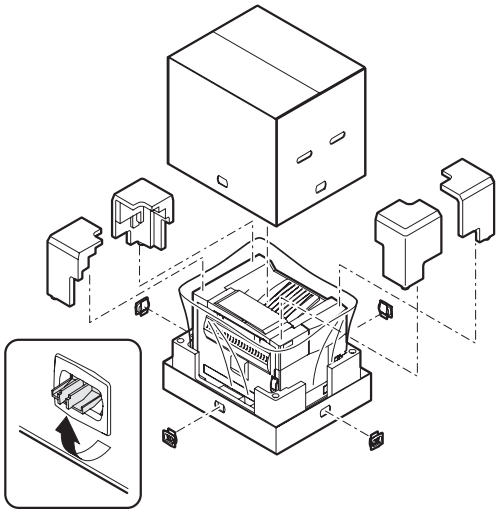

Check the following items are included in the package.

AR-M351U/M451U	AR-M351U/M451U + AR-NC7	AR-M351U/M451U + AR-NC8
Operating Manual (Copier/Key Operation) *1		
CD-ROM (Printer) *2		
–	CD-ROM (NIC)	
Maintenance card/Maintenance case		
Installation Report/Other		
Key Sheet (PRINT display) *1		Key Sheet (PRINT display)
Key Sheet (DOCUMENT FILING display)		Key Sheet (DOCUMENT FILING display) *1

3) Remove the cushioning materials from the right and left of the front side.

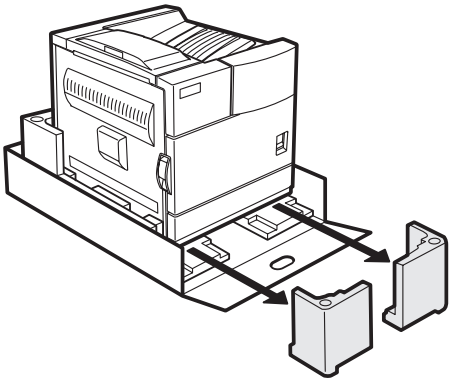

4) Remove the locking tape from the right and left sidesof the tray.

   Then, Remove the top of the carton and lower the plastic bag covering the machine while the machine is still on the carton base.

5) Remove the packing tape from the paper tray, pull out the paper tray until it stops and remove it by tilting it upward.

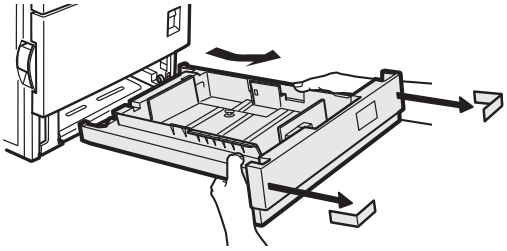

6) One person must lift by the empty front tray pocket with the right hand and steady the machine with the left hand placed at the upper left of the machine.

   The other person must lift with the right hand by using the lifting recess in the rear of the machine and also steady the machine with the left hand as shown in the illustration.

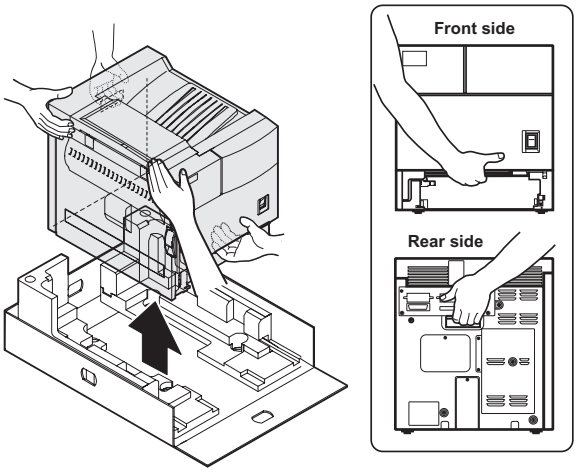

Note: The center of gravity of the machine lies in the left side when viewed from the Back of machine. When lifting the machine, be careful not to drop it.

4. Remove the locking tape (AR-M355U/M455U (North America), AR-M351U/M451U (Europe))

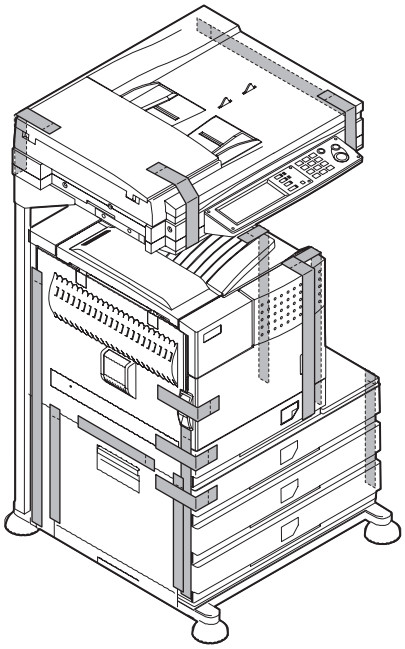

5. Unpacking and installation of the desk unit

Note: In advance to installation of the machine, the paper feed option units (AR-D27/AR-D28/AR-MU2) should have been installed.

A. AR-D28

<Before installation>

- Start installation after checking that the DATA and COMMUNICATION indicators on the operation panel are neither lit nor blinking.

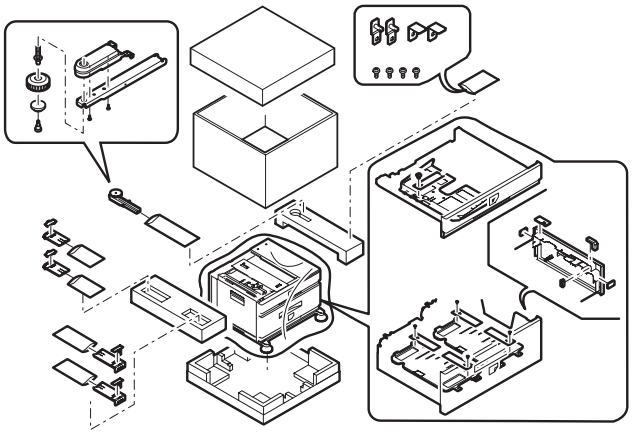

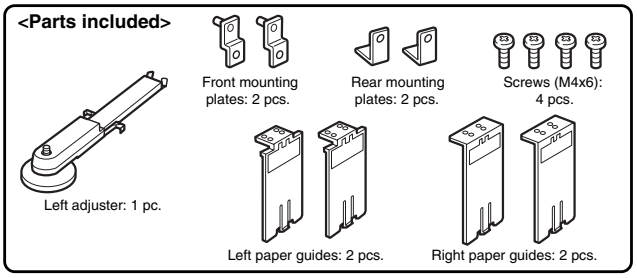

1) Turn off the main switch of the main unit of the printer.
Turn the main switch located on the front side of the printer to the "OFF" position.
Then remove the power plug from the outlet.

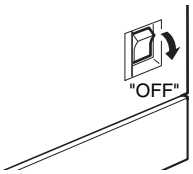

2) Attach the adjusters and adjust them.

<1> Insert the left adjusters to the stand/paper drawer.

<2> Turn the each adjusters to lower them until they touch the floor.

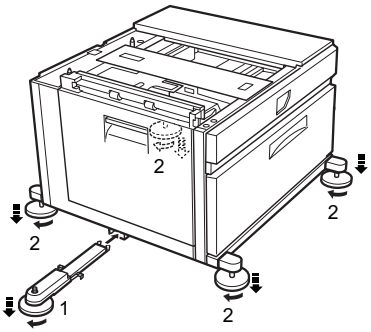

∗ Be sure to attach the left adjuster to prevent overturning.

Caution: The lower tray cannot be pulled out unless the adjuster is lowered to the specified position.

3) Put the main unit of the printer on the stand/paper drawer.

<1> Pull out the paper tray of the main unit until it stops and then remove it by lifting both ends of the tray.

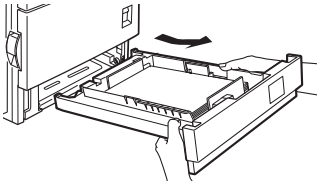

<2> Hold the main unit of the printer at the positions shown in the illustration and put the main unit on the stand/paper drawer so that the front side and the left side of the main unit are aligned to those of the stand/paper drawer.

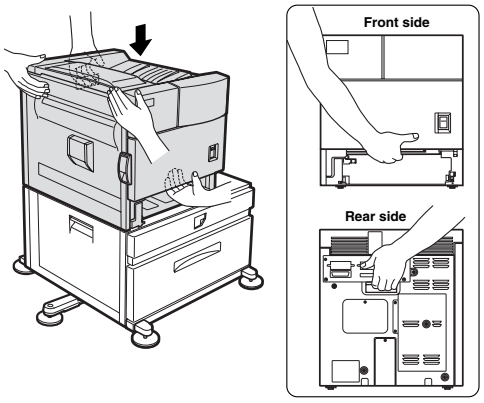

Caution: For installation of the main unit, it must be held by two persons and installed without haste.

4) Connect the main unit to the stand/paper drawer.

<1> Attach the rear mounting plates using a supplied screw for each.

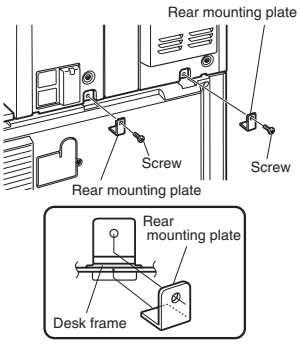

Caution: Insert the rear mounting plates under the desk frame.

<2> Pull out the upper paper tray of the stand/paper drawer until it stops and attach the front mounting plates using a supplied screw for each.
Then, remove the lock of the paper tray and close the tray.

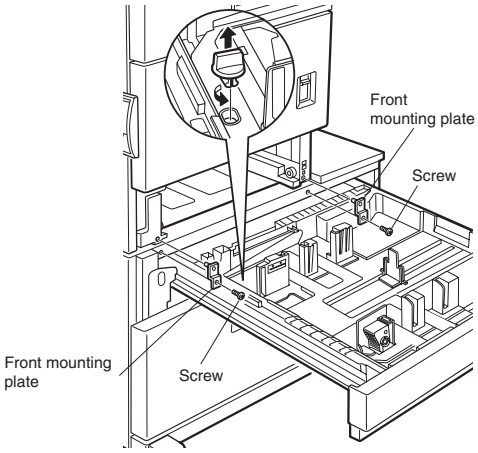

<3> Reattach the paper tray of the main unit.

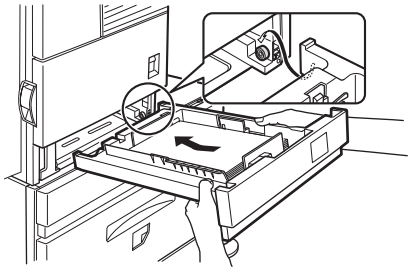

5) Connect the power supply I/F harness to the PCU PWB of the main unit of the printer.

<1> Remove the screw that fixes the harness cover of the main unit of the printer and slide the harness cover up to remove it. Process the harness cover as shown in the illustration.

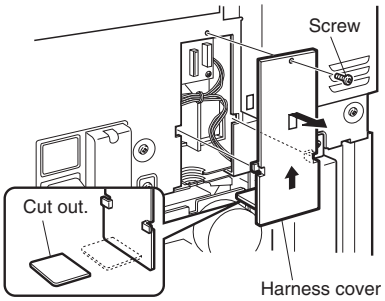

<2> Connect the power supply I/F harness connector (red, 22pin) to CN11 (red connector) of the PCU PWB of the main unit of the printer.

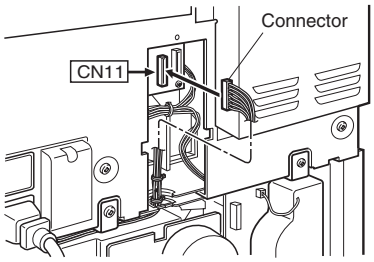

Connect the connector (white, 4pin) of power supply I/F harness to the I/F connector (white, 4pin) of the main unit.
Remove the M4 screw shown in the illustration, insert the circle terminal of ground harness, and it fixes again.

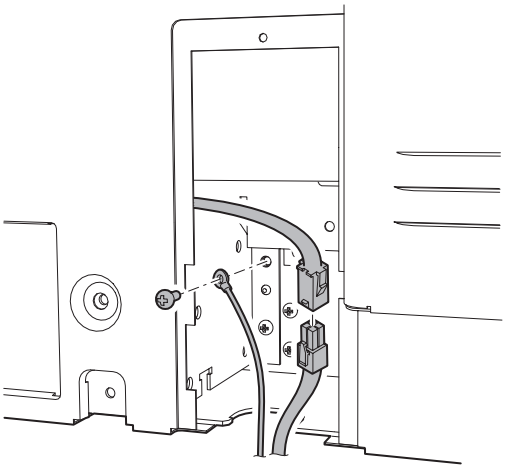

<3> Reattach the power supply I/F harness cover to its original position and fix it with the removed screw.
At this time, ensure that the power supply I/F harness are arranged as shown in the illustration.

- Fix the harness securely to the wire saddle.

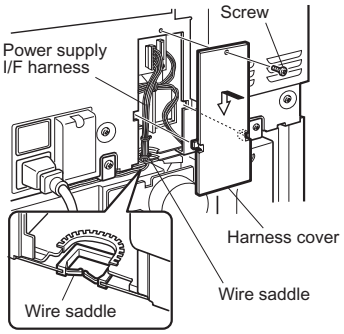

6) Attach the paper guides to the lower tray (large capacity tray) and set the size.
Refer to "Setting and adjustment" described later.

* If another peripheral device must be installed, carry out the following step at the end of the installation work.

7) Adjust the position of the paper guides of the upper paper tray of the stand/paper drawer.
Refer to "Setting and adjustment" described later.

8) Carry out the off center adjustment.

B. AR-D27

<Before installation>

- Start installation after checking that the DATA and COMMUNICATION indicators on the operation panel are neither lit nor blinking.

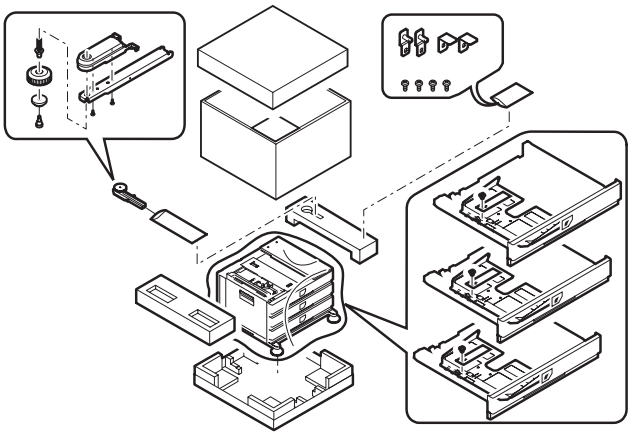

<Parts included>

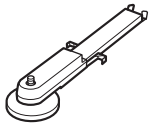

Left adjuster: 1 pc.

Front mounting plates: 2 pcs.

Rear mounting plates: 2 pcs.

Screws (M4x6): 4 pcs.

1) Turn off the main switch of the main unit of the printer.
Turn the main switch located on the front side of the printer to the "OFF" position.
Then remove the power plug from the outlet.

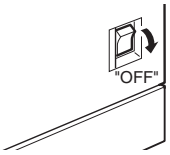

2) Attach the adjusters and adjust them.

<1> Insert the left adjusters to the stand/paper drawer.

<2> Turn the five adjusters to lower them until they touch the floor.

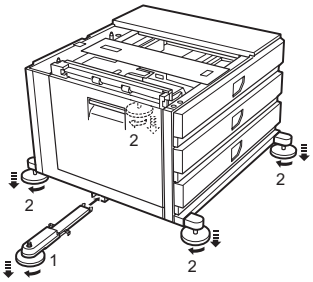

* Be sure to attach the left adjuster to prevent overturning.

Caution: The lower tray cannot be pulled out unless the adjuster is lowered to the specified position.

3) Put the main unit of the printer on the stand/paper drawer.

<1> Pull out the paper tray of the main unit until it stops and then remove it by lifting both ends of the tray.

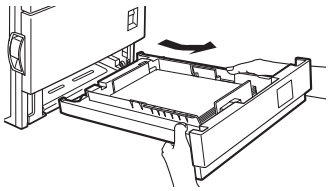

<2> Hold the main unit of the printer at the positions shown in the illustration and put the main unit on the stand/paper drawer so that the front side and the left side of the main unit are aligned to those of the stand/paper drawer.

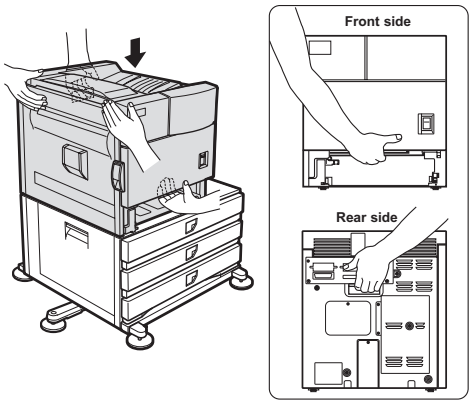

Caution: For installation of the main unit, it must be held by two persons and installed without haste.

4) Connect the main unit to the stand/paper drawer.

<1> Attach the rear mounting plates using a supplied screw for each.

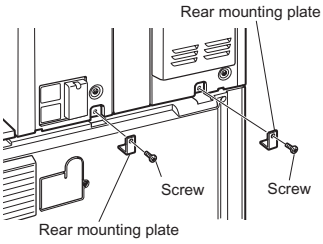

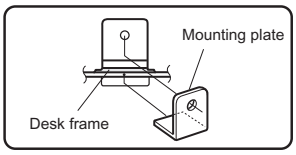

Caution: Insert the rear mounting plates under the desk frame.

<2> Pull out the upper paper tray of the stand/paper drawer until it stops and attach the front mounting plates using a supplied screw for each.
Then, remove the lock of the paper tray and close the tray.
Remove the locks of the middle tray and the lower tray similarly.

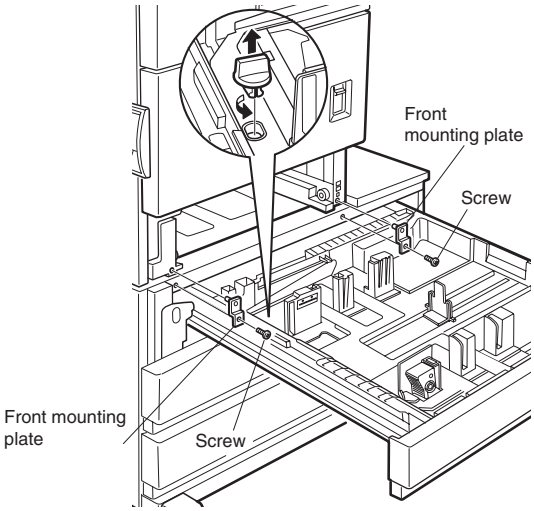

<3> Reattach the paper tray of the main unit.

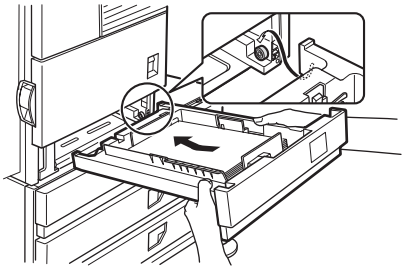

5) Connect the power supply I/F harness to the PCU PWB of the main unit of the printer.

<1> Remove the screw that fixes the harness cover of the main unit of the printer and slide the harness cover up to remove it. Process the harness cover as shown in the illustration.

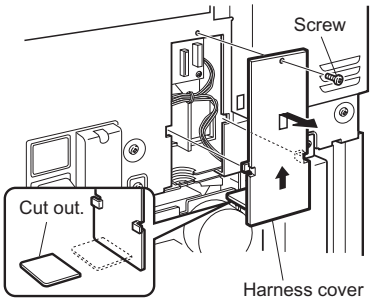

<2> Connect the power supply I/F harness connector (red, 22pin) to CN11 (red connector) of the PCU PWB of the main unit of the printer.

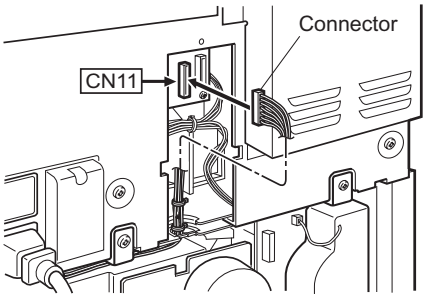

Connect the connector (white, 4pin) of power supply I/F harness to the I/F connector (white, 4pin) of the main unit.
Remove the M4 screw shown in the illustration, insert the circle terminal of ground harness, and it fixes again.

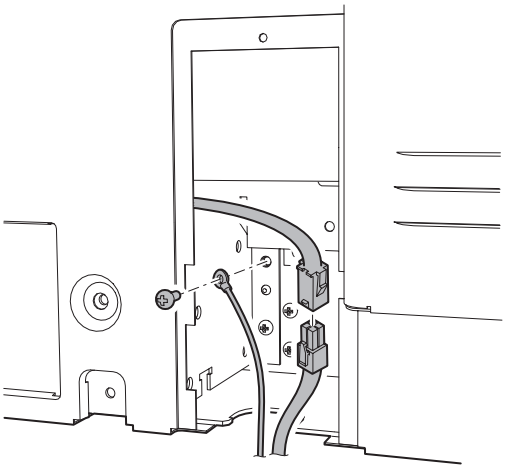

<3> Reattach the harness cover to its original position and fix it with the removed screw.
At this time, ensure that the power supply I/F harness is arranged as shown in the illustration.

- Fix the harness securely to the wire saddle.

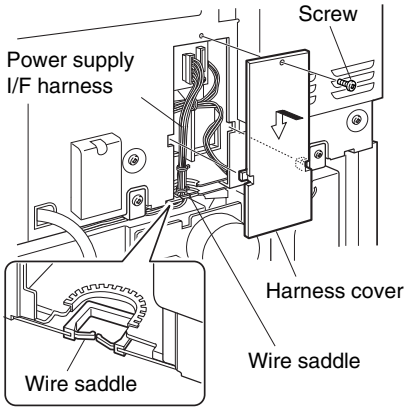

6) Adjust the position of the paper guides of the upper paper tray of the stand/paper drawer.
Refer to "Setting and adjustment" described later.

7) Carry out the off center adjustment.

C. AR-MU2

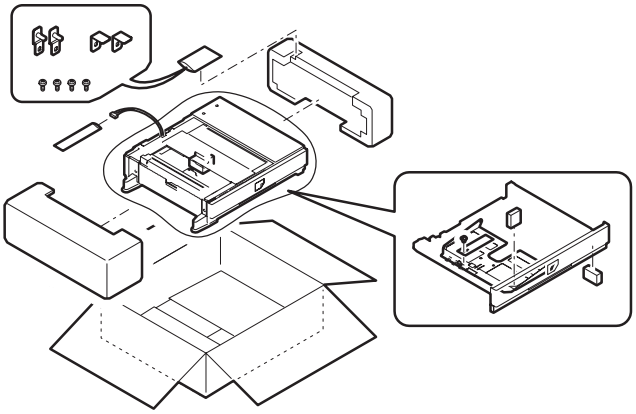

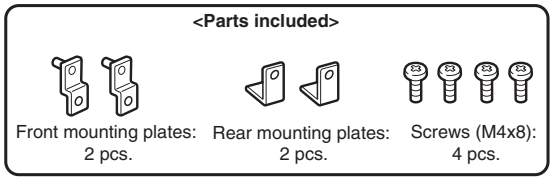

1) Turn off the main switch of the main unit of the printer.
Turn the main switch located on the front side of the main unit to the "OFF" position.
Then, remove the power plug of the main unit from the outlet.

2) Put the main unit of the printer on the multi purpose drawer.

<1> Pull out the paper tray of the main unit until it stops and then remove it by lifting both ends of the tray.

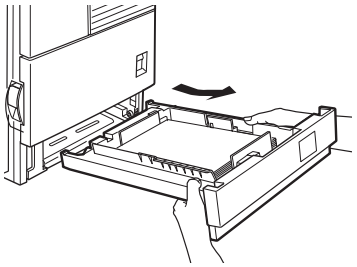

<2> Hold the main unit of the printer at the positions shown in the illustration and put the main unit on the multi purpose drawer so that the front side and the left side of the main unit are aligned to those of the multi purpose drawer.

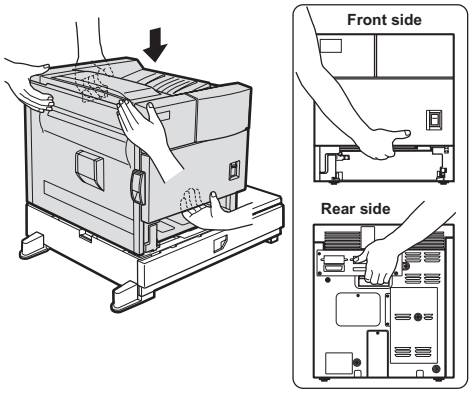

Caution: For installation of the main unit, it must be held by two persons and installed without haste.

3) Connect the main unit of the printer to the multi purpose drawer.

<1> Attach the rear mounting plates using a supplied screw for each.

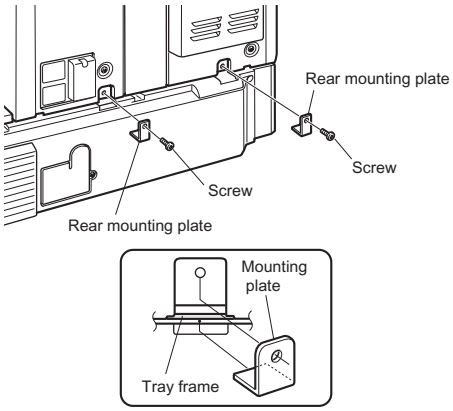

Caution: Insert the mounting plate under the desk frame.

<2> Pull out the paper tray of the multi purpose drawer until it stops and attach the front mounting plates using a supplied screw for each.
Then, remove the lock of the paper tray and close the tray.

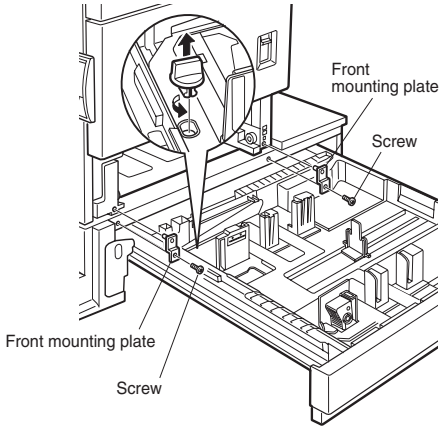

<3> Reattach the paper tray of the main unit of the printer.

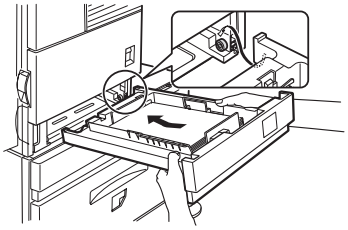

4) Remove the multi rear cabinet.

<1> Remove the two screws that secure the multi rear cabinet.

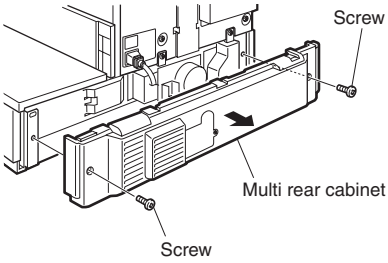

<2> Remove the two screws that secure the Harness protection sheet.

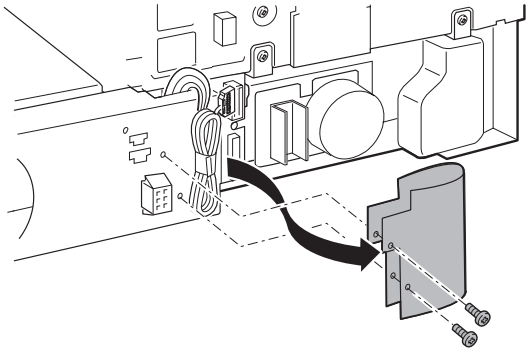

<3> Remove the filament tape that secure the the power supply I/F harness.

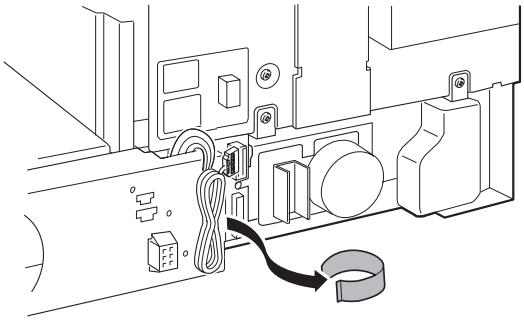

5) Connect the harness to the main unit of the printer.

<1> Remove the screw that fixes the harness cover of the main unit of the printer and then slide the harness cover up to remove it.
Process the harness cover as shown in the illustration.

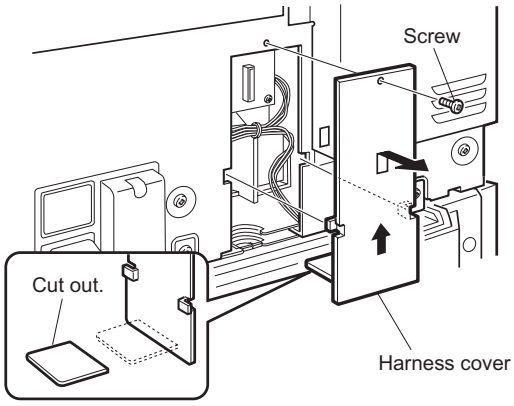

<2> Connect the connector of the relay harness of the multi purpose drawer to the connector of the PCU PWB of the main unit of the printer.

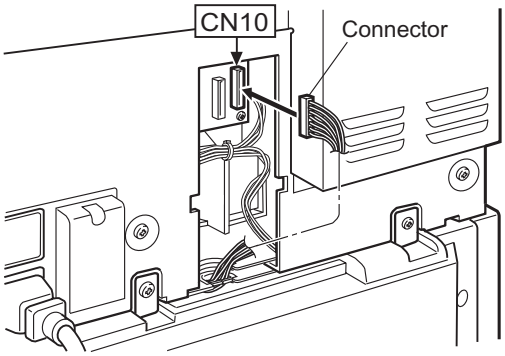

<3> Connect the connector (white, 4pin) of power supply I/F harness to the I/F connector (white, 4pin) of the main unit.
Connect the power supply I/F harness connector (red, 22pin) to CN11 (red connector) of the PCU PWB of the main unit of the printer.
Remove the M4 screw shown in the illustration, insert the circle terminal of ground harness, and it fixes again.

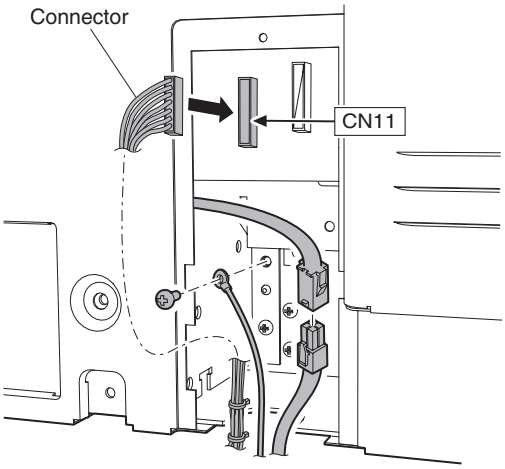

* For installation of a finisher or a mail-bin stacker, see its installation manual.

6) Attach the harness cover.
Reattach the harness cover to its original position and fix it with the removed screw.
At this time, ensure that the power supply I/F harness is arranged as shown in the illustration.

• Fix the harness securely to the wire saddle.

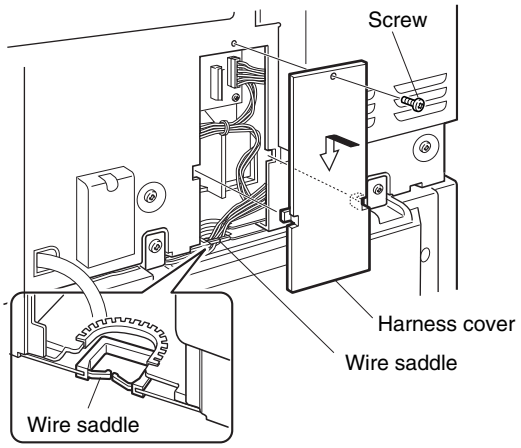

* If another peripheral device must be installed, carry out the following step at the end of the installation work.

7) Adjust the position of the paper guides of the paper tray.
Refer to "Setting and adjustment" described later.

8) Carry out the off center adjustment.

6. Unpacking and installation of the rack (AR-RK2) (Except for North America/ Europe)

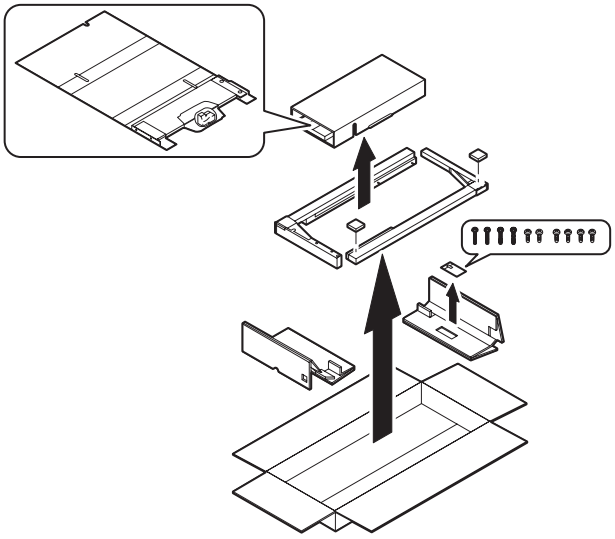

1) Attach the rack to the desk unit.

★ Be sure to identify the left and the right racks. Refer to the figure below.

Insert the rack boss into the rack mounting hole (made by removing the mold of the desk unit), and fix each rack with two fixing screws (M5 x 70).

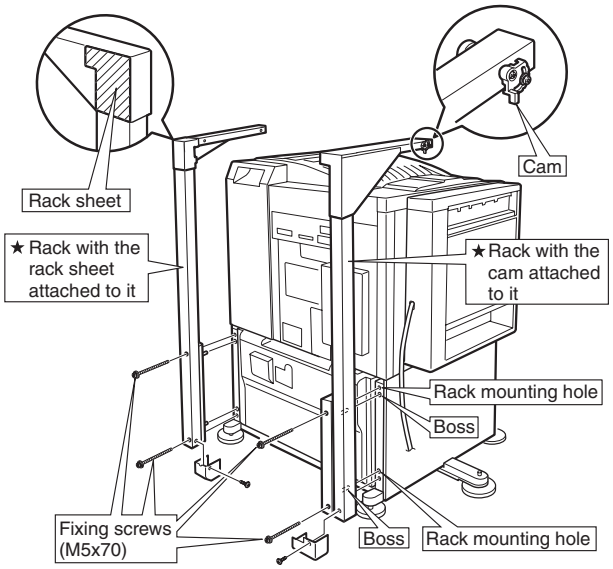

2) Attach the rack bottom plate.

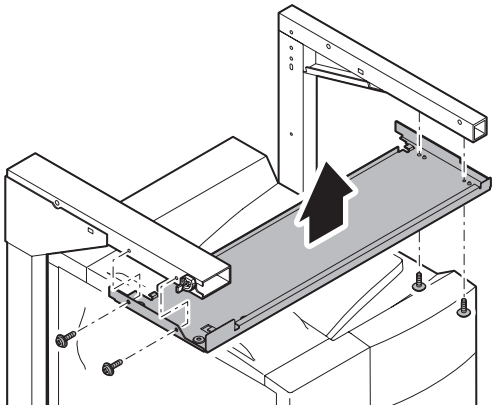

7. Unpacking and installation of the AR-EF3 (Except for North America/ Europe)

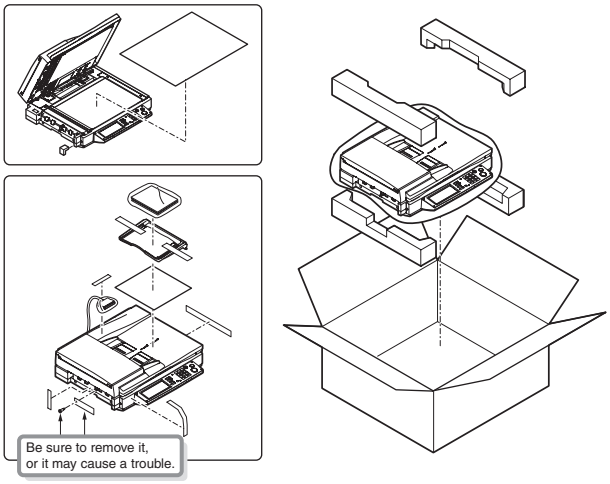

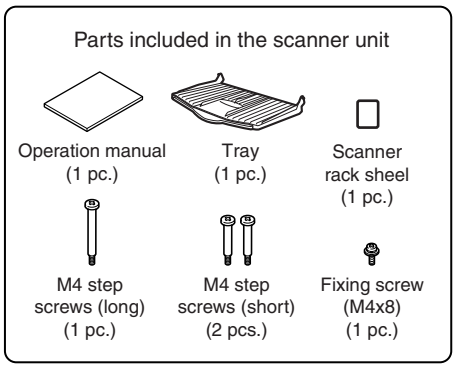

1) Turn off the main switch of the main unit of the printer.

   Turn the main switch located on the front side of the printer to the "OFF" position.

   Then remove the power plug from the outlet.

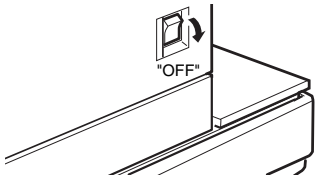

2) Put the scanner unit on the rack.

   Hold the handle of the scanner unit, and put the scanner unit on the rack from the front side of the rack as shown in the figure. Slowly slide the scanner unit until it is brought into contact with the rack and stopped.

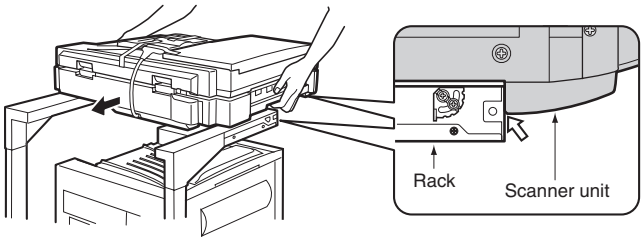

3) Fix the scanner unit.

   Fix the scanner unit which is on the rack with the fixing screw (M4 x 8), and fix it to the rack with the M4 step screw (long, short x 2).

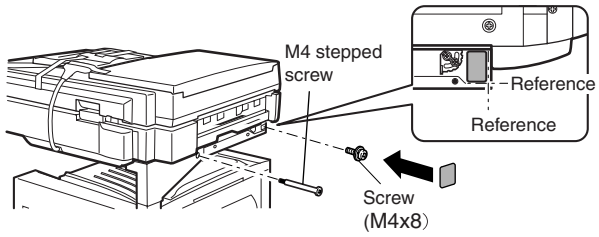

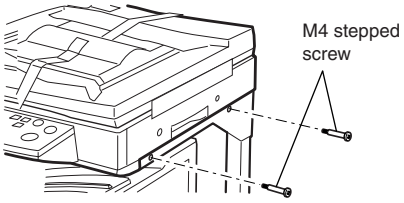

4) Remove the fixing tape for scanner packing and remove the fixing screw.

   Remove the pack fixing tape and the fixing screws which are fixing the scanner unit, and remove the packing note.

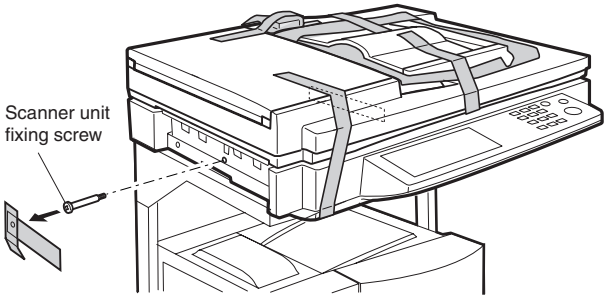

5) Connect the cable.

   Connect the scanner unit connector with the printer connector, and fix the connectors with two screws attached to the connector.

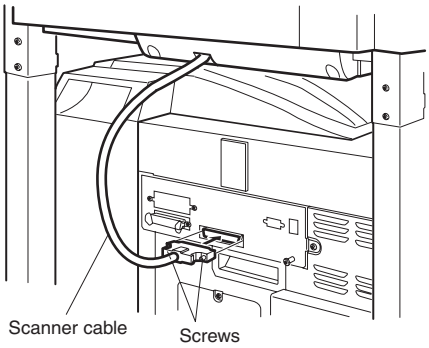

Note: When inserting the connector, be careful not to break the pins, and connect according to the guide.

6) Attach the paper exit tray.

   Attach the paper exit tray to the scanner unit as shown in the figure.

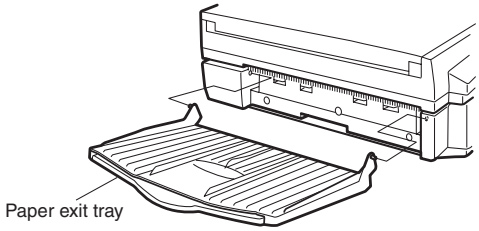

8. Machine installing procedure

A. Setting related to process

1) Open the left door and the front door.

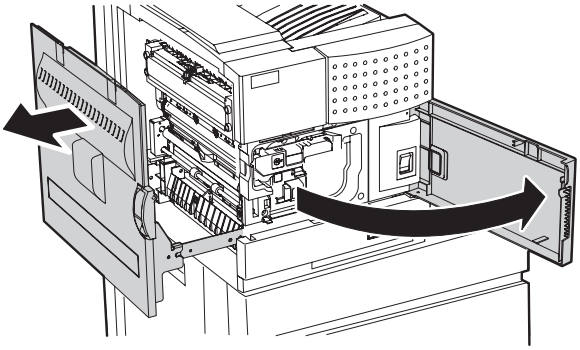

2) Remove the developer cartridge from the machine.

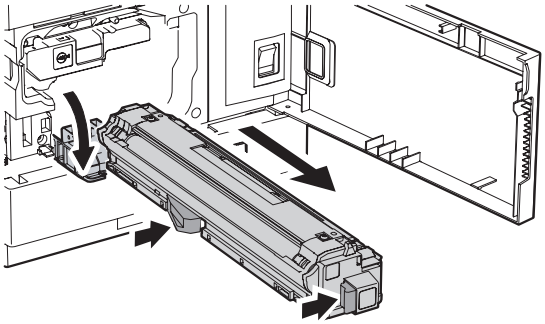

3) Remove the top cover of the developer cartridge.

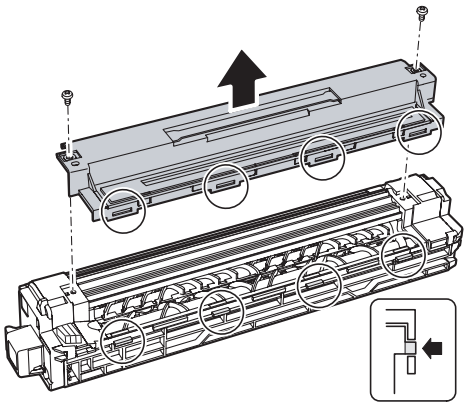

4) While rotating the MG roller, supply developer into the developer cartridge evenly.

   Note that the MG roller must be rotated in the arrow direction as shown in the figure below.

   Use of a metal scale or a screwdriver (-) facilitates the procedure.

Note: Before opening the developer seal, shake it 4 or 5 times.

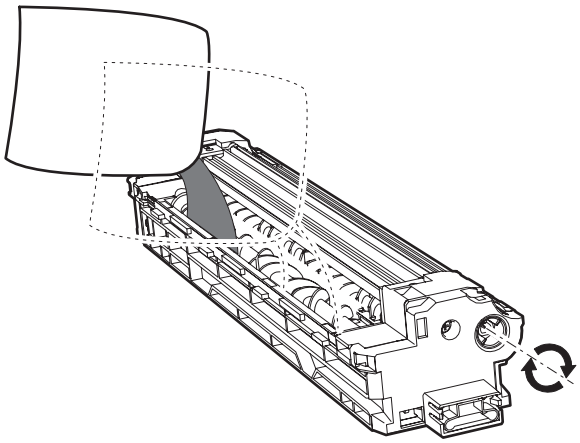

5) Attach the top cover to the developer cartridge and install the cartridge to the machine.

B. Toner cartridge settings

1) Remove a new toner cartridge from the package and shake it horizontally five or six times.

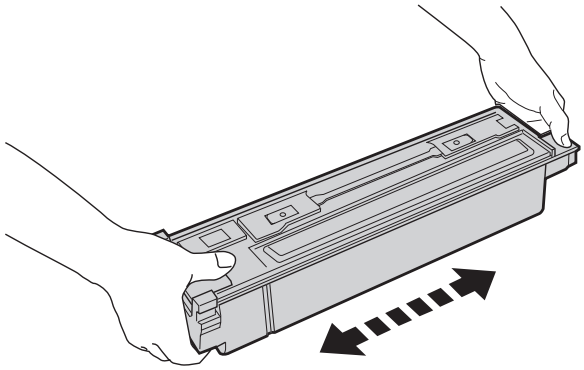

2) Insert a new toner cartridge.

   Push the cartridge in until it locks securely into place.

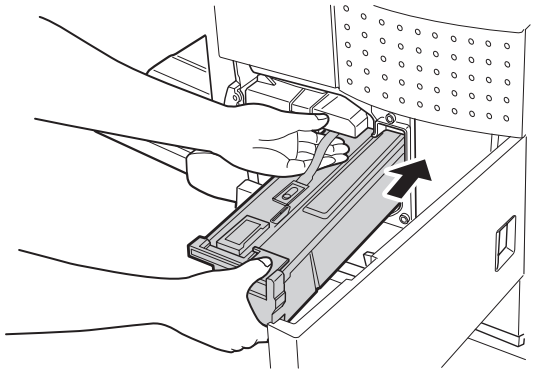

3) Gently remove the sealing tape from the cartridge.

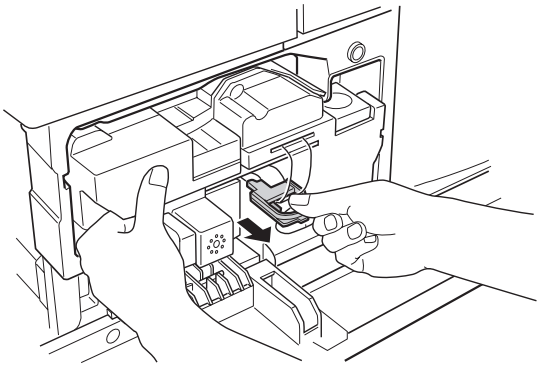

4) Return the cartridge lock lever.

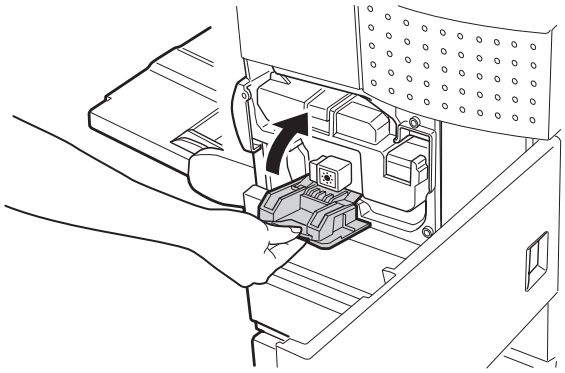

C. Setting related to fusing

1) Put down the right and the left levers of the fusing unit in the arrow direction.

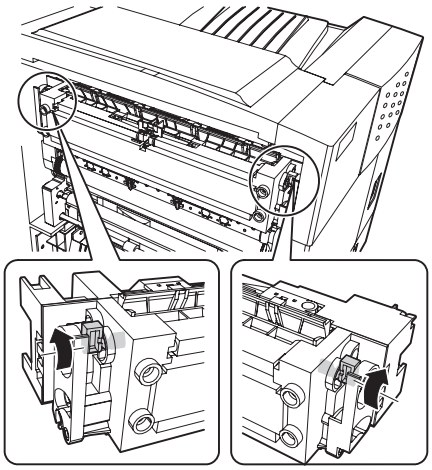

D. Paper setting

1) Pull out the first stage paper feed tray.
   Slowly pull out the tray until it stops.

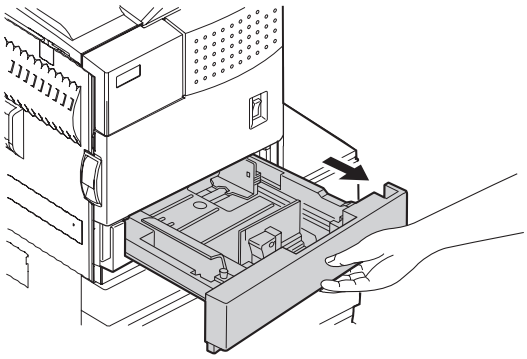

2) While pressing the paper holding plate, remove the fixing pin.

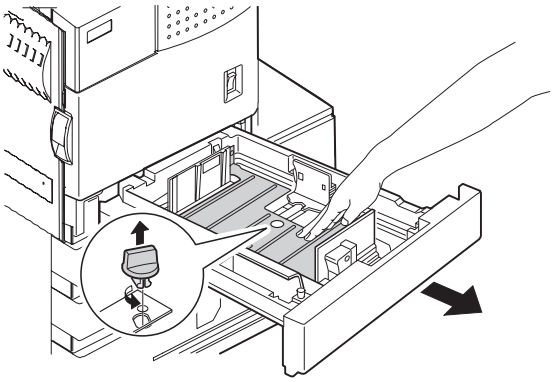

3) Put paper in the tray, and close the paper feed tray.

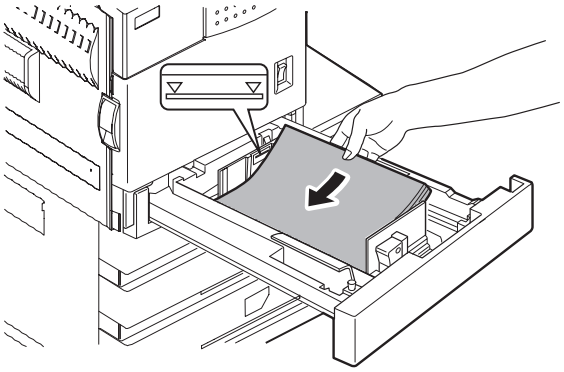

9. Automatic developer adjustment

1) Attach the cabinets which were removed.
2) Close the left door.
   At that time, keep the front door open.

Note: The automatic developer adjustment must be performed by entering the simulation mode with the front door open. If the power is turned on with the front door closed, warm-up is performed to supply toner to the developing unit. As a result, the reference toner density cannot be obtained.

3) Insert the power plug into the power outlet.
4) Go through the modes specified in Simulation 25-2.
5) Close the front door.

(LCD Display)

```
SIMULATION 25-2
AUTOMATIC DV ADJUSTMENT. PRESS START.
HUMIDITY AREA:      70.0 -  72.5
TEMPERATURE AREA:   70.0 -  72.5
DEVE REFERENCE: 128
```

Press [START] key.

Press [CUSTOM SETTINGS] key, and the operation is stopped immediately or after 2 min.

```
SIMULATION 25-2
AUTOMATIC DV ADJUSTMENT. EXECUTING···.
HUMIDITY AREA:      70.0 -  72.5
TEMPERATURE AREA:   70.0 -  72.5
DEVE REFERENCE: 118
```

6) Press the [START] key, and the automatic developer adjustment will be performed.
   During execution of the automatic developer adjustment, “EXECUTING...” is displayed and the toner sensor value is indicated on the LCD. (DEVE REFERENCE)

7) After about 2 min, the adjustment value is stored in the machine. Check that the mode was normally completed.

   Normal end: Returns to the initial window (PRESS START display).

   Abnormal end: Returns to the initial window (PRESS START display), and indicates the trouble display (TROUBLE! EE-**).

   In case of an error end, remove the cause of the error, and execute the automatic developer adjustment again.

8) Turn off/on the power, and the machine returns to the normal mode and enters the warm-up mode.

10. Print test

1) After completion of warm-up (normal mode), select [CUSTOM SETTINGS] → [Data list up] to display the menu.
2) Print [ALL SETUP LIST] to check and confirm the print quality.
3) Press the [CUSTOM SETTINGS] key again to return to the normal menu.

11. Distortion adjustment (Except for North America/Europe)

Note: This adjustment must be performed after installing the machine and its peripheral devices.

It is basically no need to perform the adjustment because it has been made when shipping. If there should be a distortion as shown in the figure below, perform the adjustment according to the following procedures.

1) Use a level gauge to check to confirm that the scanner unit is installed horizontally.

   Make a copy, and if any distortion is found as shown in Fig 1 or Fig. 2, loosen the scanner fixing screw (M4 x 8) and the cam A fixing screw (M3 x 12) to make an adjustment.

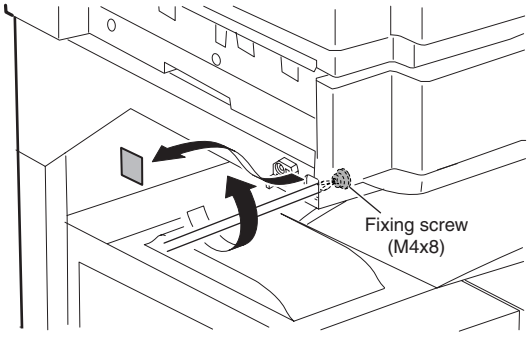

[Fig. 1]

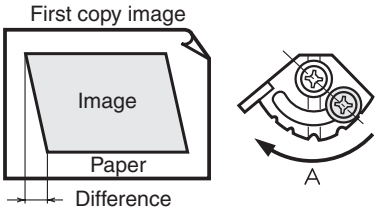

- **Case of Fig. 1**

Shift the cam A in the direction of A by the difference of the image.

For one scale (one groove), shift by 0.5mm.

After shifting the cam, tighten the cam A fixing screw (M3 x 12). Make a copy again and check to confirm that there is no distortion on the image.

[Fig. 2]

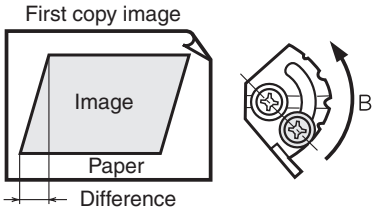

- **Case of Fig. 2**

Shift the cam A in the direction of B by the difference of the image.

For one scale (one groove), shift by 0.5mm.

After shifting the cam, tighten the cam A fixing screw (M3 x 12). Make a copy again and check to confirm that there is no distortion on the image.

After adjustment, tighten the fixing screw (M3 x 12) and the scanner fixing screw (M4 x 8).

Attach the decoration seal to the screw hole.

(DSPF scan position automatic adjustment)

1) Execute SIM 53-8 after completion of the distortion adjustment.
2) If any distortion is made after execution of the simulation, execute the MB rail position adjustment. (Refer to "3-A OC scan distortion adjustment (MB-B rail height adjustment)" in [8] ADJUSTMENTS.)

12. Attach the document scanning label

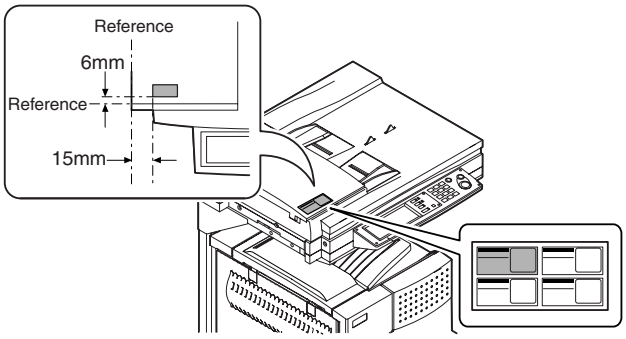

13. Key sheet attachment

Attach the key sheet to the specified position on the operation panel according to the support table below.

<North America only>

	AR-M355U/ M455U	AR-M355U/ M455U + AR-P20	AR-M355U/ M455U + AR-P21
Key Sheet (PRINT display)	❍	❍	×

<English area other than North America>

	AR-M351U/ M451U	AR-M351U/ M451U + AR-NC7	AR-M351U/ M451U + AR-NC8
Key Sheet (PRINT display)	❍	❍	×

<Other than English area in Europe>

	AR-M351U/ M451U	AR-M351U/ M451U + AR-NC7	AR-M351U/ M451U + AR-NC8
Key Sheet (PRINT display)	❍	❍	×
Key Sheet (DOCUMENT FILING display)	×	×	❍

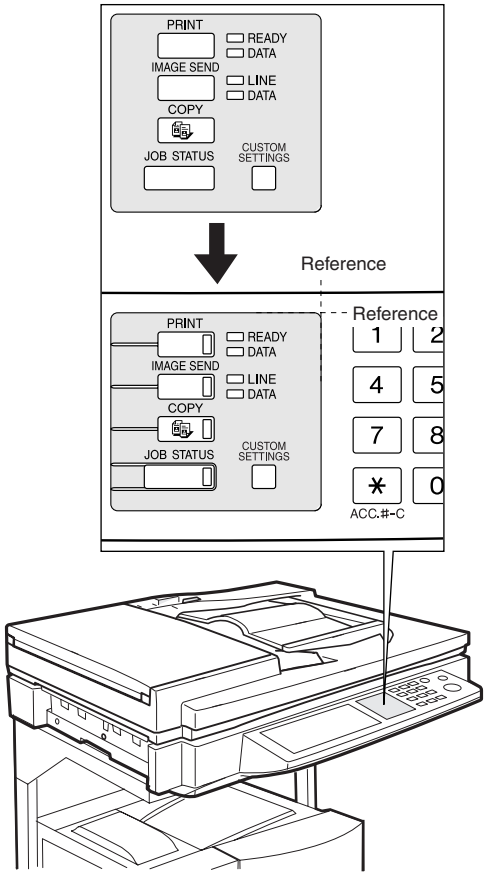

14. Adjuster installation and adjustment

1) Insert the left adjuster into the paper feed desk.
2) Turn each adjuster until it is brought into contact with the floor.

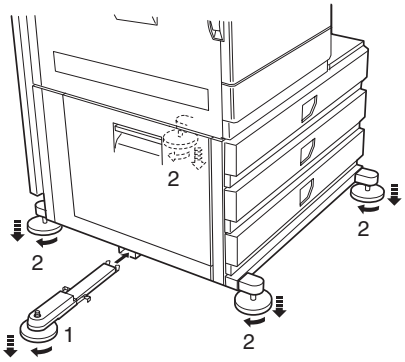

* Be sure to install the left adjuster in order to prevent falling down of the machine.

Note: If the adjusters are not lowered to the specified positions, the lower stage tray cannot be pulled out.

15. Using the transport handle

1) Remove the screw, and remove the handle.

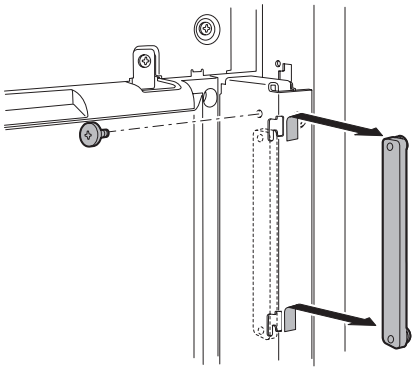

2) Insert the handle into the left rack notch diagonally upward as shown in the figure.
3) Attach the screw which was removed in procedure 1) to secure the handle.

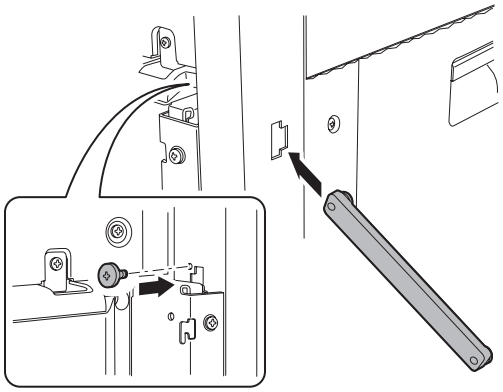

4) Lift the rear edge Ⓐ of the handle to engage the head with the rack.

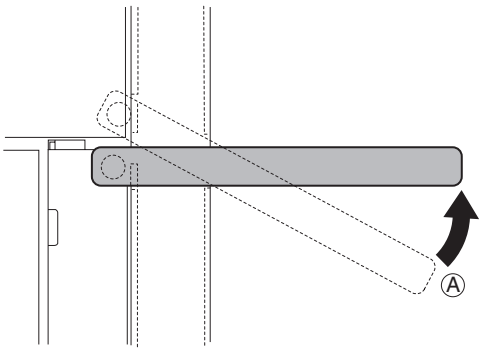

5) After completion of transport, restore the handle to the original position.

[7] MAINTENANCE AND DETAILS OF EACH SECTION

- Self print of set values
  Use of SIM 22-6 allows to print the set values and the jam history of the machine.
  These values must be printed before execution of maintenance or disassembly procedures.

- When assembling, check that the flat cable and the harness connectors are securely connected.
- When connecting the flat cable, be careful not to break the pins.
  When installing the PWB unit and the memory module, use an earth band to prevent against breakage by static electricity.

[Maintenance System Table]

1. Engine section

Maintenance cycle : 200K

× Check (Clean, replace, or adjust as necessary.) ❍ Clean ▲ Replace Δ Adjust ☆ Lubricate ❑ Move position

Unit name	Part name	When calling	100K	200K	300K	400K	500K	600K	700K	800K	Remark
Drum peripheral	Drum		×	▲	×	▲	×	▲	×	▲	Replace at 200K or 1 year.
	Cleaner blade		×	▲	×	▲	×	▲	×	▲	
	Toner reception seal		×	▲	×	▲	×	▲	×	▲	
	Side molt F		×	▲	×	▲	×	▲	×	▲	
	Side molt R		×	▲	×	▲	×	▲	×	▲	
	Transfer roller	×	×	▲	×	▲	×	▲	×	▲	
	Discharge plate	×	×	▲	×	▲	×	▲	×	▲	
	TR bearing (F/R)		×	×	×	▲	×	×	×	▲	
	Transfer roller collar		×	×	×	▲	×	×	×	▲	
	After-transfer star ring		×	×	×	×	×	×	×	×	
	TR gear	×	×	▲	×	▲	×	▲	×	▲	
	Drum separation pawl unit		×	▲	×	▲	×	▲	×	▲	
	MC unit	×	❍	▲	❍	▲	❍	▲	❍	▲	Includes the screen grid, the charging plate, and the MC cleaner. ❍: Charging plate cleaning by the MC cleaner
	Paper guide	❍	❍	❍	❍	❍	❍	❍	❍	❍	
Developing section	Developer		▲	▲	▲	▲	▲	▲	▲	▲	Supplied when installing
	DV blade		×	▲	×	▲	×	▲	×	▲	
	DSD collar		❍	❍	❍	❍	❍	❍	❍	❍	
	DV side seal F		×	▲	×	▲	×	▲	×	▲	
	DV side seal R		×	▲	×	▲	×	▲	×	▲	
	Toner cartridge		–	–	–	–	–	–	–	–	Attached when installing./ 750g, user replacement for every 35K.
Fusing section	Upper heat roller	×	×	▲	×	▲	×	▲	×	▲	
	Lower heat roller	×	×	▲	×	▲	×	▲	×	▲	
	Upper separation pawl	❍	❍	▲	❍	▲	❍	▲	❍	▲	
	Lower separation pawl	❍	❍	▲	❍	▲	❍	▲	❍	▲	
	Thermistor	×	×	×	×	×	×	×	×	×	Clean and remove paper dust.
	Upper heat roller gear		×	▲	×	▲	×	▲	×	▲	
	Paper guides	❍	❍	❍	❍	❍	❍	❍	❍	❍	
	Gears		☆	☆	☆	☆	☆	☆	☆	☆	
	CL roller	×	×	▲	×	▲	×	▲	×	▲	
	CL roller bearing	×	×	▲	×	▲	×	▲	×	▲	
Filters	Ozone filter		▲	▲	▲	▲	▲	▲	▲	▲	
Paper feed section	Pick-up roller	×	×	×	×	×	×	×	×	×	Note 1
	Paper feed roller	×	×	×	×	×	×	×	×	×	Note 1
	Separation roller	×	×	×	×	×	×	×	×	×	Note 1
	Torque limiter	×	×	×	×	×	×	×	×	×	Note 1
Transport section Paper exit reverse section	Resist roller	×	❍	❍	❍	❍	❍	❍	❍	❍	
	Transport rollers	×	❍	❍	❍	❍	❍	❍	❍	❍	
	Transport paper guides	❍	❍	❍	❍	❍	❍	❍	❍	❍	
	Paper dust remover unit	❍	❍	▲	❍	▲	❍	▲	❍	▲	
	Optical reflection sensor	❍	❍	❍	❍	❍	❍	❍	❍	❍	PS roller unit section
Drive section	Gears (Specified position)	×	☆	☆	☆	☆	☆	☆	☆	☆	
	Belts	×	×	×	×	×	×	×	×	×	
Image quality		×	×	×	×	×	×	×	×	×	
Other	Sensors		×	×	×	×	×	×	×	×	Cleaning is performed by air blowing.

Note 1: Replacement reference: Use the counter value of each paper feed port as the replacement reference.
Paper feed roller/Separation pad/Torque limiter section (Include Desk, Multi purpose): 100K or 1 years

2. Scanner / DSPF

Maintenance cycle : 200K

× Check (Clean, replace, or adjust as necessary.) ❍ Clean ▲ Replace ∆ Adjust ☆ Lubricate ❑ Move position

Unit name	Part name		When calling	100K	200K	300K	400K	500K	600K	700K	800K	Remark
Optical section	Mirror/Lens/Reflector/Sensors		❍	❍	❍	❍	❍	❍	❍	❍	❍	
	Table glass/Dust-proof glass/OC		❍	❍	❍	❍	❍	❍	❍	❍	❍	
	White reference glass		❍	❍	❍	❍	❍	❍	❍	❍	❍	
	Rails			☆	☆	☆	☆	☆	☆	☆	☆	
	Drive belt/Drive wire/Pulley			×	×	×	×	×	×	×	×	
DSPF	Paper feed section	Pick-up roller	❍	❍	❍	❍	❍	❍	❍	❍	❍	Note 2
		Paper feed roller	❍	❍	❍	❍	❍	❍	❍	❍	❍	Note 2
		Separation mylar lower	❍	❍	❍	❍	❍	❍	❍	❍	❍	Note 2
		Separation pad	❍	❍	❍	❍	❍	❍	❍	❍	❍	Note 2
	Transport section	PS roller	❍	❍	❍	❍	❍	❍	❍	❍	❍	
		Exposure section (Dust-proof glass)	❍	❍	❍	❍	❍	❍	❍	❍	❍	
	Paper exit section	Paper exit roller	❍	❍	❍	❍	❍	❍	❍	❍	❍	
	Other	Sensors		❍	❍	❍	❍	❍	❍	❍	❍	For cleaning, blow air.

Note 2: Replacement reference: Replace by using the SPF counter value as an indication.
Paper feed section pickup roller, paper feed roller, separation pad, separation lower mylar lower:
100K or 1 year

3. Peripheral devices

Maintenance cycle : 50K

× Check (Clean, replace, or adjust as necessary.) ❍ Clean ▲ Replace Δ Adjust ☆ Lubricate ❑ Move position

Option name	Part name		When calling	100K	200K	300K	400K	500K	600K	700K	800K	Remark
Finisher	Transport section	Transport rollers	❍	❍	❍	❍	❍	❍	❍	❍	❍	
		De-curler roller	(❍)×	❍	❍	❍	❍	❍	❍	❍	❍	
		Transport paper guides	×	❍	❍	❍	❍	❍	❍	❍	❍	
	Drive section	Gears	×	☆	☆	☆	☆	☆	☆	☆	☆	(Specified position)
		Belts	×	×	×	×	×	×	×	×	×	
	Other	Sensors	×	×	×	×	×	×	×	×	×	
		Discharge brush	×	×	×	×	×	×	×	×	×	
	Staple unit											Replace unit at 200K staple.
	Staple cartridge											User replacement for every 3000 pcs.
Mail-bin stacker	Transport section	Transport rollers	×	❍	❍	❍	❍	❍	❍	❍	❍	
		Transport paper guides	×	❍	❍	❍	❍	❍	❍	❍	❍	
	Drive section	Gears	×	☆	☆	☆	☆	☆	☆	☆	☆	(Specified position)
		Belts	×	×	×	×	×	×	×	×	×	
	Other	Sensors	×	×	×	×	×	×	×	×	×	
		Discharge brush	×	×	×	×	×	×	×	×	×	
Saddle finisher, punch unit	Transport section	Transport rollers	×	❍	❍	❍	❍	❍	❍	❍	❍	
		Transport paper guides	×	❍	❍	❍	❍	❍	❍	❍	❍	
	Drive section	Gears	×	☆	☆	☆	☆	☆	☆	☆	☆	(Specified position)
		Belts	×	×	×	×	×	×	×	×	×	
	Other	Sensors	×	×	×	×	×	×	×	×	×	
		Discharge brush	×	×	×	×	×	×	×	×	×	
	Staple unit											Replace unit at 300K staple.
	Staple cartridge											User replacement for every 5000 pcs.
	Punch unit											Replace unit at 1000K.
ADU + Manual feed	Paper feed separation section	Paper feed rollers	(❍)×	(❍)×	(❍)×	(❍)×	(❍)×	(❍)×	(❍)×	(❍)×	(❍)×	Note 3
	Transport section	Transport rollers	×	❍	❍	❍	❍	❍	❍	❍	❍	
		Transport paper guides	×	❍	❍	❍	❍	❍	❍	❍	❍	
	Drive section	Gears	×	☆	☆	☆	☆	☆	☆	☆	☆	(Specified position)
		Belts	×	×	×	×	×	×	×	×	×	
	Other	Sensors	×	×	×	×	×	×	×	×	×	

Note 3: Replacement reference: Use the counter value of each paper feed port as the replacement reference.
Paper feed section pickup roller, paper feed roller, separation pad: 100K or 1 year

[DETAILS OF EACH SECTION]

1. Process section

A. General

Toner is attached to electrostatic latent images formed by the laser beams which were radiated to the OPC drum charged by the main charger, forming toner images.

The toner images formed on the OPC drum are transferred to paper by the transfer roller.

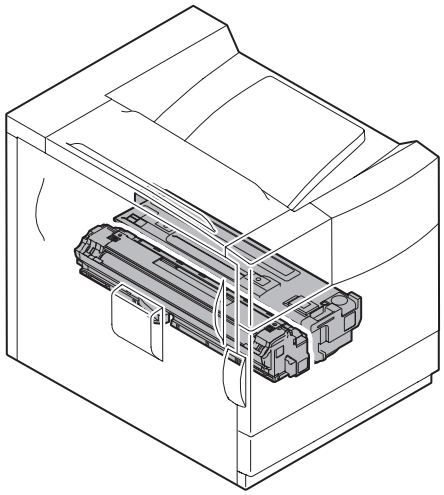

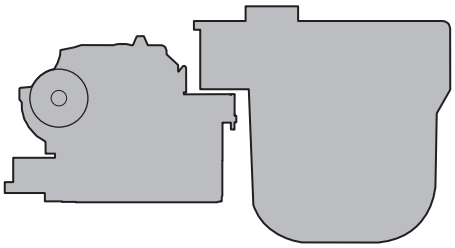

No.	Name	Operation
1	Toner cartridge	Supplies toner to the developing unit, and collects waste toner.
2	Developer unit	Mixes toner and carrier, and attaches toner to electrostatic latent images to form visible images.
3	Transfer roller	Transfers toner images to the OPC drum.
4	Process drum unit	Forms images (electrostatic latent images, visible images) on the OPC drum.
5	Main charger unit	Charges the OPC drum surface negatively and evenly.

Process Section Composition and Applying Voltage

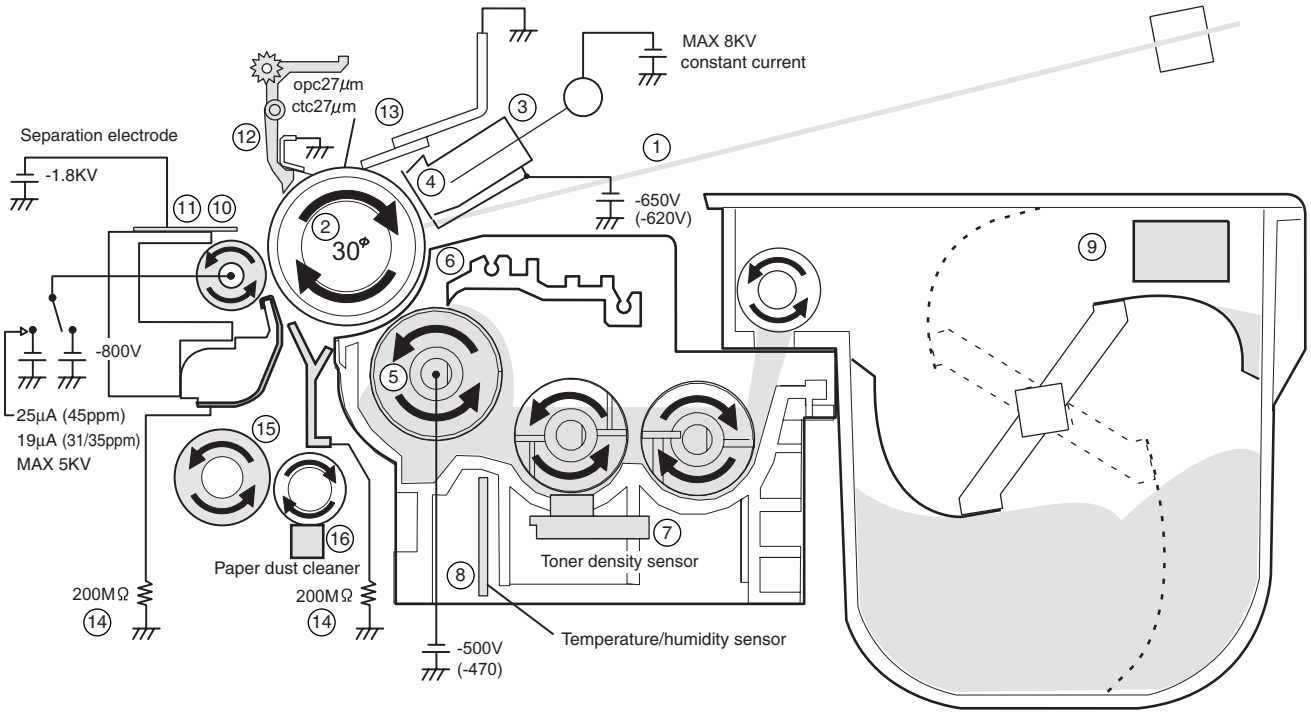

Composition of process section

1	Laser beam	Forms latent electrostatic images on the photoconductor drum. (Writing resolution: 600dpi) The output from LSU can be set with the simulation. (Basically the initial setup is used.)
2	Photoconductor drum	Latent electrostatic images are formed on the photoconductor drum. It attracts toner to the electrostatic images and transfers them to paper. An OPC drum of 30mm diameter is employed.
3	Main charger	Applies a high voltage to charge the OPC drum. Of saw teeth type.
4	Screen grid	Charges electric charges generated from the main charger to the OPC drum evenly. -650V, 35cpm Copy, -620V only for AE.
5	MG roller	Forms a magnetic brush with developer and puts toner on the OPC drum. -500V, 35cpm Copy, -470V only for AE.
6	Developing doctor	Keeps the thickness of developer and toner (magnetic brush) on the MG roller at a constant level.
7	Toner quantity sensor	Detects the quantity of toner in the developing unit. A magnetic sensor of transmission type is employed.
8	Temperature/humidity sensor	The temperature and the humidity inside the machine are detected, and process control is performed according to the detected temperature and humidity.
9	CRUM-IC	Toner cartridge conditions (destination, toner motor rotating time, empty, near empty, etc.)
10	Transfer roller	Applies a voltage to transfer toner on the OPC drum to paper.
11	Separation electrode	The electrode to separate paper from the OPC drum by the potential difference.
12	Drum separation pawl	The pawl to separate paper from the OPC drum mechanically.
13	Cleaning blade	Made of silicon rubber. Removes remaining toner from the OPC drum. Always in contact with the drum.
14	High voltage resistor PWB	Prevents a high voltage from leaking through the paper guide at a high humidity. 200MΩ each.
15	Resist roller	Bends paper to adjust the paper feed timing to the process section.
16	Paper dust cleaner	Removes paper dust from the resist roller to reduce mixing of paper dusts into the process section.

[OPC drum section]

A. General

In this section, laser beams are radiated to the OPC drum surface which was negatively charged, making electrostatic latent images.

B. Major parts and signal functions

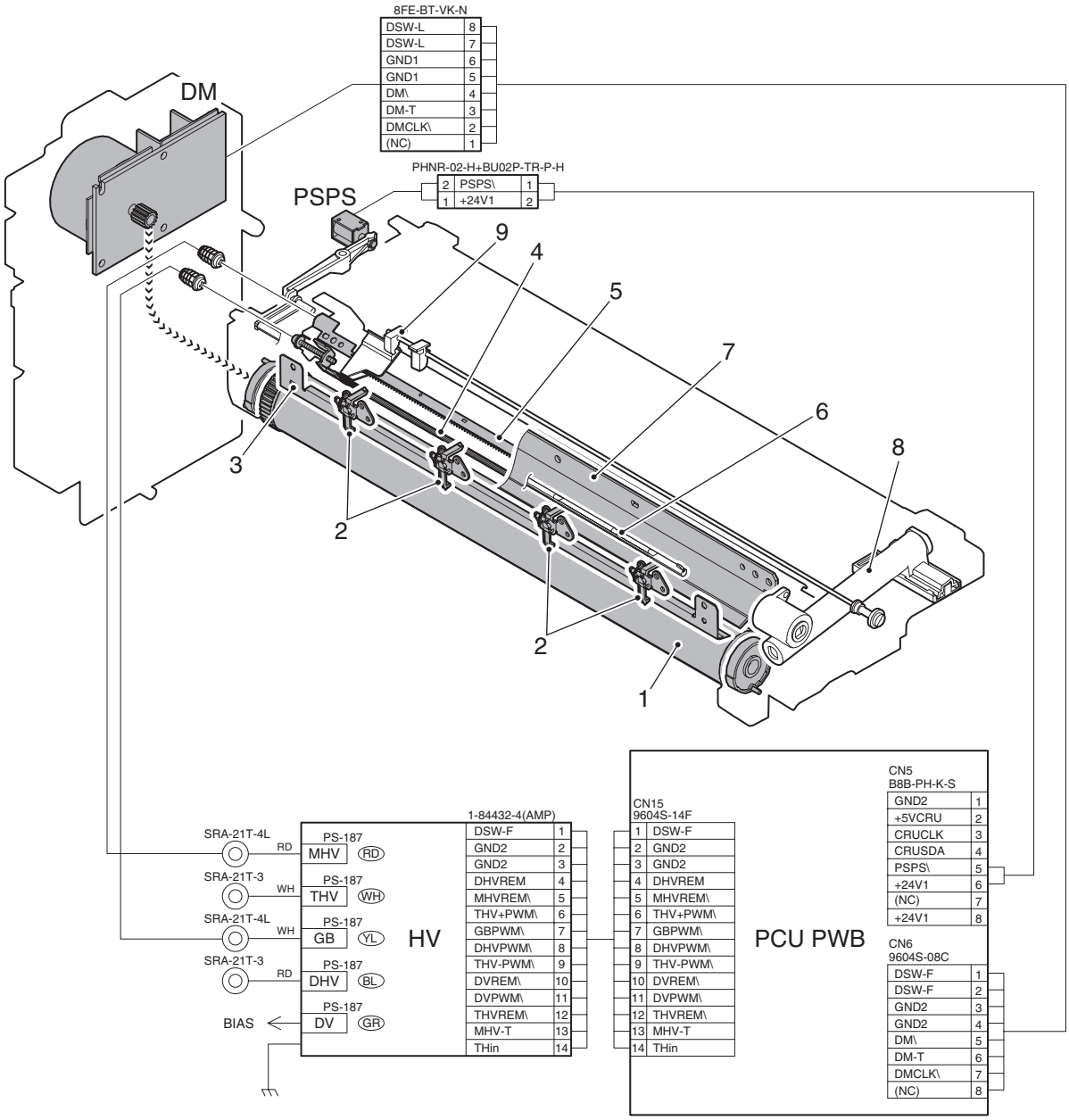

Code	Signal name	Name	Function/Operation	Type	Note
DM	DM	OPC drum motor	Drives the OPC drum and the transfer section.	DC brushless motor	
PSPS	PSPS	Drum separation pawl solenoid	Drives the OPC drum separation pawl	Solenoid	

No.	Name	Operation
1	OPC drum	Forms electrostatic latent images by laser beams.
2	Drum separation pawl	Separates paper from the drum.
3	Sub blade (Cleaning seal)	Prevents against toner leakage from the cleaner section.
4	Screen grid	Helps to charge the OPC drum evenly with electric charges provided from the main charger.
5	Saw-teeth charger	Applies a high voltage to charge the OPC drum.
6	Separation pawl oscillation shaft	Moves in the front and rear frame direction to install the separation pawl.
7	Cleaning blade	Cleans remaining toner on the OPC drum.
8	Waste toner transport pipe	Transports toner from the cleaner unit to the waste toner box in the toner cartridge front section.
9	Cleaning unit	Saw teeth charger is cleaned.

C. Operational descriptions

The OPC drum surface is negatively charged by the main charger. The laser beam images are radiated to the OPC drum surface by the laser unit to form latent electrostatic images.

1) The OPC drum surface is negatively charged by the main charger.

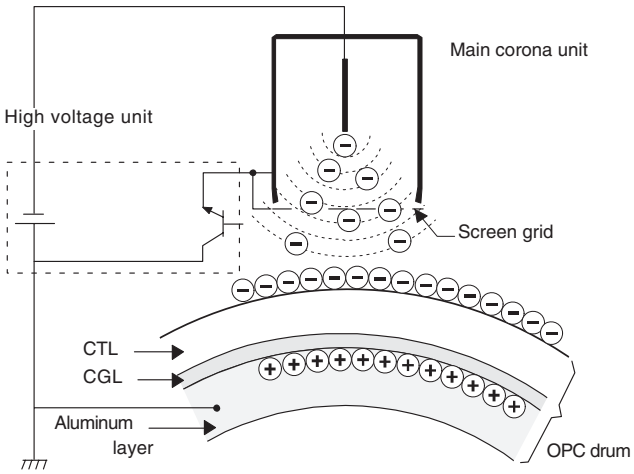

The main charger grid is provided with the screen grid. The OPC drum is charged at a voltage virtually same as the voltage applied to the screen grid.

2) LED lights are radiated to the OPC drum surface by the laser unit to form latent electrostatic images.

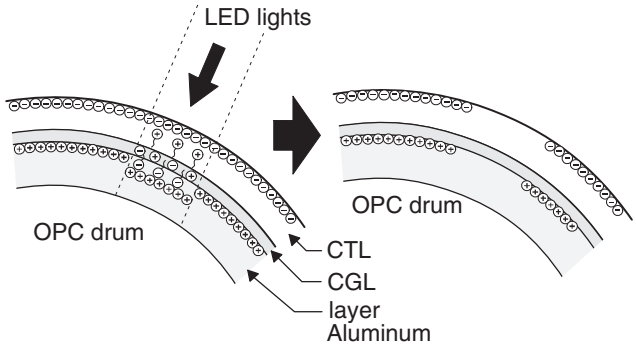

When LED lights are radiated to the OPC drum CGL, negative and positive charges are generated.

Positive charges generated in CGL are attracted to the negative charges on the OPC drum surface. On the other hand, negative charges are attracted to the positive charges in the OPC drum aluminum layer.

Therefore, positive charges and negative charges are balanced out on the OPC drum and in the aluminum layer, reducing positive and negative charges to decrease the OPC drum surface voltage.

Electric charges remain at a position where LED lights are not radiated.

As a result, latent electrostatic images are formed on the OPC drum surface.

3) After transfer operation, remaining toner is removed by the cleaning blade.

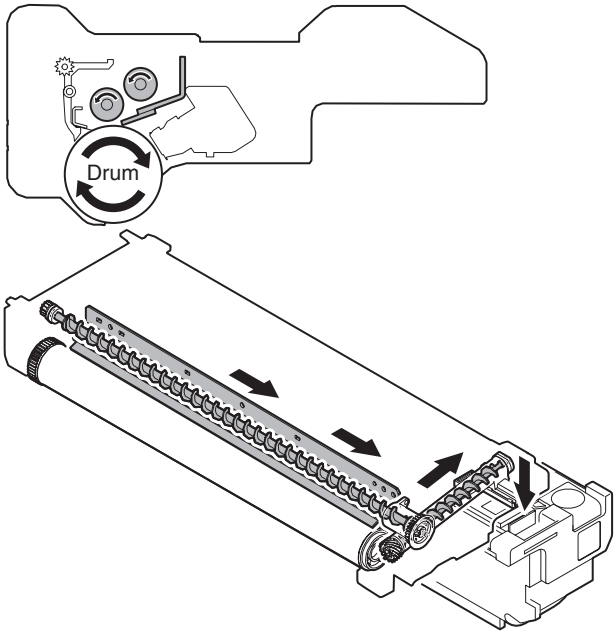

Residual toner removed from the OPC drum surface is transported to the recycle toner collection section in the toner cartridge by the waste toner transport screw.

4) All the surface of the OPC drum is discharged by laser beams.

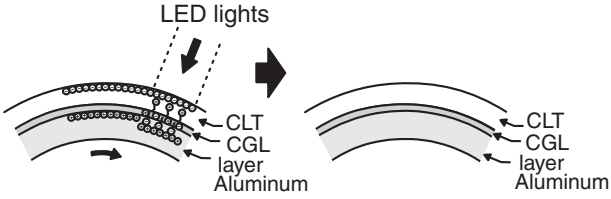

After completion of the job, laser beams are radiated onto al the surface of the OPC drum.

When laser beams are radiated onto the CGL of the OPC drum, positive and negative charges are generated.

Positive charges generated in CGL are attracted to the negative charges on the OPC drum surface. On the other hand, negative charges are attracted to positive charges in the aluminum layer of the OPC drum.

Therefore, positive and negative charges are balanced out on the OPC drum surface and in the aluminum layer, reducing positive and negative charged to decrease the surface voltage of the OPC drum.

D. Maintenance and parts replacement

(1) Maintenance list

Unit name	No.	Part name	When calling	100K	200K	300K	400K	500K	600K	700K	800K	Remark
Drum peripheral	1	Drum		×	▲	×	▲	×	▲	×	▲	Replace at 200K or 1 year.
	2	DSD collar		❍	❍	❍	❍	❍	❍	❍	❍	
	3	Cleaner blade		×	▲	×	▲	×	▲	×	▲	
	4	Toner reception seal		×	▲	×	▲	×	▲	×	▲	
	5	Side molt F		×	▲	×	▲	×	▲	×	▲	Apply side seal powder.
	6	Side molt R		×	▲	×	▲	×	▲	×	▲	Apply side seal powder.
	7	Drum separation pawl unit		×	▲	×	▲	×	▲	×	▲	
	8	MC unit	×	❍	▲	❍	▲	❍	▲	❍	▲	Includes the screen grid, the charging plate, and the MC cleaner. ❍: Charging plate cleaning by the MC cleaner

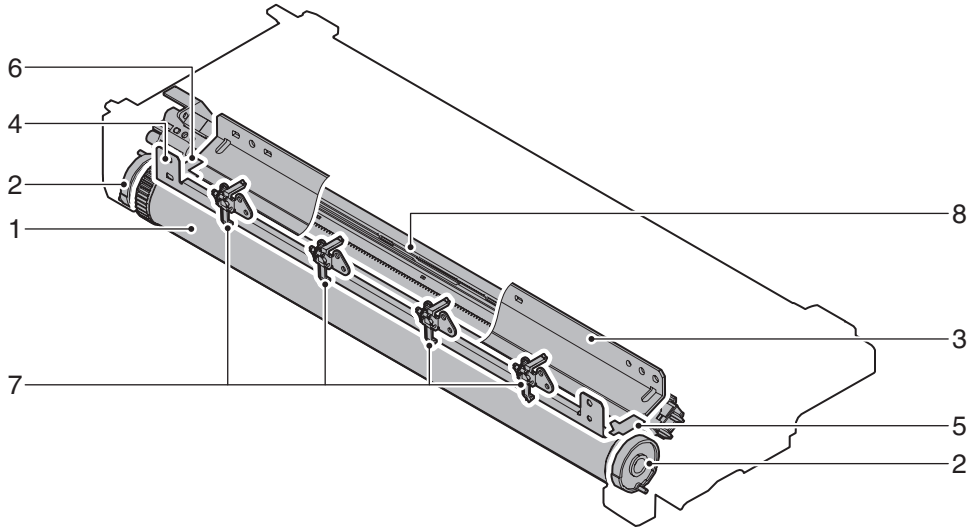

(2) Maintenance and parts replacement

No.	Unit	Parts		
a	Drum cartridge	1	MC unit	× ❍
		2	Drum	▲
		3	DSD collar	❍
		4	Drum separation pawl unit	×
		5	Toner reception seal	×
		6	Cleaner blade	×
		7	Side molt F	×
		8	Side molt R	×
b		1	Separation solenoid	

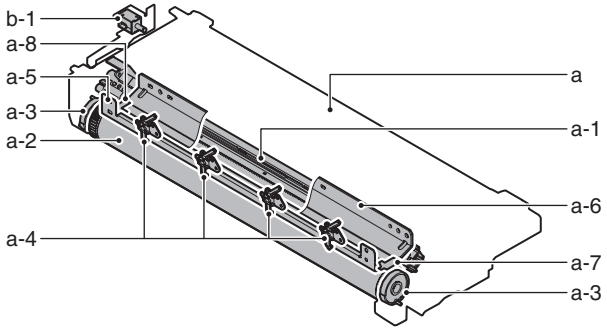

a. Drum cartridge

1) Release the lock, and pull out the left door.
2) Open the front door.

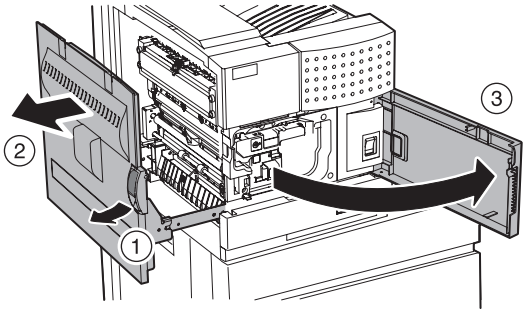

3) Put down the DV guide handle. Loosen the screw, and remove the drum cartridge.

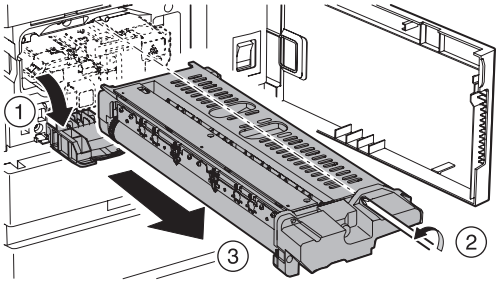

a-1. MC unit

1) Remove the drum cartridge.
2) Check to confirm that the cleaning unit is inserted fully to the bottom.
3) Remove the pawl, and remove the MC unit.

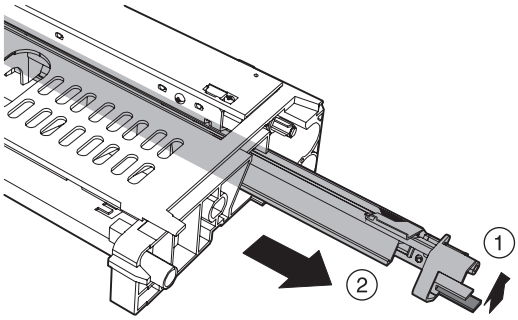

∗ For cleaning the MC unit (charging plate), reciprocate the cleaning unit back and forth 3 times or more.

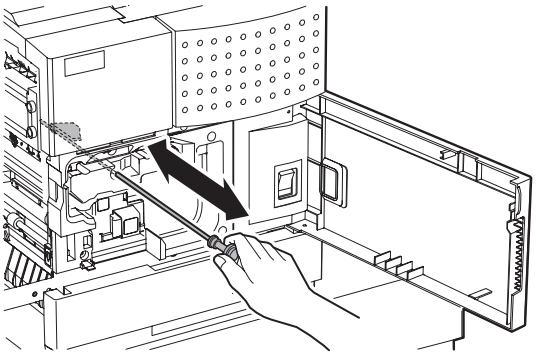

a-2. Drum

a-3. DSD collar

1) Remove the drum cartridge.
2) Loosen the screw, and remove the drum boss mounting plate.
3) Remove the drum, and remove the DSD collar.

∗ When removing the drum, place the drum cartridge as shown in the figure and remove the drum.

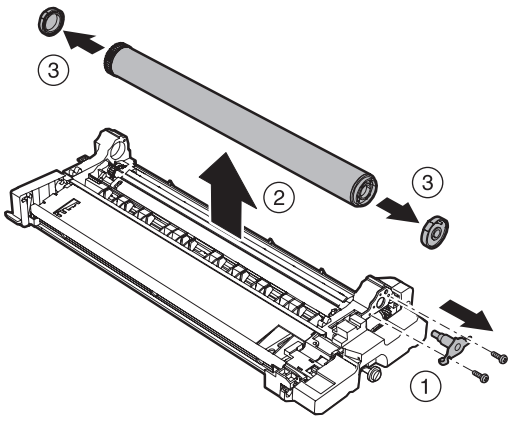

∗ When replacing the OPC drum, clear the following counters.

- Drum rotating time
- Drum counter

∗ When installing a new drum, apply starting powder.

∗ When installing, install the DSD collar R to the drum frame, then install the drum and the DSD collar F. When installing the DSD collar, engage the DSD collar boss with the drum frame hole.

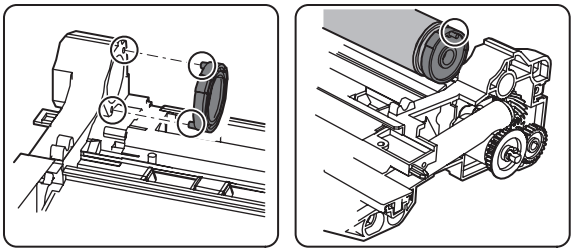

a-4. Drum separation pawl unit

1) Remove the drum cartridge.
2) Remove the screw, and remove the drum separation pawl unit.

∗ When handling the separation pawl, be careful not to break or scratch the tip of the separation pawl and keep it away from dirt.

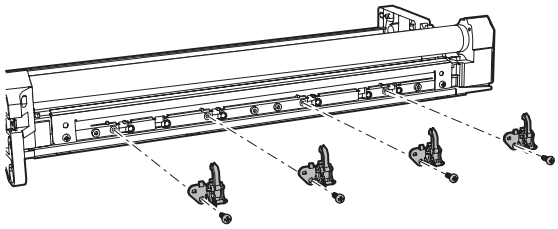

After installing the drum separation pawl unit, push the separation lever and check to confirm that the separation pawl operates normally.

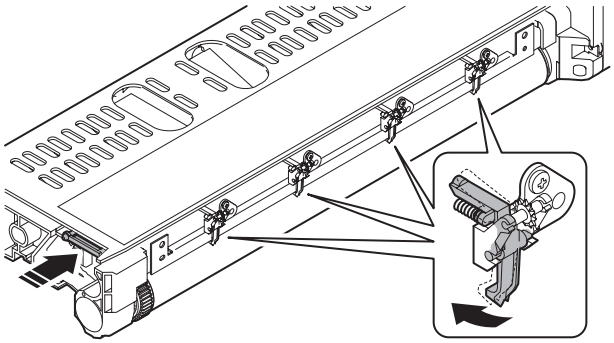

a-5. Toner reception seal

1) Remove the drum cartridge.
2) Remove the drum and the DSD collar.
3) Remove the drum separation pawl unit.
4) Remove the screw, and remove the toner reception seal.

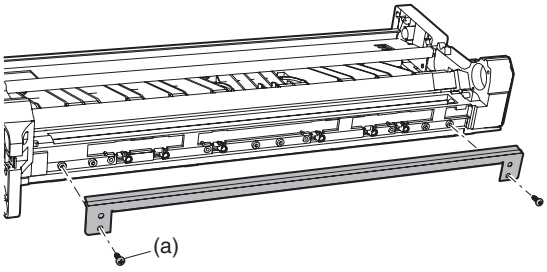

∗ When installing the toner reception seal, tighten the screw (a) on the positioning side for the first time. Check to confirm that the process earth plate and the toner reception seal are conductive. (10Ω or less)

a-6. Cleaner blade

1) Remove the drum cartridge.
2) Remove the drum and the DSD collar.
3) Pull it out until the cleaning unit stops.
4) Remove the screw, and remove the cleaner blade.

∗ When removing the drum blade, place the drum as shown in the figure and remove the drum blade to prevent toner from dispersing.

∗ Do not damage the cleaner blade. Do not touch the lead edge.

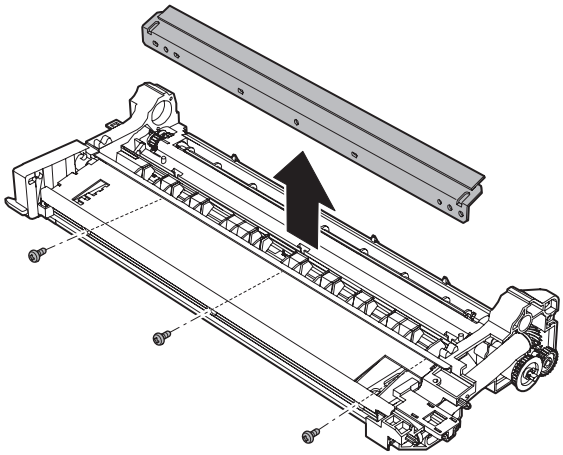

∗ When installing the cleaner blade, pull the cleaner shaft fully toward you.

∗ After installing the cleaner blade, insert the cleaner shaft fully to the bottom.

a-7. Side molt F

a-8. Side molt R

1) Remove the drum cartridge.
2) Remove the drum and the DSD collar.
3) Remove the toner reception seal.
4) Remove the cleaner blade.
5) Remove the side molt F and R.

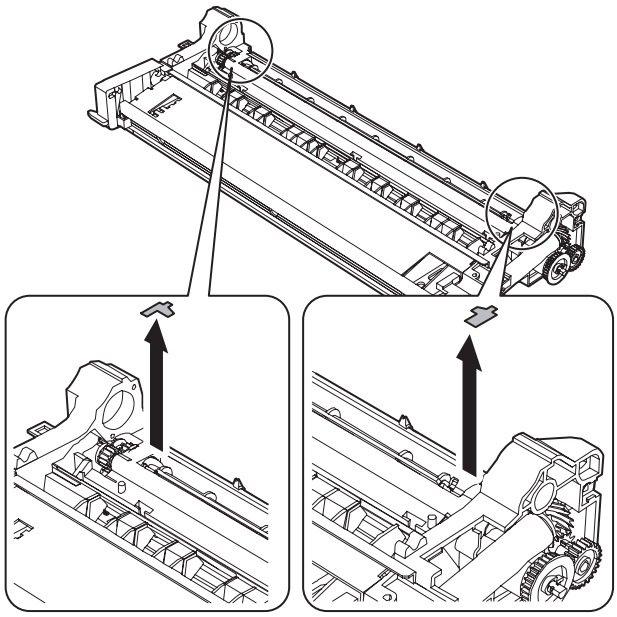

∗ When attaching the side molts F/R, attach them to the attachment reference as shown.

∗ After attaching the side molt F/R, push the both ends of the blade with your fingers to check to confirm that the red moquette moves smoothly.

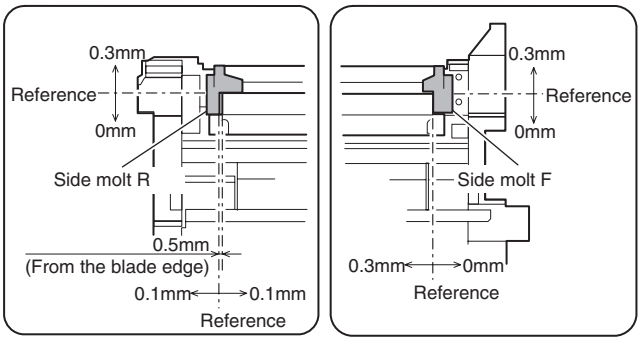

Put side seal powder (1g) on the moquettes F/R and spread side seal powder all over the moquettes surfaces.

Side seal powder: UKOG-0309FCZZ

∗ Do not apply powder excessively to the ambient parts.

∗ Be careful not to damage the cleaning blade and the side blade.

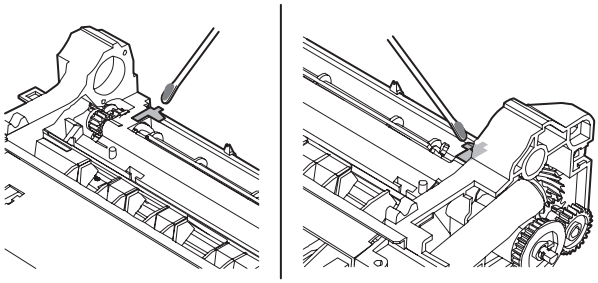

b-1. Separation solenoid

1) Remove the screw, and remove the rear cabinet.

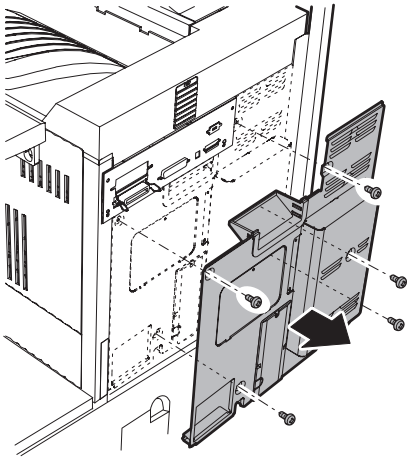

2) Remove the connector and the screw, and remove the PCU PWB unit.

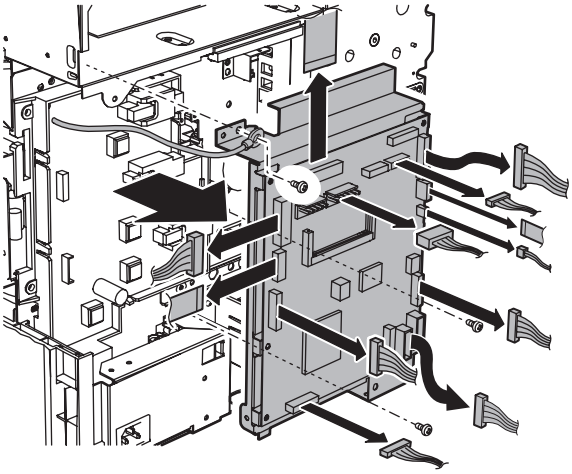

3) Remove the screw and the connector, and remove the separation solenoid unit.

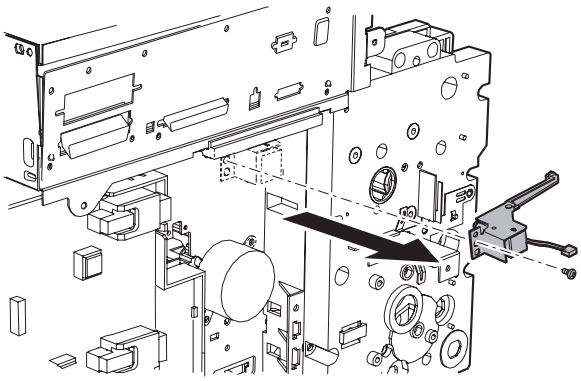

4) Remove the E-ring and the screw, and remove the separation solenoid.

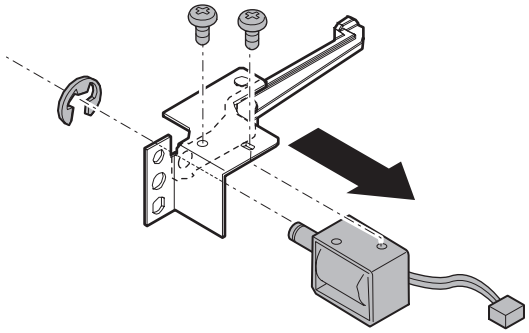

[Transfer section]

A. General

In this section, toner images on the OPC drum are transferred to paper.

B. Major parts and signal functions

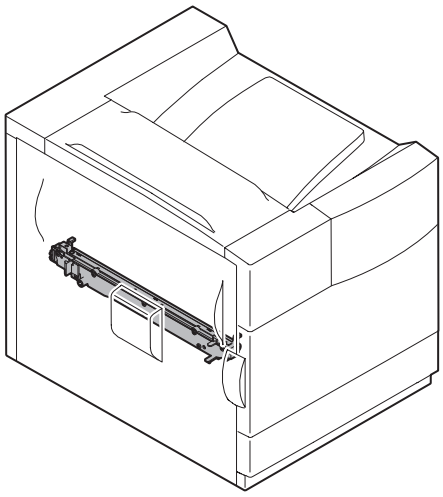

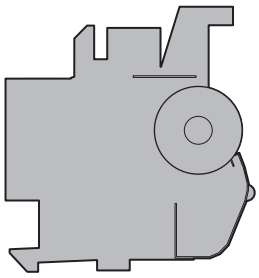

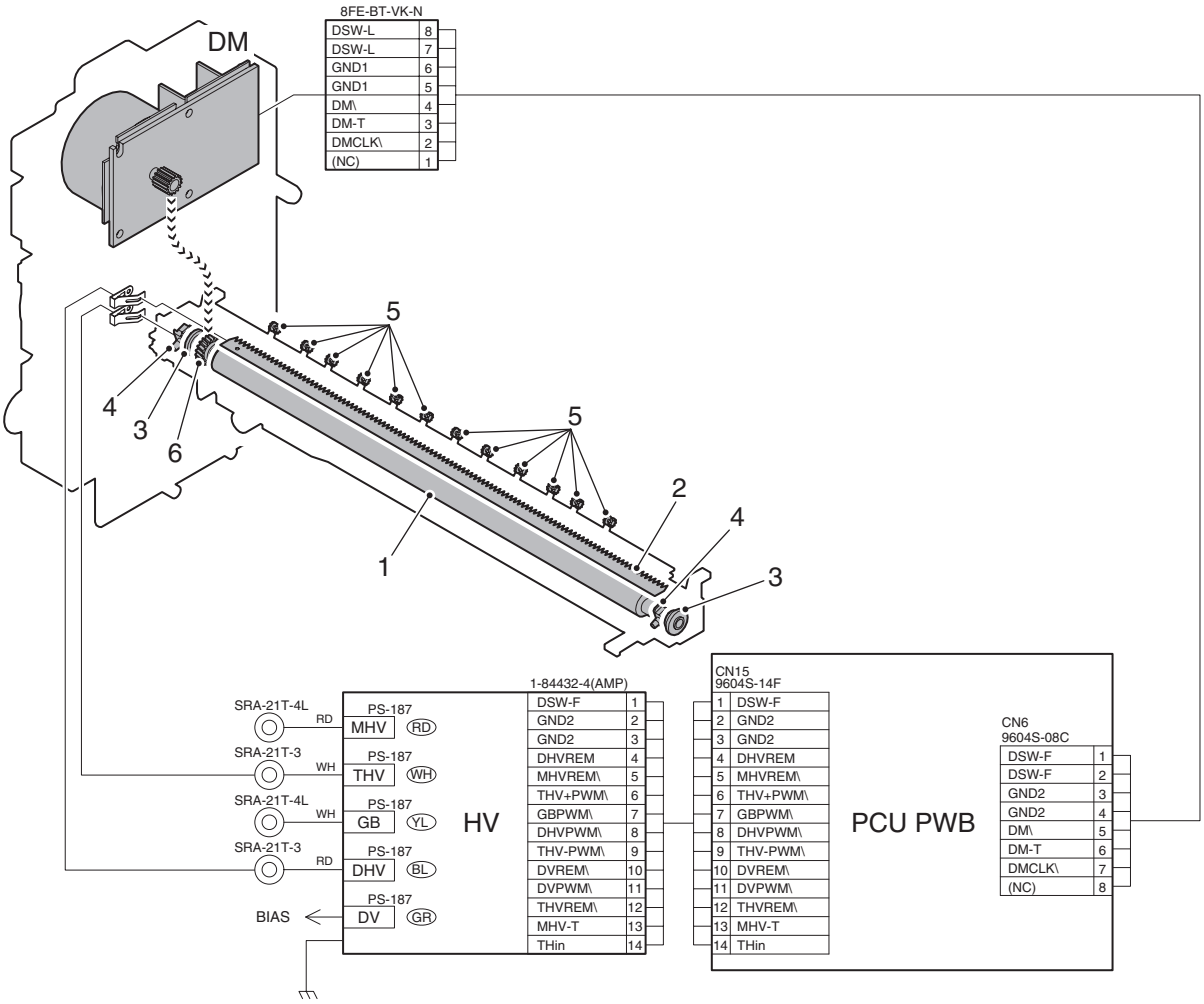

Code	Signal name	Name	Function/Operation	Type	Note
DM	DM	OPC drum motor	Drives the OPC drum and the transfer section.	DC brushless motor	
THV	THV	Transfer high voltage	High voltage for transfer		
DHV	DHV	High separation voltage	High voltage for separation of paper		

No.	Name	Function
1	Transfer roller	Transfers toner images from the OPC drum surface to paper.
2	Discharge plate (Separation electrode)	Separates paper from the drum.
3	TR bearing (F/R)	Transfer roller bearing
4	Transfer roller collar	Transfer roller collar
5	After-transfer star ring	Guides paper after transfer.
6	TR gear	Transfer roller drive gear

C. Operational descriptions

1) Toner image transfer

Toner images formed on the drum by the developing roller are transferred to paper by the transfer roller.

Toner on the drum is negatively charged by stirring in the developing unit. By applying a positive voltage to the transfer roller, the transfer roller and paper on the transfer roller are positively charged to transfer negatively charged toner images to paper.

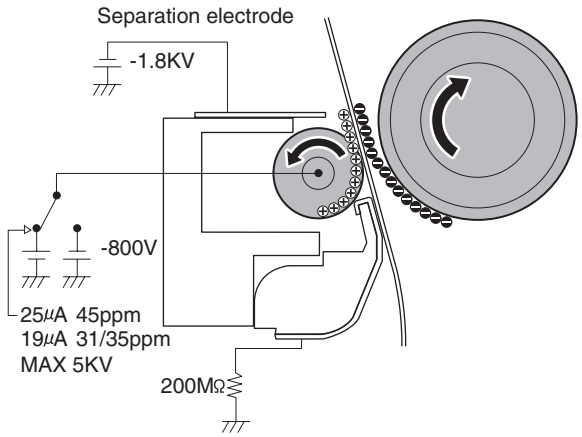

Separation operation

Since paper with toner images transferred on it is positively charged, a high negative voltage is applied to the separation electrode to separate the paper from the drum.

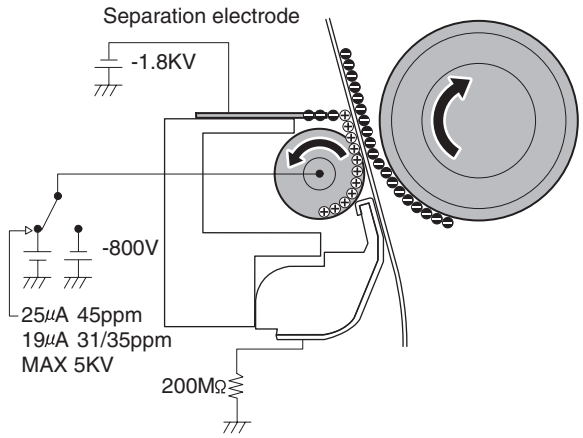

2) Transfer roller cleaning

After completion of the job, the applied voltage to the transfer roller is switched to negative in order to attract toner from the transfer roller to the OPC drum, cleaning the drum with the cleaning blade.

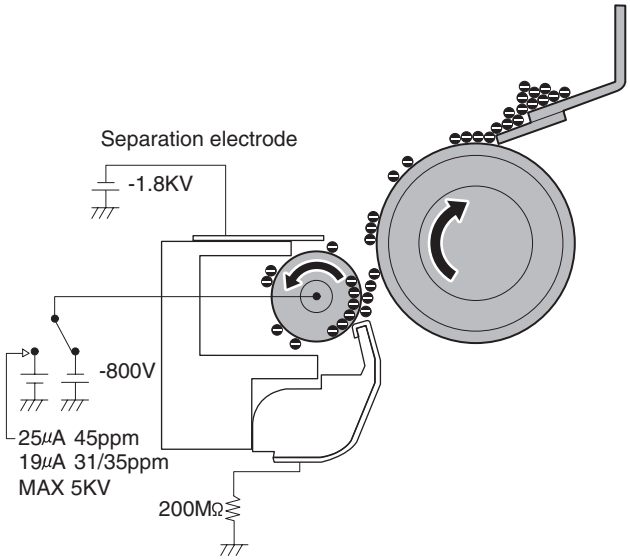

The transfer cleaning voltage and the developing positive bias are applied to the OPC drum at the timing shown below so that remaining toner on the transfer roller is attracted again to the OPC drum, performing cleaning.

1) When the power is turned on:

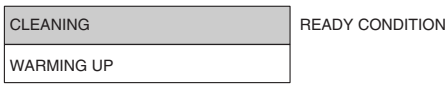

∗ However, the cleaning voltage is not applied during warm up after completion of SIM.

2) After completion of a print job

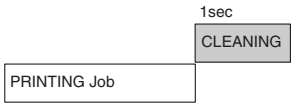

3) After printing 100 sheets (during 1 job)

D. Maintenance and parts replacement

(1) Maintenance list

Unit name	No.	Part name	When calling	100K	200K	300K	400K	500K	600K	700K	800K	Remark
Transfer	1	Transfer roller	×	×	▲	×	▲	×	▲	×	▲	
	2	Discharge plate	×	×	▲	×	▲	×	▲	×	▲	
	3	TR bearing (F/R)		×	×	×	▲	×	×	×	▲	
	4	Transfer roller collar		×	×	×	▲	×	×	×	▲	
	5	After-transfer star ring		×	×	×	×	×	×	×	×	
	6	TR gear	×	×	▲	×	▲	×	▲	×	▲	

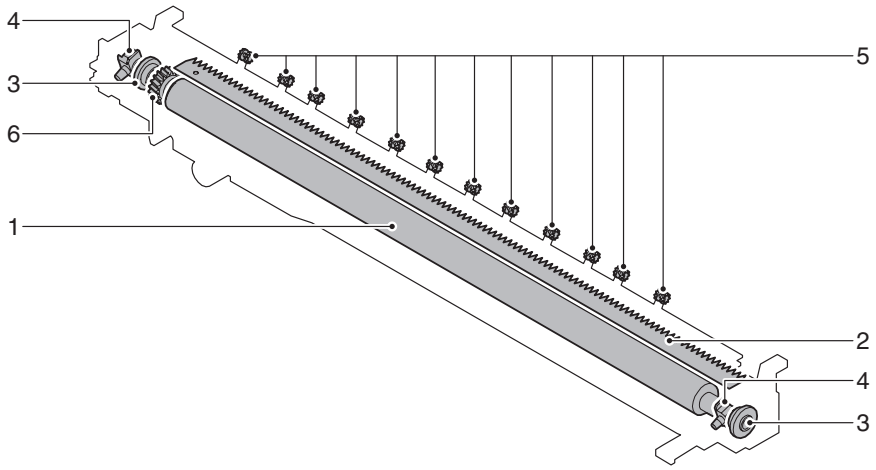

(2) Maintenance and parts replacement

No.	Unit	Parts		
a	Transfer roller unit	1	After-transfer star ring	×
		2	Discharge plate	×
		3	Transfer roller	×
		4	Transfer roller collar	×
		5	TR bearing (F/R)	×
		6	TR gear	×

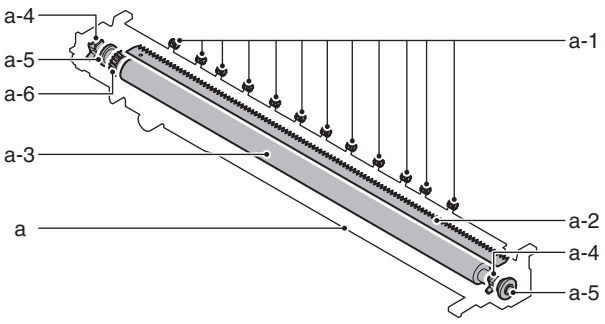

a. Transfer roller unit

1) Pull out the left door.

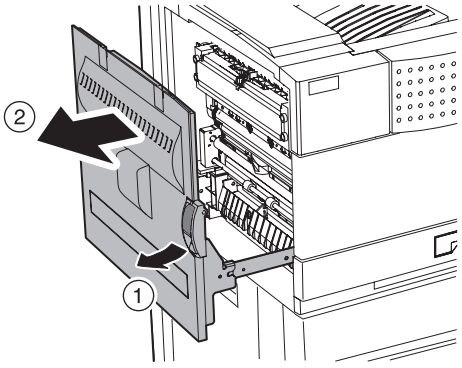

2) Remove the transfer lock pawl, and pull out the transfer roller unit.

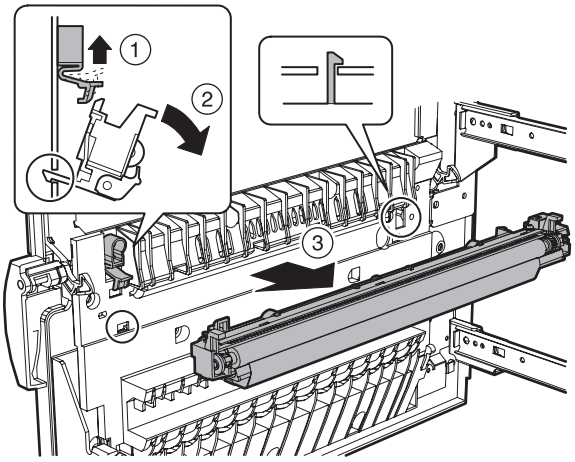

a-1. After-transfer star ring

1) Remove the transfer roller unit.
2) Remove the transfer rear star ring.

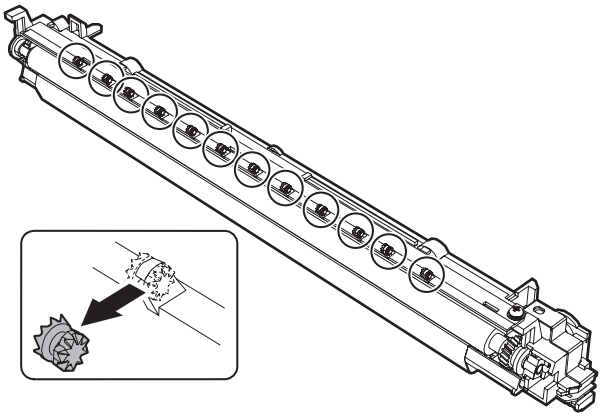

a-2. Discharge plate

1) Remove the transfer roller unit.
2) Remove the screw, and remove the discharge plate holder and the discharge plate.

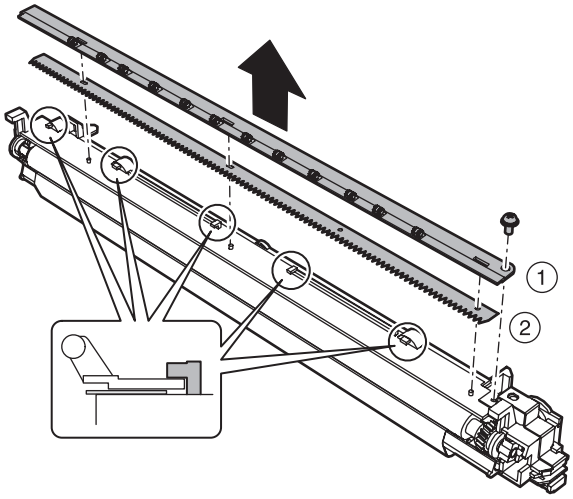

a-3. Transfer roller

a-4. Transfer roller collar

a-5. TR bearing (F/R)

a-6. TR gear

1) Remove the transfer roller unit.
2) Remove the screw, and remove the discharge plate holder and the discharge plate.

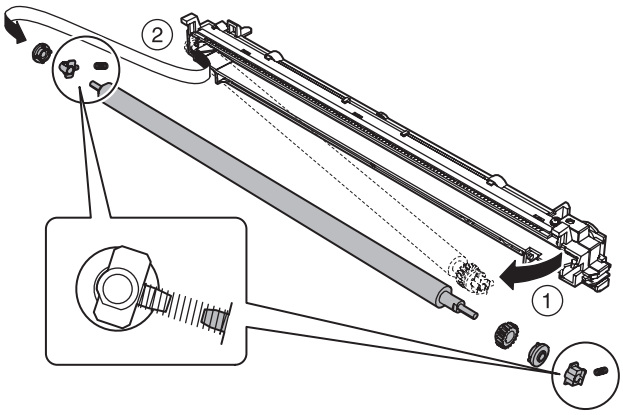

[Developing section]

A. General

In this section, toner is attached to electrostatic latent images formed by laser beams on the OPC drum, making visible images.

B. Major parts and signal functions

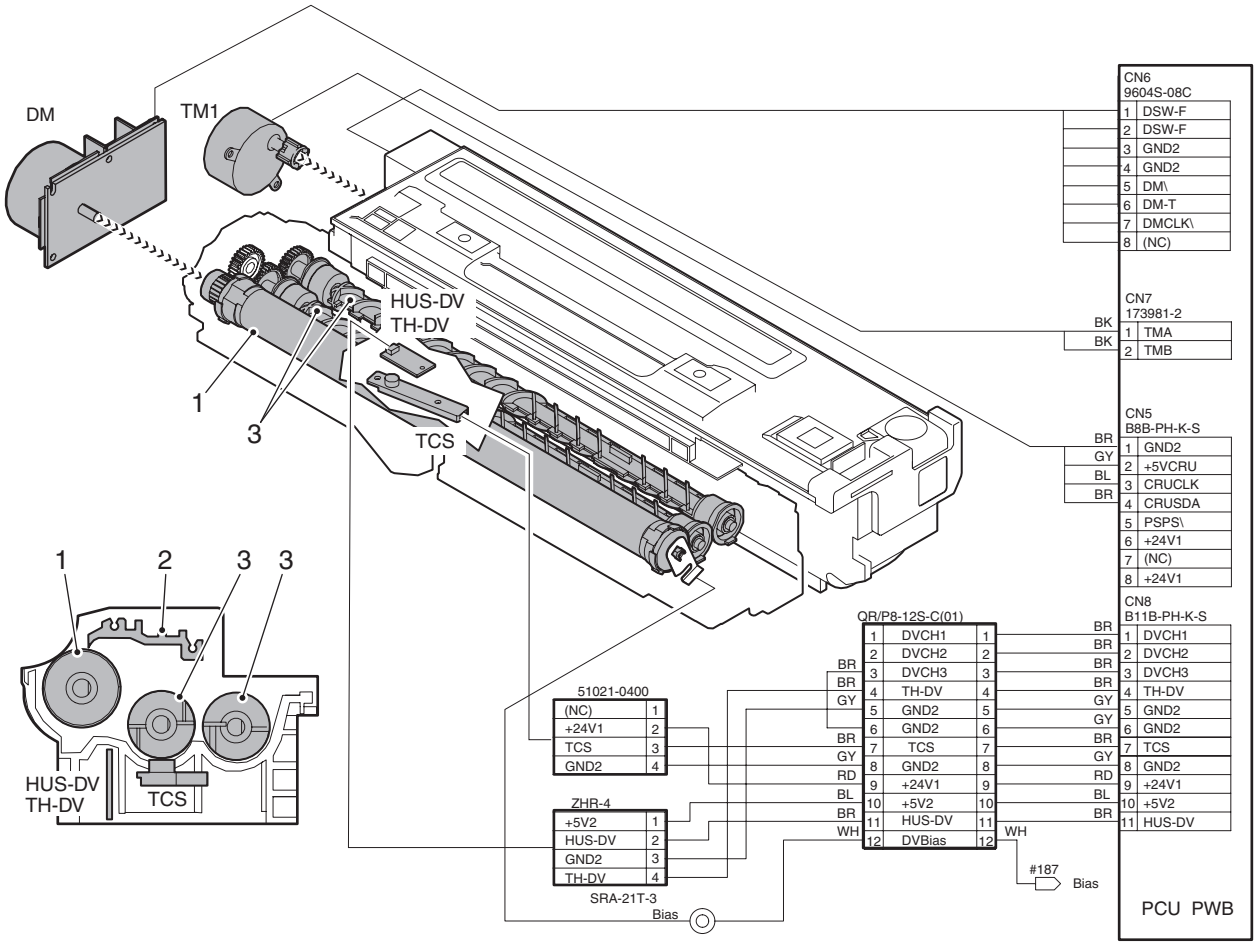

Code	Signal name	Name	Function/Operation	Type	Note
HUS-DV	HUS-DV	Developing humidity sensor	Developing section peripheral humidity detection	Humidity sensor	Analog detector
TH-DV	TH-DV	Developing temperature thermistor	Temperature detection around the developing unit	Thermistor	Analog
TCS	TCS	Toner density sensor	Toner density detection	Magnetic sensor	Analog detector
DM	DM	Drum motor	Drives the drum/developing section.	DC brushless motor	
TM1	TM	Toner motor	Drives the toner hopper.	Synchronous motor	
Bias	Bias	Developing bias	High voltage for developing bias		

No.	Name	Operation
1	Developing roller	Forms magnetic brush with developer and put toner on the OPC drum.
2	DV doctor	Keeps the height of the magnetic brush on the developing roller at a fixed level.
3	Mixing roller (MX roller)	Mixes developer (carrier and toner) and charges toner negatively.

C. Operational descriptions

Electrostatic latent images formed on the OPC drum by the LED (writing) unit (LED image light) are converted into visible images by toner.

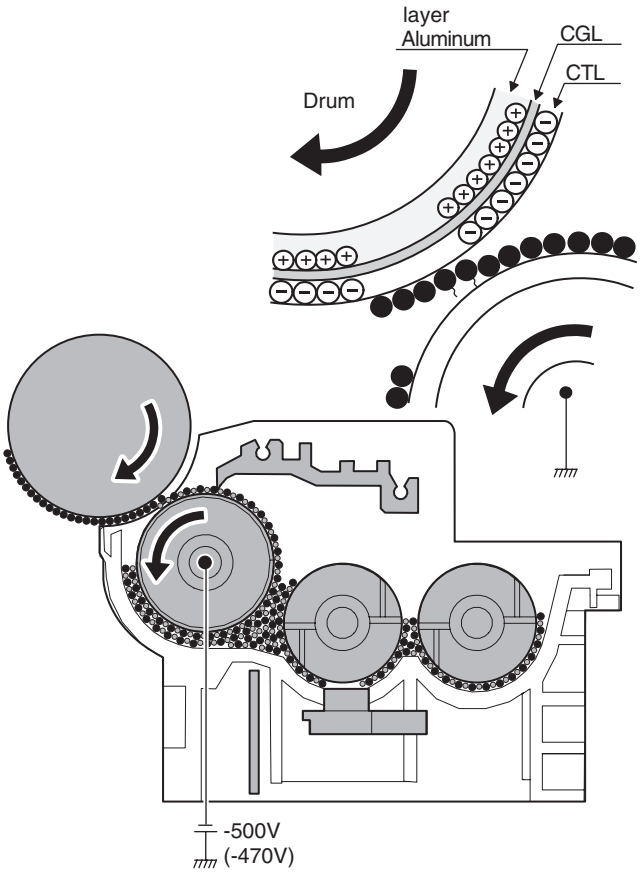

Toner in the developing unit is stirred by the mixing roller.

When toner is stirred, it is negatively charged by mechanical friction.

The developing bias voltage (negative) is applied to the developing roller.

Negatively charged toner is attracted and attached to the area on the OPC drum where negative voltage is reduced by exposure.

On the other hand, the negative voltage at an area where exposure is not made is higher than the developing bias voltage, and toner is not attached.

D. Maintenance and parts replacement

(1) Maintenance list

Unit name	No.	Part name	When calling	100K	200K	300K	400K	500K	600K	700K	800K	Remark
Developing section	1	Developer		▲	▲	▲	▲	▲	▲	▲	▲	Supplied when installing
	2	DV blade		×	▲	×	▲	×	▲	×	▲	
	3	DV side seal F		×	▲	×	▲	×	▲	×	▲	
	4	DV side seal R		×	▲	×	▲	×	▲	×	▲	
	5	Toner cartridge										Attached when installing./ 750g, user replacement for every 35K.

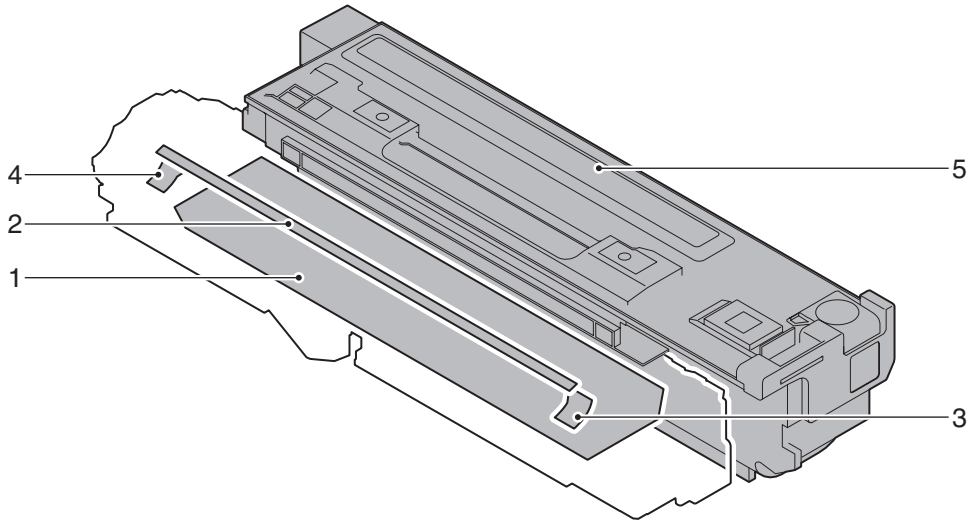

(2) Maintenance and parts replacement

No.	Unit	Parts		
a	DV cartridge	1	Developer	▲
		2	DV blade	×
		3	DV side seal F	×
		4	DV side seal R	×
		5	Toner density sensor	
		6	Temperature/humidity sensor	
b		1	Toner cartridge	
		2	Toner motor	

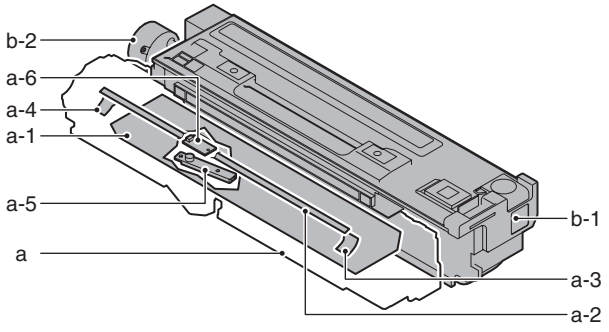

a. DV cartridge

1) Release the lock, and pull out the left door.
2) Open the front door.

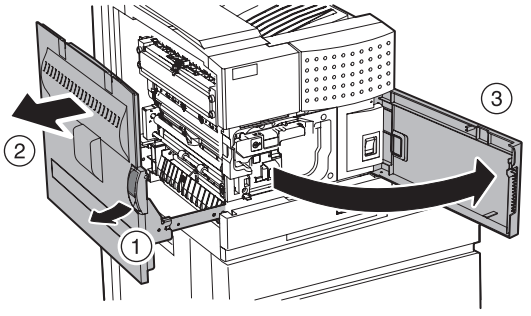

3) Put down the DV guide handle, release the lock, and remove the DV cartridge.

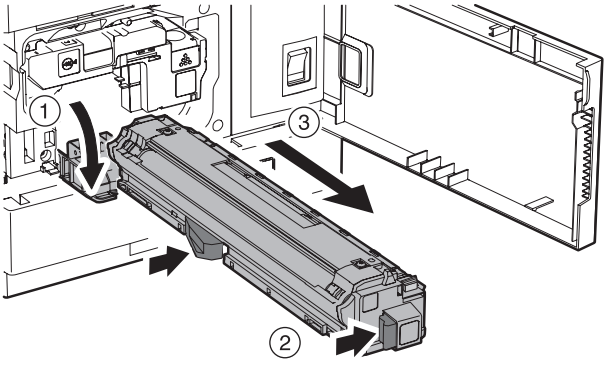

a-1. Developer

1) Remove the DV cartridge.
2) Remove the screw, and remove the DV cover.

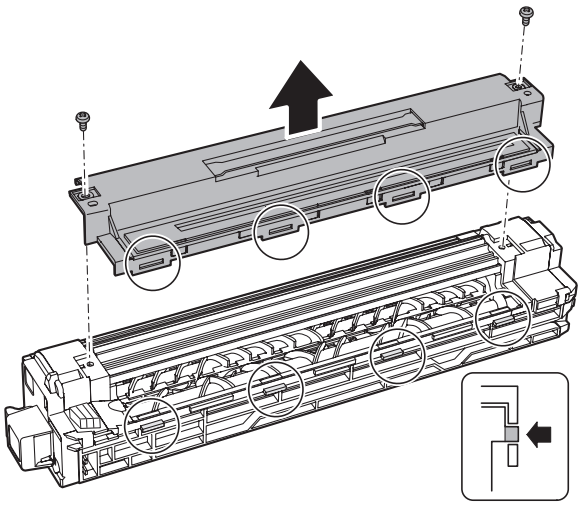

3) Remove old developer.

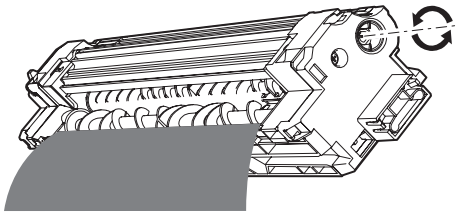

∗ Use a metal scale or a minus screwdriver for easy operation.

4) Supply new developer.

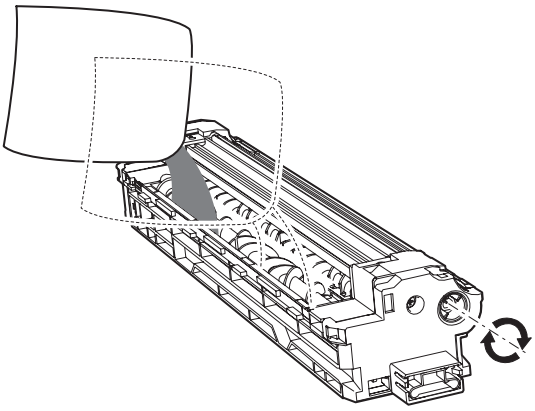

a-2. DV blade

1) Remove the DV cartridge.
2) Remove the DV blade.

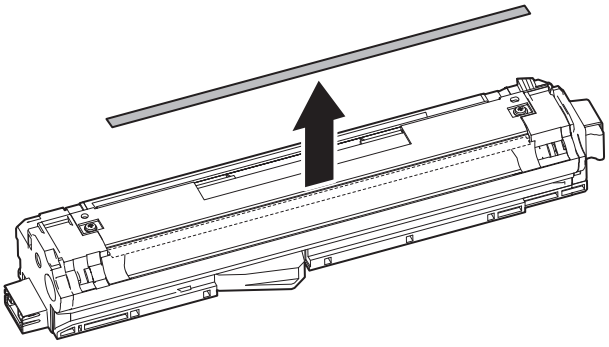

∗ When attaching the DV blade, attach to the attachment reference shown in the figure below.

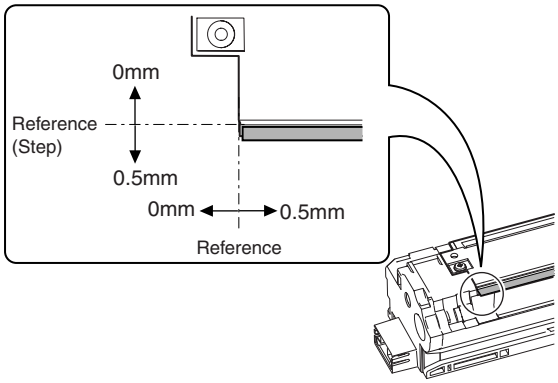

a-3. DV side seal F

a-4. DV side seal R

1) Remove the DV cartridge.
2) Remove the DV side seal F and the DV side seal R.

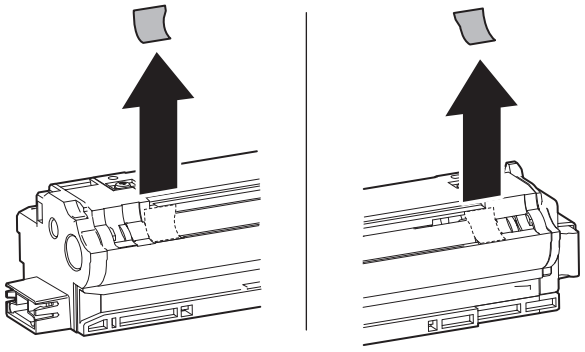

∗ When attaching the SV side seals F and R, attach them to the attachment reference shown in the figure below.

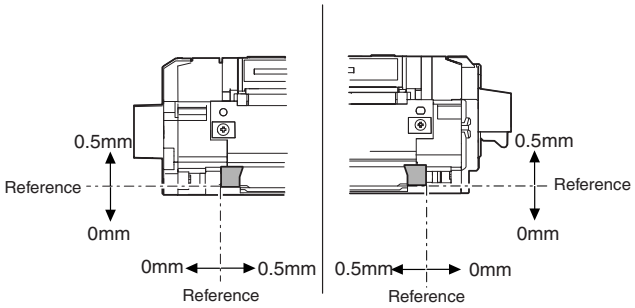

a-5. Toner density sensor

a-6. Humidity sensor

1) Remove the DV cartridge.
2) Remove the bottom cover.

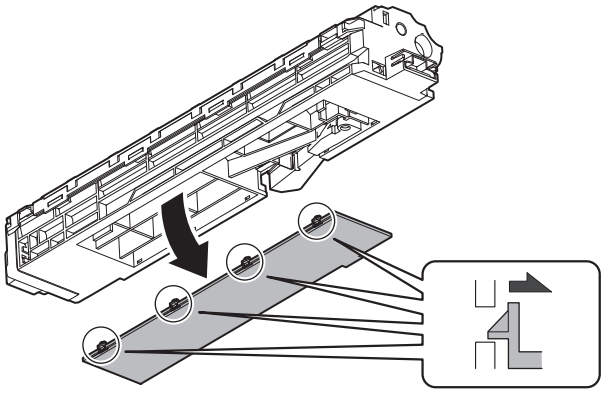

3) Remove the bottom cover.
4) Remove the screw and the connector, and remove the humidity sensor.

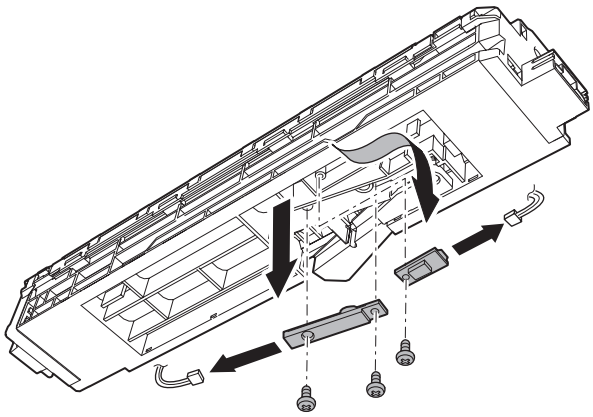

a-7. Toner cartridge

1) Open the left door and the front door.
2) Release the lock and remove the toner cartridge.

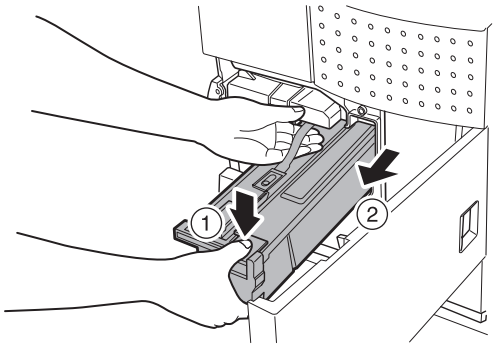

a-8. Toner motor

1) Remove the toner cartridge.
2) Remove the screw, and remove the rear cabinet.

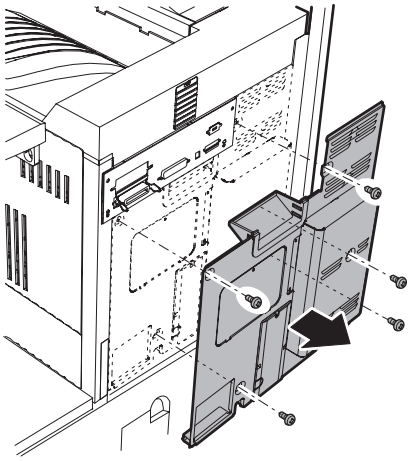

2) Remove the connector and the screw, and remove the PCU PWB unit.

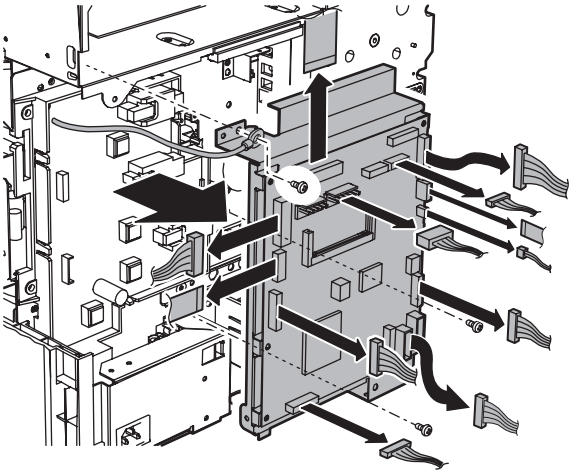

3) Remove the connector and the screw, and remove the toner motor unit.

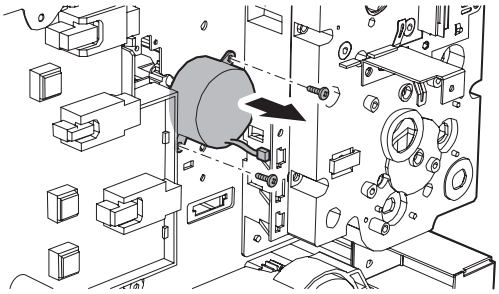

4) Remove the coupling and the spring from the toner motor.

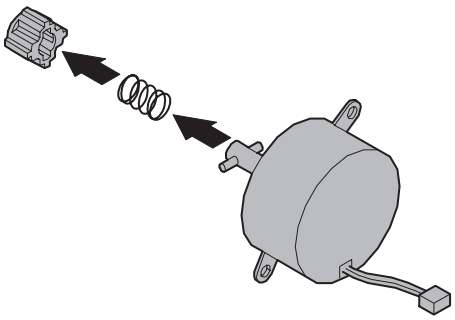

2. Fusing section

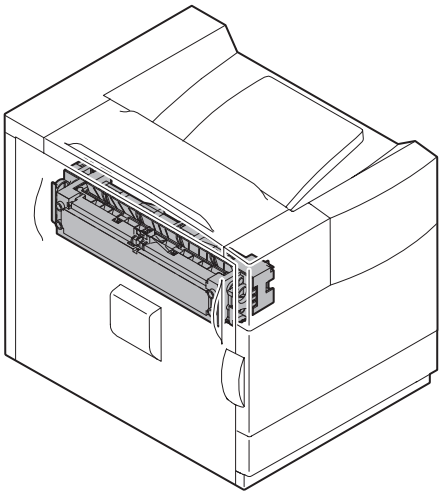

A. General

This section fused toner (which is transferred onto paper in the transfer section) onto paper by heat and pressure of the fusing roller.

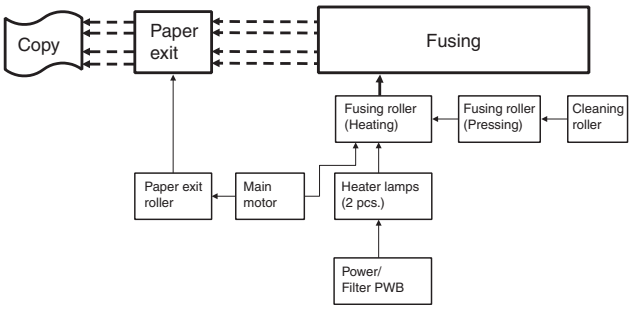

B. Major parts and signal functions

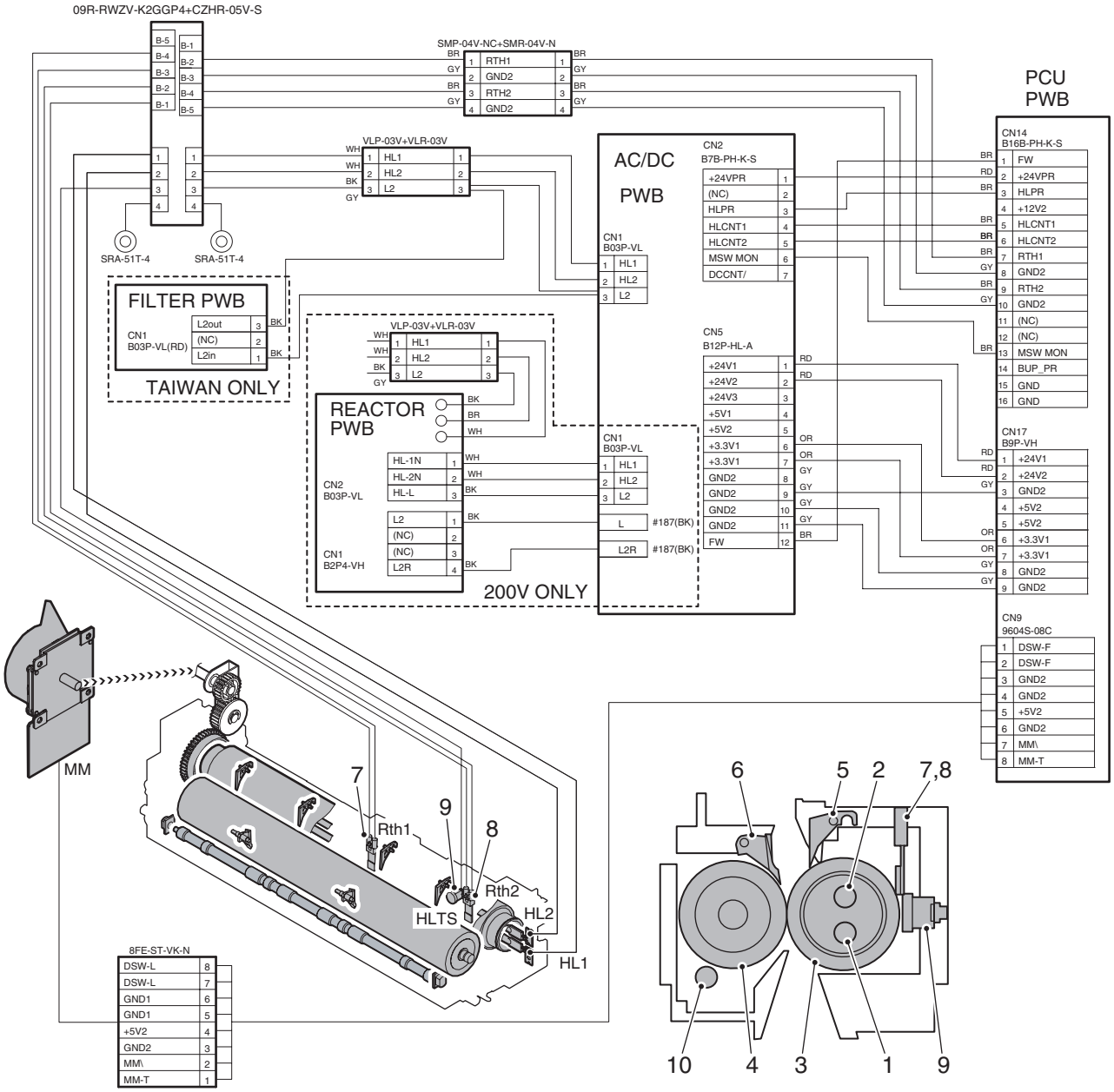

Code	Signal name	Name	Type	Function/Operation	Active condition	Note
RTH1	RTH1	Fusing temperature sensor (1)	Thermistor	Detects the surface temperature of the fusing roller (heating). (Center section)	Analog input	
RTH2	RTH2	Fusing temperature sensor (2)	Thermistor	Detects the surface temperature of the fusing roller (heating). (Edge section)	Analog input	
HLTS	HLTS	Thermostat (1)		Shuts conduction to the heater lamp when the temperature rises abnormally. [For the fusing roller (heating)]		
HL1	HL1	Heater lamp (1)		Heats the fusing roller (heating).		
HL2	HL2	Heater lamp (2)		Heats the fusing roller (heating).		
MM	MM	Main motor		Drives the fusing unit.		

1	Heater lamp 1	Generates heat and transmits heat to the heat roller. The temperature is controlled by the thermistor. (Temperature control is made mainly on the center.)
2	Heater lamp 2	Generates heat and transmits heat to the heat roller. The temperature is controlled by the thermistor. (Temperature control is made mainly on both sides.)
3	Upper heat roller	Transmits heat to melt toner on paper and fuse toner by means of a pressure with the lower heat roller.
4	Lower heat roller	Fuses toner on paper by means of a pressure with the upper heat roller. To improve fusing capability, the diameter is greater than the conventional ones. (ø30mm→ø40mm)
5	Fusing upper separation pawl	Prevents winding of paper around the upper heat roller.
6	Fusing lower separation pawl	Prevents winding of paper around the lower heat roller.
7	Thermistor (Center)	Detects the surface temperature of the upper heat roller. (On/off of heater lamp 1 is controlled according to the detected temperature.)
8	Thermistor (Side)	Detects the surface temperature of the upper heat roller. (On/off of heater lamp 2 is controlled according to the detected temperature.)
9	Thermostat	When an abnormal temperature of the upper heat roller is detected, the heater lamp power is interrupted. To supply power again, press the switch on the top.
10	Cleaning roller	Cleans toner on the lower heat roller. The blast process is employed.

C. Operational descriptions

(1) Fusing unit drive

To drive the fusing unit, the drive power is transmitted from the drive motor (MM) through the connection gear to the upper heat roller gear.

The drive motor DC brushless motor is driven according to the control signal sent from the PCU.

(2) Heater lamp drive

The surface temperature of the heat roller detected by the thermistor is sent to the PCU.

When the temperature is lower than the specified level, the heater lamp lighting signal is sent from the PCU to the heater lamp drive circuit in the sub power PWB.

The power triac in the heater lamp drive circuit is turned on, and the AC power is supplied to the heater lamp, lighting the lamp and heating the heat roller.

To prepare for an abnormally high temperature of the heat roller, the thermostat is provided for safety.

When the thermostat is opened, power supply (AC line) to the heater lamp is cut off.

(3) Fusing operation

Toner on paper is heated and pressed to be fused by the heat roller.

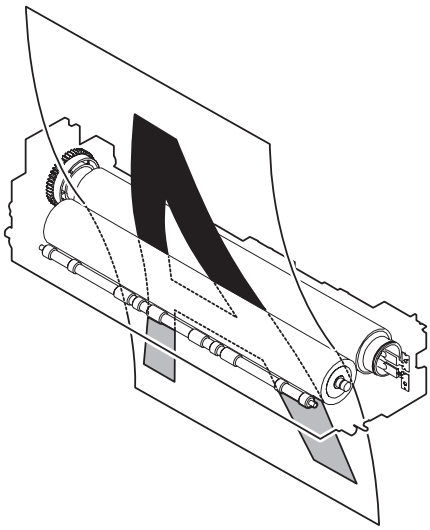

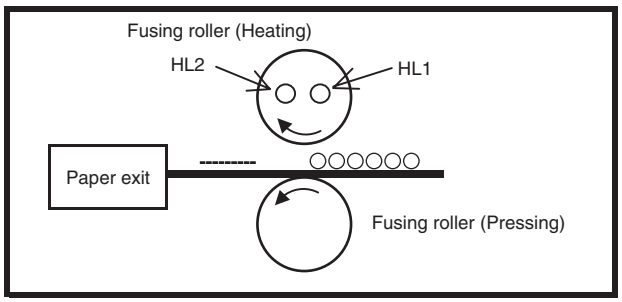

The fusing heat roller (heating) is provided with two heater lamps, which heat the fusing roller to fuse toner onto paper.

The fusing rollers (pressing) are of silicon rubber because of the following reasons and purpose.

1) Paper is separated upward. (Since the fusing roller (heating) is of higher hardness, the fusing roller (pressing) is deformed to separate paper upward.)
2) The nip quantity is increased to increase heat capacity for paper.
3) By pressing paper with the flexible roller, toner is fused without deformation.

(4) Fusing temperature control

The temperature sensor is provided at the center of the fusing roller (heating).

The roller temperature is detected by the installed temperature sensor, and the heater lamp is controlled so that the temperature is maintained at the specified level.

In addition, the fusing temperature is switched according to the kind of paper.

Mode		Fusing roller	
		AR-M351U/ M355U	AR-M451U/ M455U
Ready condition print mode	Plain paper	190°C	190°C
	Heavy Paper	190°C	190°C
	Postcard	190°C	190°C
	Envelope	190°C	190°C
Pre-heat		150°C	150°C

(5) Cleaning roller

The fusing section cleaning roller of this machine is made of the blast process.

1) Remaining toner attaches to the upper heat roller.
2) Due to coating and the temperature characteristics of the upper heat roller, toner is not attached to the upper heat roller but to the lower heat roller.
3) Remaining toner on the lower heat roller is further attached to the cleaning roller due to the temperature characteristics and the difference in roughness of surfaces of the rollers.
4) Remaining toner attached to the cleaning roller is accumulated until the roller is replaced.

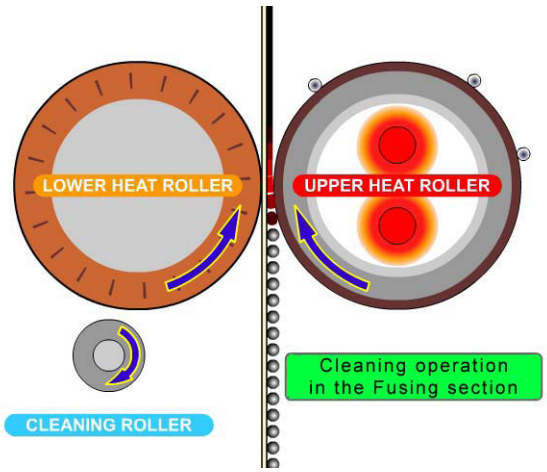

D. Maintenance and parts replacement

(1) Maintenance list

Unit name	No.	Part name	When calling	100K	200K	300K	400K	500K	600K	700K	800K	Remark
Fusing section	1	Upper heat roller	×	×	▲	×	▲	×	▲	×	▲	
	2	Lower heat roller	×	×	▲	×	▲	×	▲	×	▲	
	3	Upper separation pawl	❍	❍	▲	❍	▲	❍	▲	❍	▲	
	4	Lower separation pawl	❍	❍	▲	❍	▲	❍	▲	❍	▲	
	5	Thermistor	×	×	×	×	×	×	×	×	×	Clean and remove paper dust.
	6	Upper heat roller gear		×	▲	×	▲	×	▲	×	▲	
	7	CL roller	×	×	▲	×	▲	×	▲	×	▲	
	8	CL roller bearing	×	×	▲	×	▲	×	▲	×	▲	
	9	Paper guides	❍	❍	❍	❍	❍	❍	❍	❍	❍	
	10	Gears		☆	☆	☆	☆	☆	☆	☆	☆	

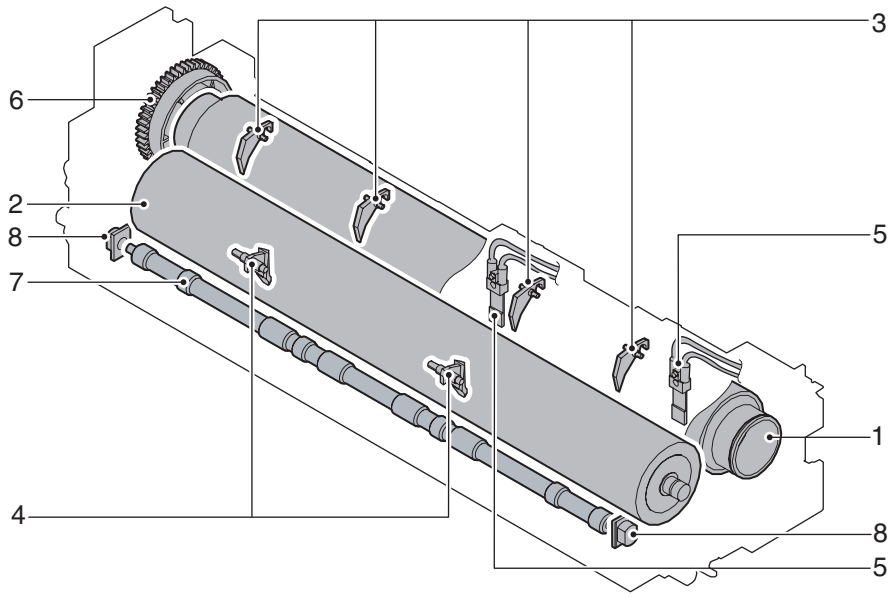

(2) Maintenance and parts replacement

No.	Unit	Parts		
a	Fusing unit	1	Lower separation pawl	❍
		2	Upper separation pawl	❍
		3	Thermistor	×
		4	Lower heat roller	×
		5	CL roller	×
		6	CL roller bearing	×
		7	Heater lamp	
		8	Upper heat roller	×
		9	Upper heat roller gear	×
		10	Thermostat	

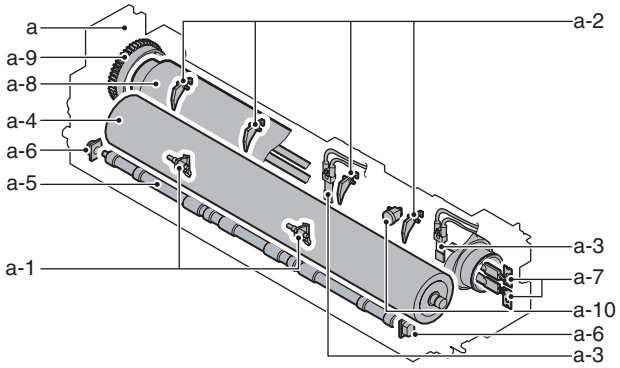

a. Fusing unit

1) Pull out the left door.

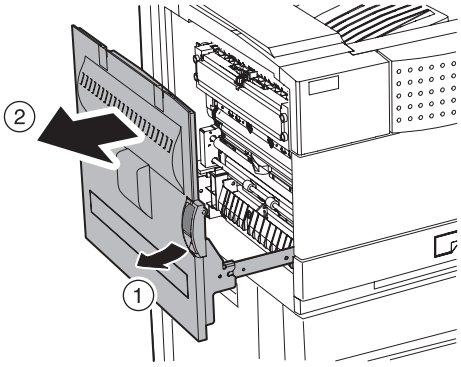

2) Remove the stopper R.

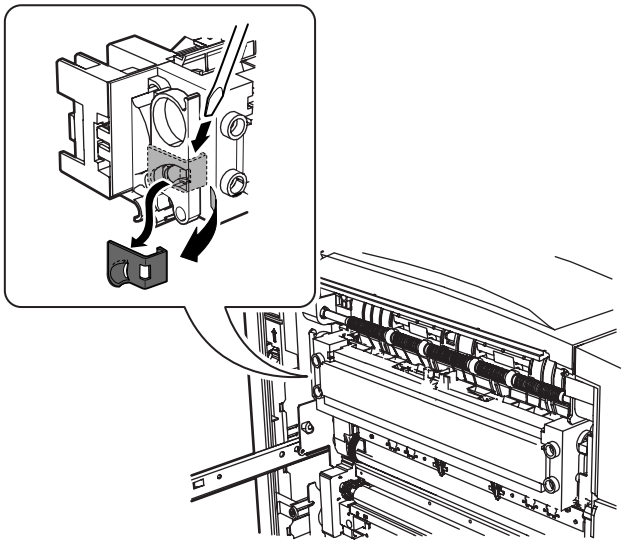

3) Pull the fusing lever, and remove the fusing unit.

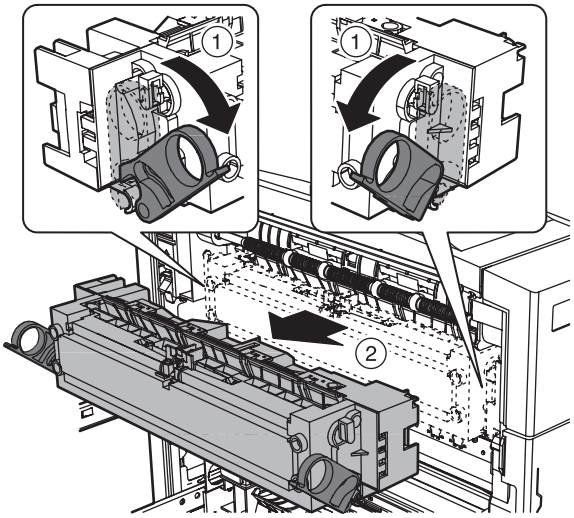

a-1. Lower separation pawl

1) Remove the fusing unit.
2) Open the fusing rear lower PG, and remove the lower separation pawl.

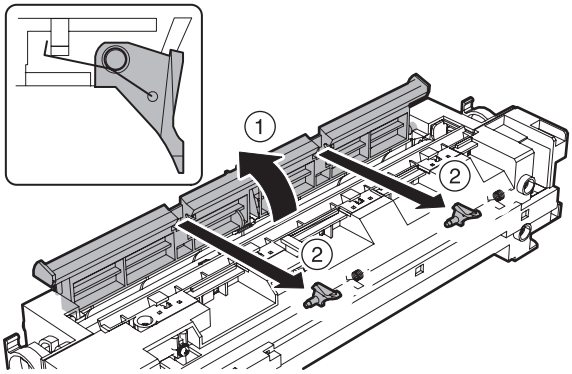

a-2. Upper separation pawl

1) Remove the fusing unit.
2) Remove the rear upper PG, and remove the upper separation pawl.

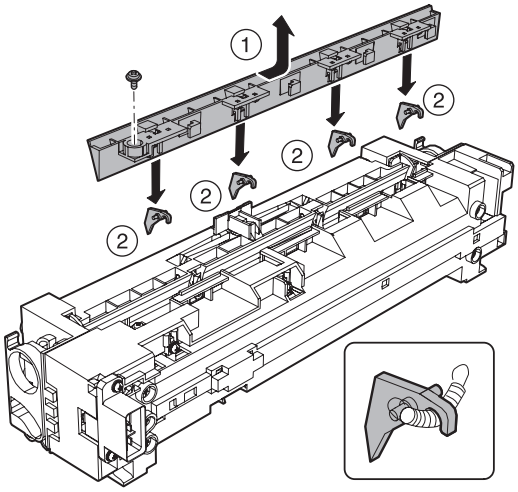

a-3. Thermistor

1) Remove the fusing unit.
2) Remove the screw, and remove the fusing drawer. Remove the connector.
3) Remove the screw, and remove the thermistor.

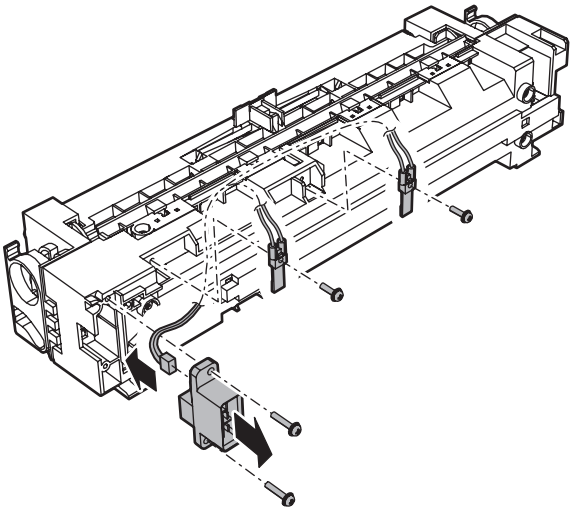

a-4. Lower heat roller

1) Remove the fusing unit.
2) Release pressure with the pressure adjustment lever.
3) Remove the screw, and open the fusing unit.

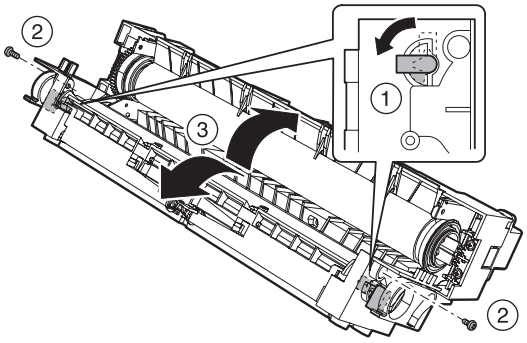

4) Open the fusing rear lower PG.
5) Remove the lower heat roller, and remove the lower heat roller bearing.

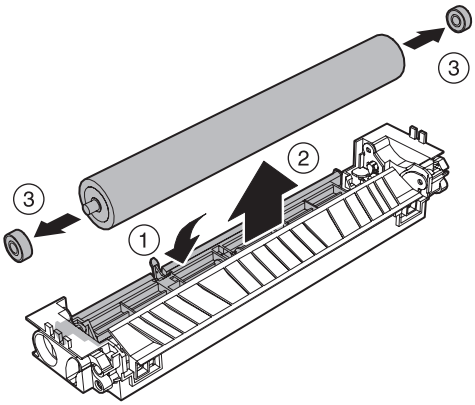

a-5. CL roller

a-6. CL roller bearing

1) Remove the fusing unit.
2) Remove the lower heat roller.
3) Remove the CL roller, and remove the CL roller bearing.

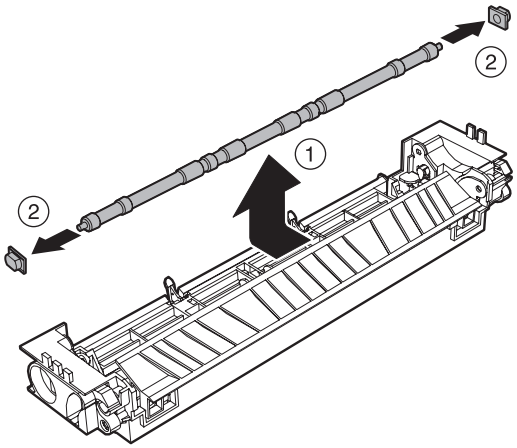

a-7. Heater lamp

1) Remove the fusing unit.
2) Open the fusing unit.
3) Remove the screw, and remove the heater lamp.

∗ Be careful not to mistake the installing position of the heater lamp.

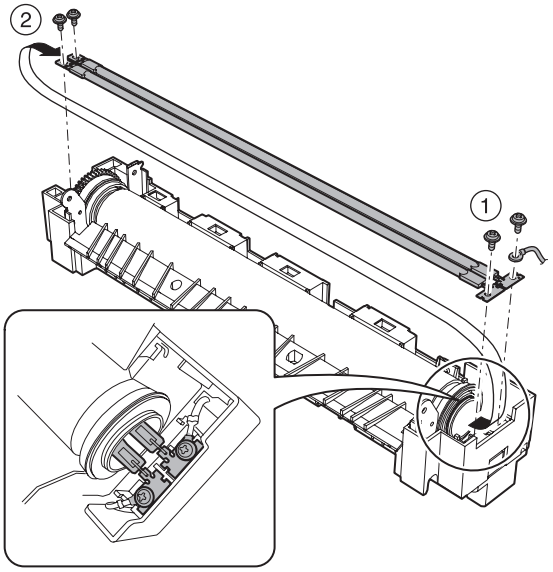

∗ When installing, loosen the screws on the front side ① (drawer ON side) then the screws on the rear side ② (gear side) in this sequence.

∗ Check to confirm again that the screws are tighten securely. (If any screw is loosened, a bad contact may cause heating.)

a-8. Upper heat roller

a-9. Upper heat roller gear

1) Remove the fusing unit.
2) Open the fusing unit.
3) Remove the fusing rear upper PG.
4) Remove the heater lamp.
5) Remove the upper heat roller, the roller stopper. The upper heat roller gear, and the upper heat roller bearing.

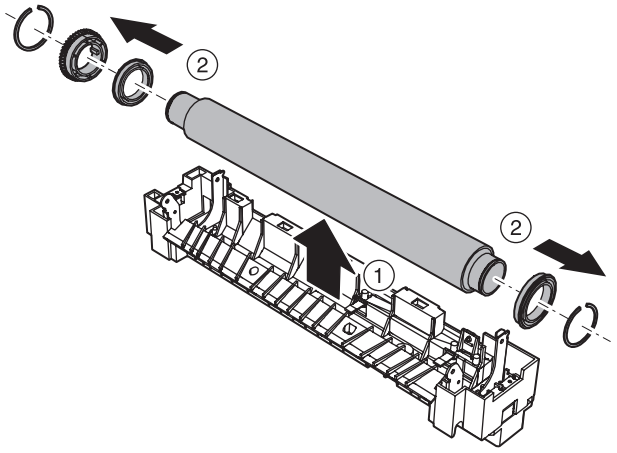

a-10. Thermostat

1) Remove the fusing unit.
2) Open the fusing unit.
3) Remove the fusing rear upper PG.
4) Remove the heater lamp.
5) Remove the upper heat roller.
6) Remove the screw, and remove the electrode plate and the thermostat.

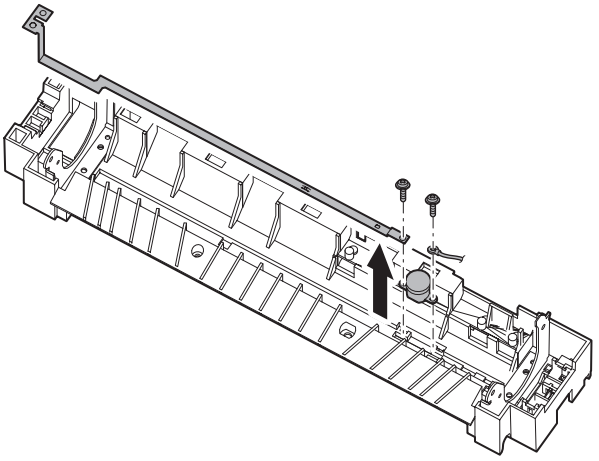

∗ When installing, check to confirm that the screws are securely tighten again. (If any screw is loosened, a bad contact may cause heating.)

3. Paper feed section

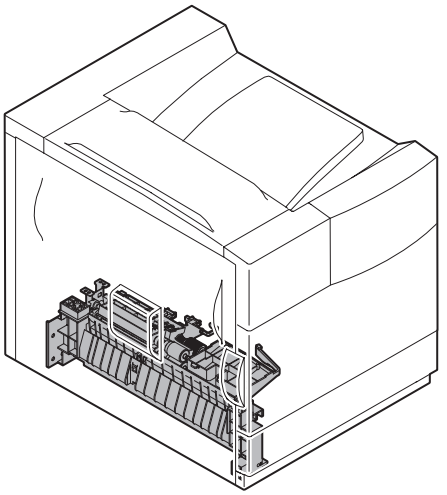

A. General

This section picks up paper in the cassette and feed it to the transport roller section.

The capacity of the paper feed tray is 550 sheets for 64g/m^2 or 500 sheets for 80g/m^2.

There are three kinds of the paper feed desk: 3-stage paper feed desk (AR-D27), 2-stage paper feed desk (AR-D28), and 1-stage paper fed desk (AR-MU2). For details, refer to the AR-D27/D28/MU2 Service Manual.

B. Major parts and signal functions

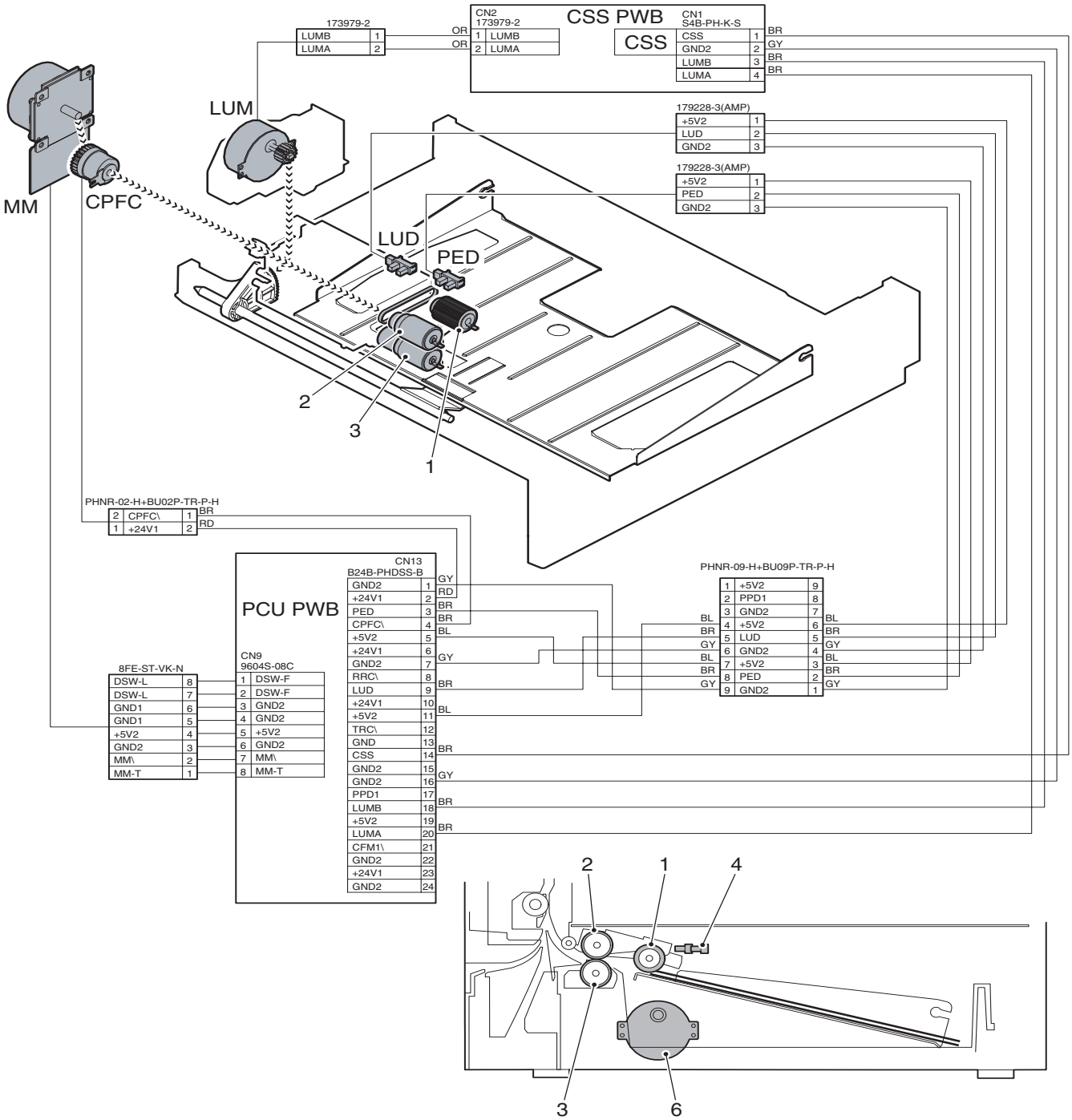

Code	Signal name	Name	Function/Operation	Type	Note
CPFC	CPFC	Paper feed clutch	Paper freed tray section roller ON/ OFF control	Electromagnetic clutch	
LUM	LUM	Paper feed tray lift-up motor	Drives the lift plate of the paper feed tray.	DC brush motor	Selection of Rotation mode/ Brake mode
PED	PED	Defector	Paper empty detection		
LUD	LUD	Defector	Paper tray upper limit detection		

	Name	Function	Remark
1	Take-up roller	Picks up paper and transports it to the paper feed roller.	
2	Paper feed roller	Feed paper in the machine.	
3	Separation roller	Rotates simultaneously with the paper feed roller to prevent against overlapped feed. For the manual feed tray, the separation pad is used instead of the roller.	
4	Paper upper limit sensor	Detects the top surface of paper and stops paper at the feed position.	Except for BPT
5	Paper sensor	Detects paper presence. (Paper empty, upper limit detection: ON / Paper presence detection: OFF)	
6	Lift-up motor	Lifts the paper feed base up to the paper feed position (upper limit detection position).	Except for BPT

C. Operational descriptions

[Paper feed operation]

(1) Preliminary operation except for the manual feed tray

1) Load paper and insert the tray, and the tray sensor will be turned on.
2) The lift-up motor rotates.
3) The upper limit sensor turns on.

(2) Paper feed operation

1) The take-up roller descends.
2) The take-up roller rotates to feed paper.
3) At the same time the paper feed roller rotates to feed paper to the transport section.
4) At that time, the separation roller rotates to prevent against overlapped feed.

[Paper size detection]

(1) Paper width detection VR (MPT/BPT/Machine tray)

Width detection is performed by calculating the voltage (A/D conversion value) of the slide VR in linkage with the side guide plate.

Paper width and paper size

(The range is set to Standard value ± 6 [mm].)

Width detection pattern	Paper size	Standard value (mm)	Range (mm)
A	A3/A4	297.0	303.0- 291.0
B	WLT/LT	279.4	285.4 - 273.4
C	B4/B5	257.0	263.0 - 251.0
D	LG/LTR/Foolscap	215.9	221.9 - 209.9
E	A4R	210.0	216.0 - 204.0
F	Executive-R	184.1	190.1 - 178.1
G	B5R	182.0	188.0 - 176.0

(2) Paper length sensor (MPT/2nd and 3rd steps of 3-step paper feed desk)

Length detection is performed by combination of cassette size sensors 1 - 4.

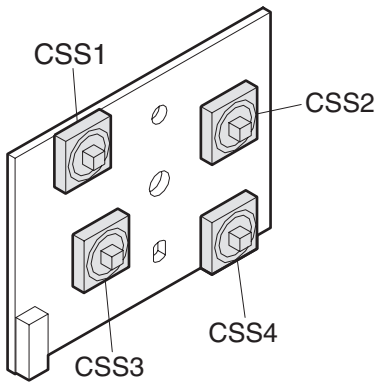

Paper length and paper size

Vertical size detection pattern	Detection SW status				AB series size	Inch series size	Detection width range	Same range size
	CSS1	CSS2	CSS3	CSS4				
1	ON	ON	OFF	ON	B5	EXTRA	147.0 - 198.0	Postcard Monarch
2	OFF	ON	OFF	ON	A4	LT	198.0 - 237.0	DBL P/C C5 DL
3	OFF	ON	ON	ON	B5R	EX-R	237.0 - 274.0	COM-10 ISO-B5
4	OFF	OFF	ON	ON	A4R	LTR	274.0 - 314.0	
5	ON	OFF	ON	ON	Foolscap	Extra	314.0 - 347.0	
6	ON	OFF	ON	OFF	B4	LGL	347.0 - 389.0	
7	ON	ON	ON	OFF	A3	WLT	389.0 - 432.8	
0	OFF	OFF	OFF	OFF	Tray not installed			

(3) Paper detection method of each tray

1) Machine 1st tray

   Paper detection is performed by VR in linkage with both side guides.

2) Multi-purpose tray

   Paper detection is performed by VR in linkage with both side guides and the detector in linkage with the rear edge plate.

Paper size	Width detection pattern	Vertical detection pattern
B5	C	1
A4	A	2
B5R	G	3
A4R	E	4
Foolscap	D	5
B4	B	6
A3	A	7
LT	B	2
EX-R	F	3
LTR	D	4
LGL	D	6
WLT	B	7

For the other than above, the paper size is considered as "Extra."

3) 2nd and 3rd steps of 3-step paper feed tray

   Paper detection is performed by the detector in linkage with the rear edge plate.

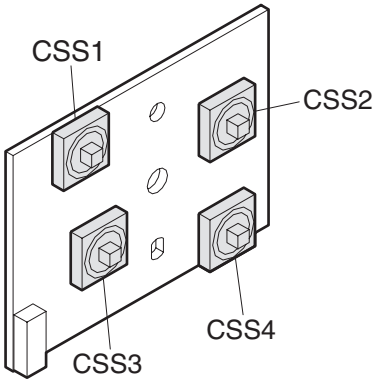

Paper size for automatic detection

Vertical size detection pattern	Detection SW status				AB series size	Inch series size	Detection width range
	CSS1	CSS2	CSS3	CSS4			
1	ON	ON	OFF	ON	B5	EXTRA	147.0 - 198.0
2	OFF	ON	OFF	ON	A4	LT	198.0 - 237.0
3	OFF	ON	ON	ON	B5R	EX-R	237.0 - 274.0
4	OFF	OFF	ON	ON	A4R	LTR	274.0 - 314.0
5	ON	OFF	ON	ON	Foolscap	EXTRA	314.0 - 347.0
6	ON	OFF	ON	OFF	B4	LGL	347.0 - 389.0
7	ON	ON	ON	OFF	A3	WLT	389.0 - 432.8
0	OFF	OFF	OFF	OFF	Tray not installed		

[Paper remaining quantity detection]

(1) Paper remaining quantity detection

Paper remaining quantity detection is common in each tray except for the manual feed tray. Remaining quantity is indicated in 3 steps plus paper empty (4 steps in total).

(2) Detection method

Paper remaining quantity is detected by the number of times of changing of the remaining quantity sensor from when the tray starts lifting up to when the upper limit sensor turns on.

(Remaining quantity sensor status change when the tray is moving up and remaining quantity)

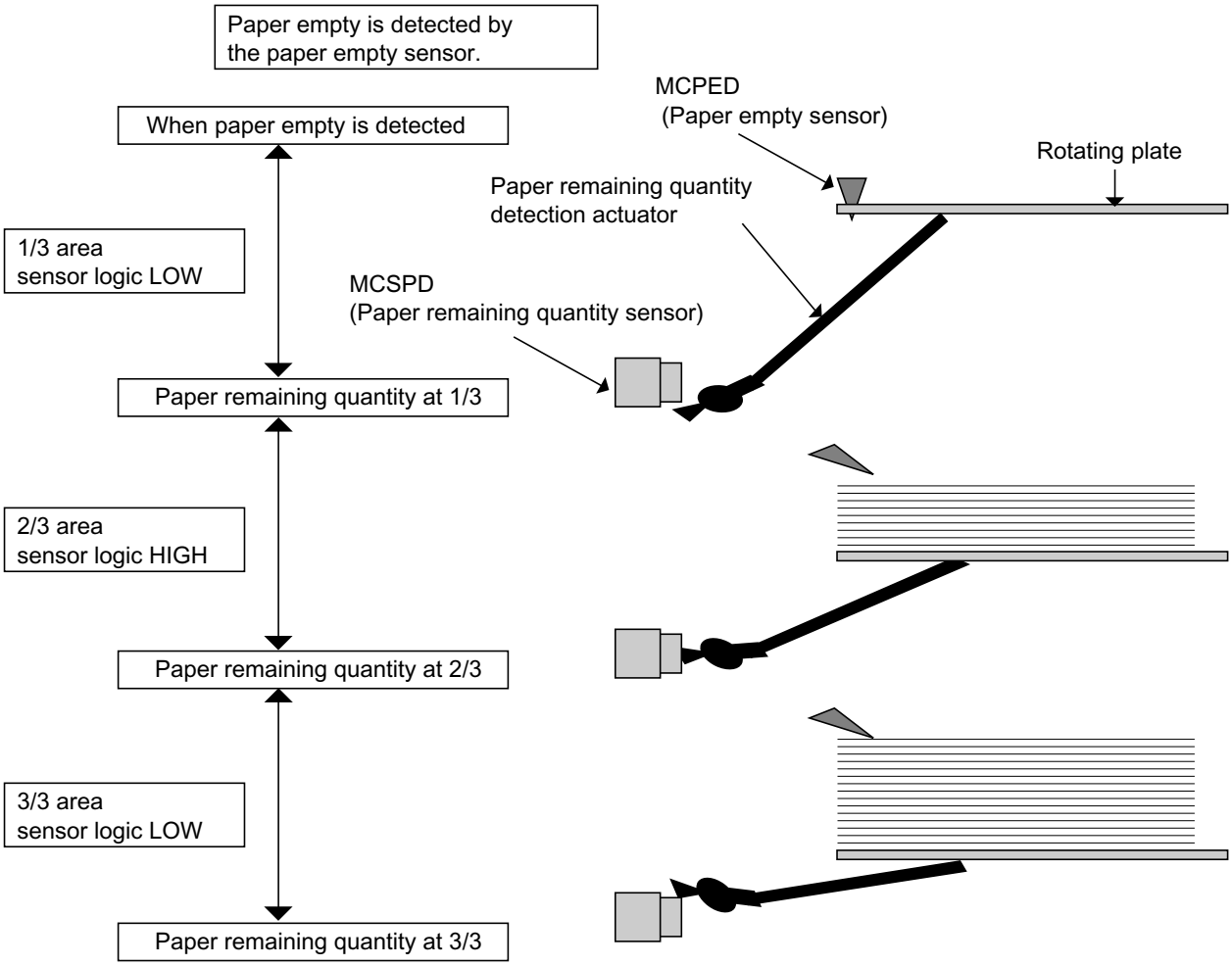

Indication of remaining quantity	Sensor status
Paper quantity: 100%	Paper quantity sensor: OFF
Paper quantity: 66%	Paper quantity sensor: ON
Paper quantity: 33%	Paper quantity sensor: OFF (2nd time)
Paper quantity: 0%	Paper sensor: OFF

D. Maintenance and parts replacement

(1) Maintenance list

Unit name	No.	Part name	When calling	100K	200K	300K	400K	500K	600K	700K	800K	Remark
Paper feed section	1	Pick-up roller	×	×	×	×	×	×	×	×	×	Note 1
	2	Paper feed roller	×	×	×	×	×	×	×	×	×	Note 1
	3	Separation roller	×	×	×	×	×	×	×	×	×	Note 1
	4	Torque limiter	×	×	×	×	×	×	×	×	×	Note 1

Note 1: Replacement reference: Use the counter value of each paper feed port as the replacement reference.
Paper feed roller/Separation pad/Torque limiter section (Include Desk, Multi purpose): 100K or 1 years

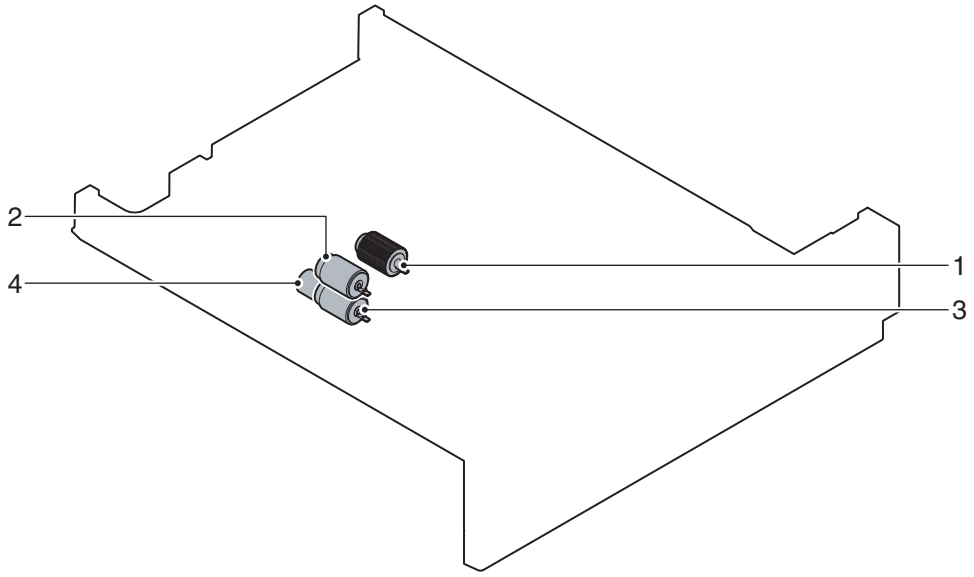

(2) Maintenance and parts replacement

No.	Unit	Parts		
a		1	Pick-up roller	×
		2	Paper feed roller	×
		3	Separation roller	×
		4	Torque limiter	×
		5	Paper feed cassette upper limit detection	
		6	Paper feed cassette paper empty detection	
		7	Cassette detection PWB	
		8	Lift-up motor	

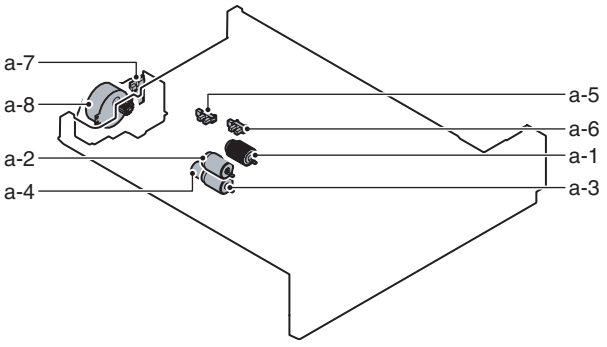

a-1. Pick-up roller

a-2. Paper feed roller

a-3. Separation roller

a-4. Torque limiter

1) Pull out No. 1 paper feed tray unit.

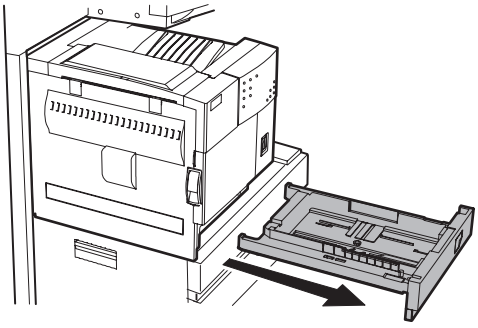

2) Disengage the pawl, and remove the paper guide.

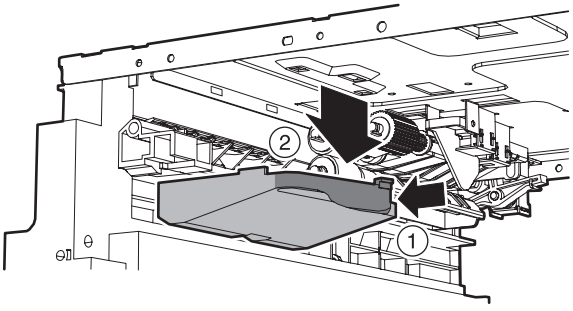

3) Disengage the pawl, and remove the pickup roller and the paper feed roller.

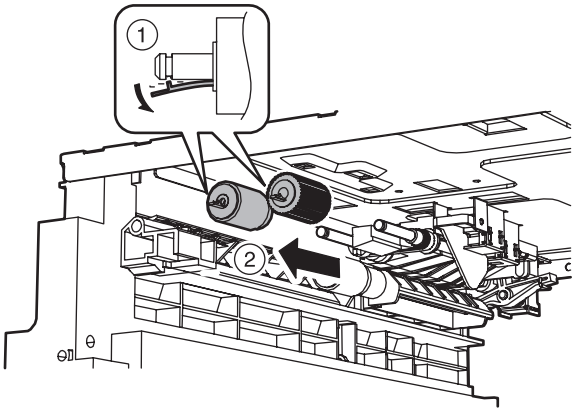

4) Disengage the pawl, and remove the separation roller and the torque limiter.

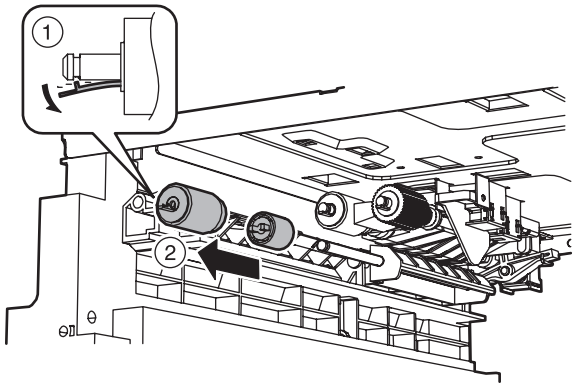

a-5. Paper feed cassette upper limit detection

a-6. Paper feed cassette paper empty detection

1) Pull out No. 1 paper feed tray unit, and remove the paper guide.
2) Remove the screw, and remove the pickup roller arm.
3) Remove the paper feed roller and each part.
4) Remove the pickup roller shaft, and remove the pickup roller guide.
5) Remove the actuator.
6) Remove the connector, the paper feed cassette upper limit detection, and the paper feed cassette paper empty detection.

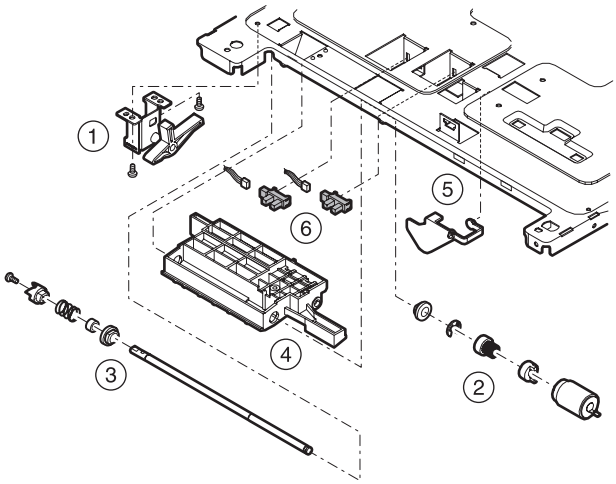

a-7. Cassette detection PWB

1) Remove the screw, and remove the rear cabinet.

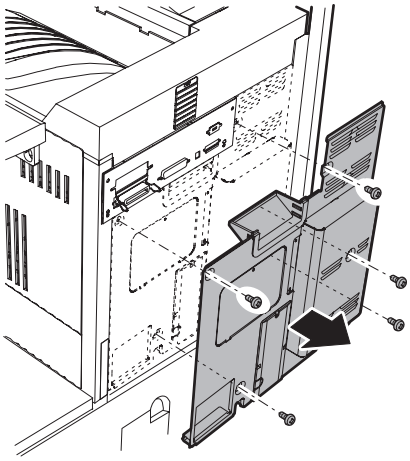

2) Remove the connector, and remove the cassette detection PWB.

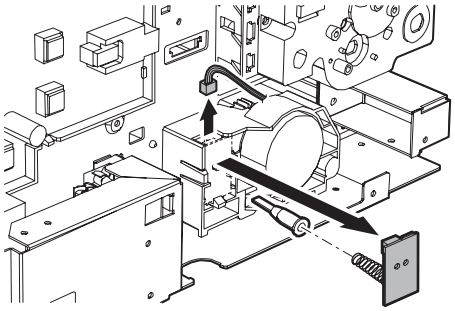

a-8. Lift-up motor

1) Remove the screw, and remove the rear cabinet.

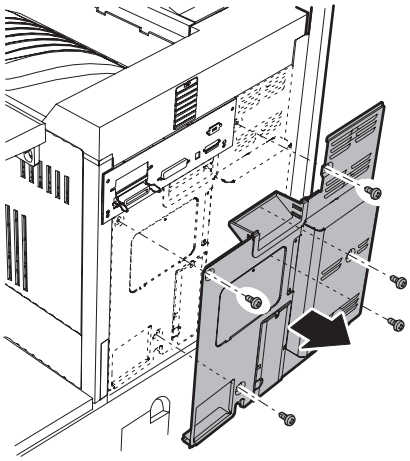

2) Remove the connector and the screw, and remove the lift-up motor unit.

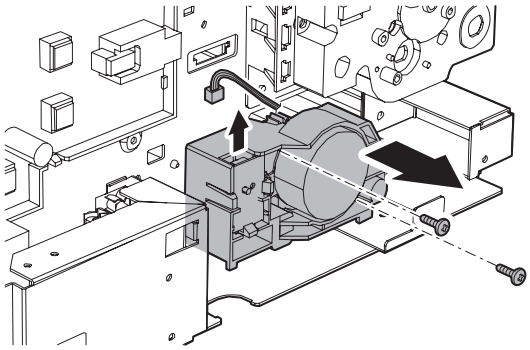

3) Remove the E-ring, the gear, and the spring.
4) Remove the screw, and remove the lift-up motor.

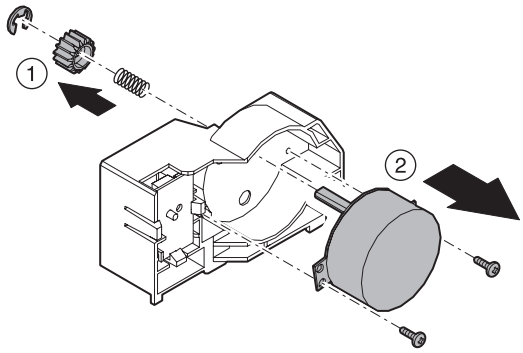

4. Transport section/Paper exit reverse section

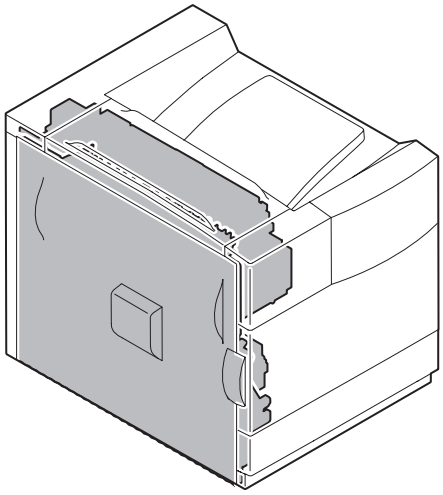

A. General

In this paper transport section, paper fed from each paper feed port is transported to the resist roller section, where the lead edge of the paper is aligned with the lead edge of images on the OPC drum. Images are transferred onto paper in the transfer section, and the paper is discharged face-up or face-down through the fusing section.

B. Major parts and signal functions

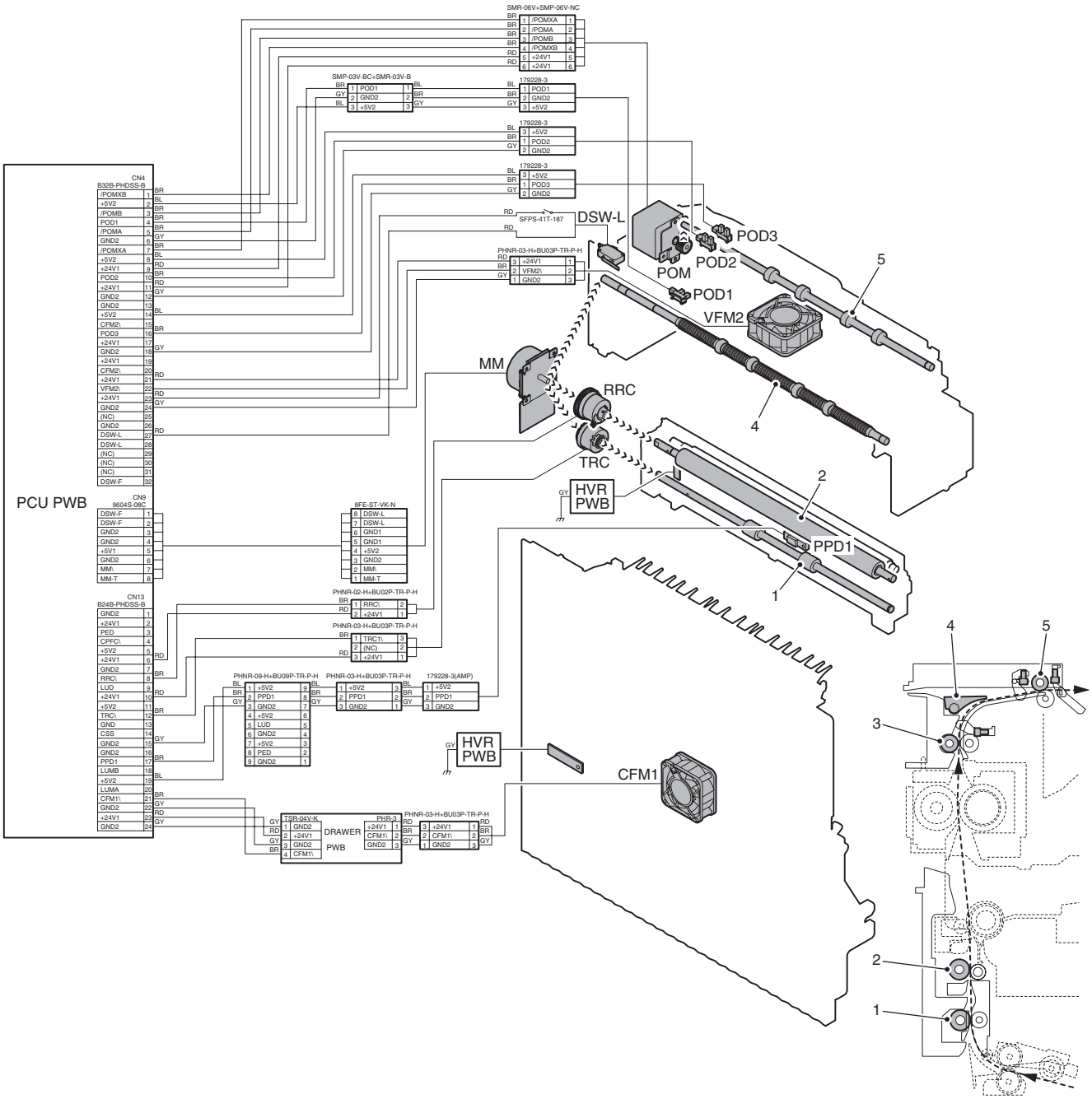

Code	Signal name	Name	Function/Operation	Type	Note
POD1	POD1	Paper exit detector 1	Paper exit detection from fusing	Transmission type	Paper transport system sensor
POD2	POD2	Paper exit detector 2	Paper pass detection from paper exit	Transmission type	Paper transport system sensor
POD3	POD3	Paper exit detector 3	Paper exit detection to upper section paper exit tray (Full detection)	Transmission type	Paper transport system sensor
POM	POM	Paper exit motor	Drives the paper exit roller.	Stepping motor	Selection of Normal speed/ High speed/ Reverse rotation
VFM2	VFM2	Fusing cooling fan motor	Discharges heat generated in the fusing section.	DC brushless motor	PWM control
CFM1	CFM1	Fusing cooling fan motor	Discharges heat generated in the fusing section to cool it.	DC brushless motor	PWM control

Code	Signal name	Name	Function/Operation	Type	Note
RRC	RRC	Resist roller clutch	Resist roller ON/OFF control	Electromagnetic clutch	
TRC	TRC	Paper transport roller clutch	Paper transport roller ON/OFF control	Electromagnetic clutch	
MM	MM	Main motor	Drives the paper transport and resist roller	DC brushless motor	Paper pass

No.	Name	Function
1	Transport roller 15	Transports paper to the transport resist roller.
2	Resist roller (Drive)	Transports paper to the transfer section. / Controls the transport timing of paper to adjust the relationship between images and paper.
4	Paper exit and transport roller	Transports paper from the fusing roller to the paper exit roller.
5	Paper exit roller	Discharges paper to the paper exit tray. / Switchbacks paper.

C. Operational descriptions

[Paper transport path and paper exit]

Paper transport path with an option installed

1.

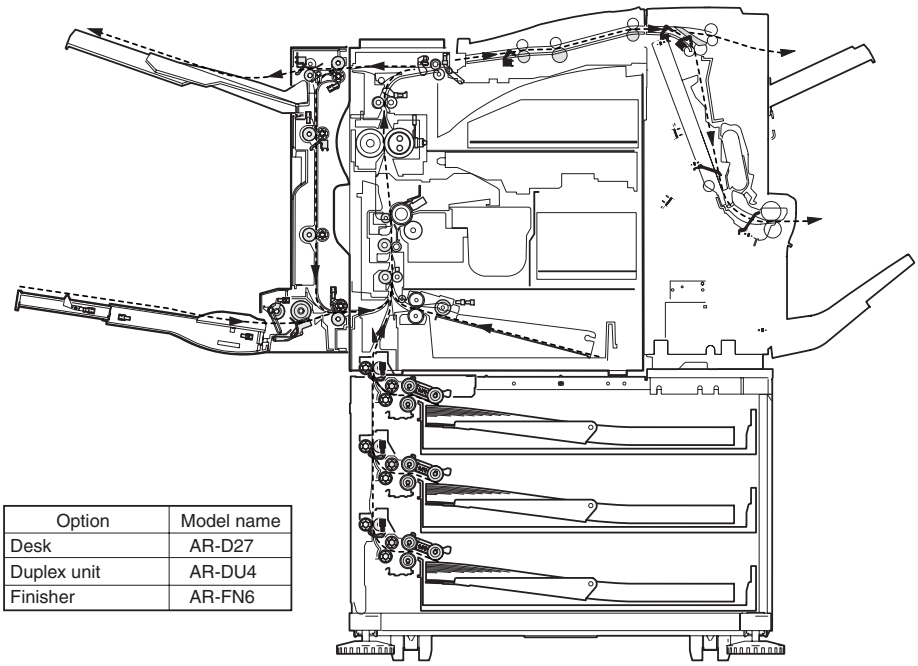

Option	Model name
Desk	AR-D27
Duplex unit	AR-DU4
Finisher	AR-FN6

2.

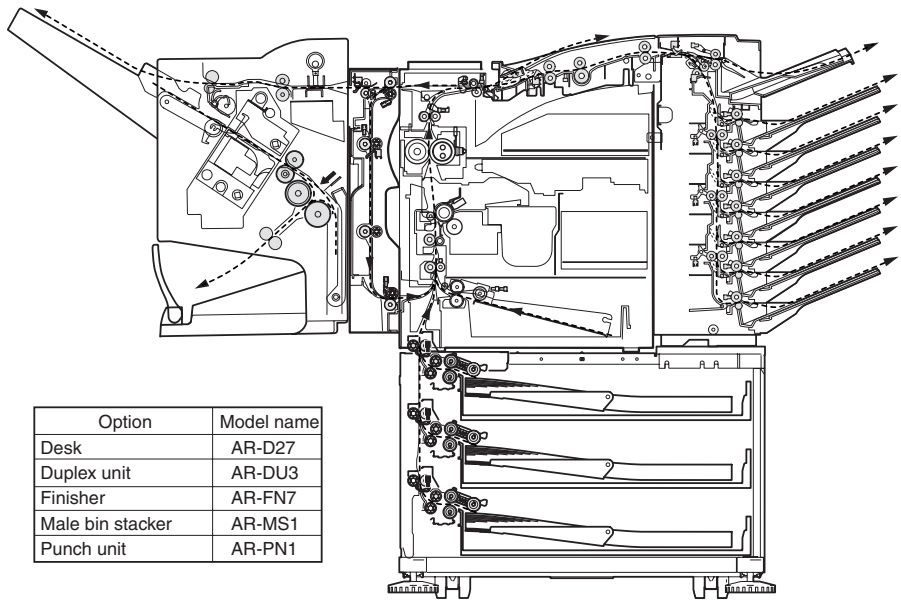

Option	Model name
Desk	AR-D27
Duplex unit	AR-DU3
Finisher	AR-FN7
Male bin stacker	AR-MS1
Punch unit	AR-PN1

3. Paper transport in duplex printing (with AR-DU3/DU4 installed)

(1) Switchback operation and paper exit to the left tray

1) Paper transported from the fusing section is sent to the paper exit section of the machine.
2) When the male bin stacker (AR-MS1) or the finisher (AR-FN5) is installed, the paper entry gate solenoid (FGS) selects the paper entry gate to discharge paper outside the machine.
3) The paper exit sensor (POD2) detects the rear edge of paper, and the paper exit motor (POM) is rotated reversely.

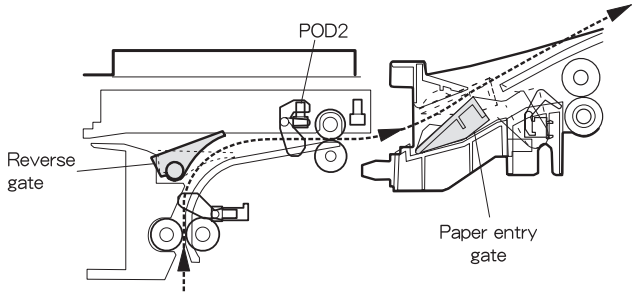

4) Paper is taken into the machine again, passed over the reverse gate, and transported to the duplex unit.
5) When duplex printing is made, the ADU gate solenoid switches to the upper side of the ADU paper exit gate to switch the paper path to the ADU.

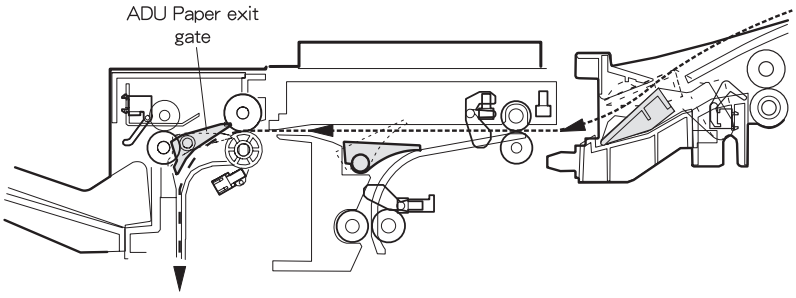

6) When paper is discharged to the left tray or when paper is transported to the console finisher (AR-FN7), the ADU gate solenoid switches to the upper side of the ADU paper exit gate to switch the paper path to the ADU.

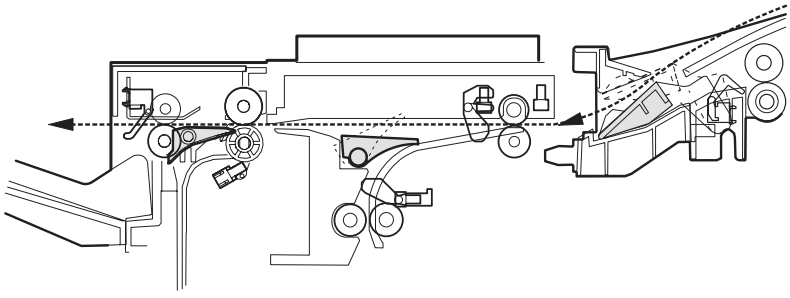

(2) Paper transport speed in duplex printing

The transport speed may be doubled in duplex printing depending on the paper position.

The positions of double speed are as follows:

1) From when the rear edge of paper passes the fusing section to when switchback operation is started.
2) From switchback operation, after the lead edge of paper passes APPD1, until a certain amount is transported.
3) After that, paper is stopped at the ADU paper feed position, and fed to the laser printer again.

4. Transport with AR-FN6 installed

The AR-FN6 is provided with the decurler to improve alignment capability of finishing.

The decurler makes decurling against curling of paper by means of the difference in rigidity of the upper roller (metal) and the lower roller (sponge).

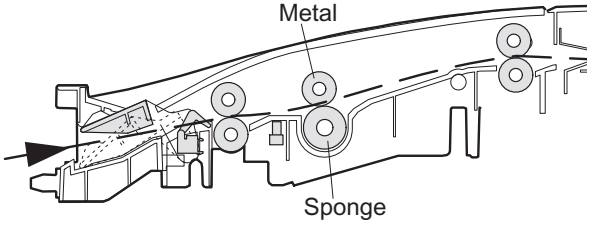

D. Maintenance and parts replacement

(1) Maintenance list

Unit name	No.	Part name	When calling	100K	200K	300K	400K	500K	600K	700K	800K	Remark
Transport section/ Paper exit reverse section	1	Resist roller	×	❍	❍	❍	❍	❍	❍	❍	❍	
	2	Transport rollers	×	❍	❍	❍	❍	❍	❍	❍	❍	
	3	Transport paper guides	❍	❍	❍	❍	❍	❍	❍	❍	❍	
	4	Paper dust remover unit	❍	❍	▲	❍	▲	❍	▲	❍	▲	
	5	Paper transport detection										

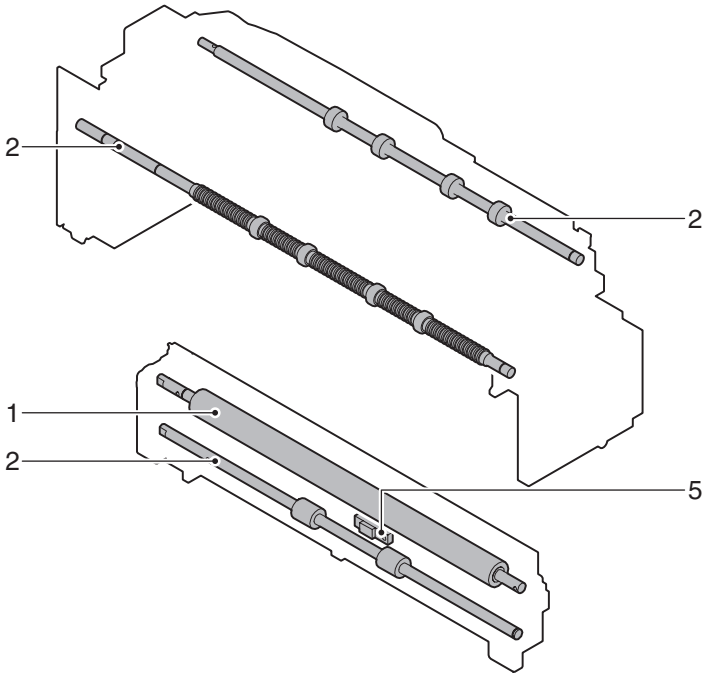

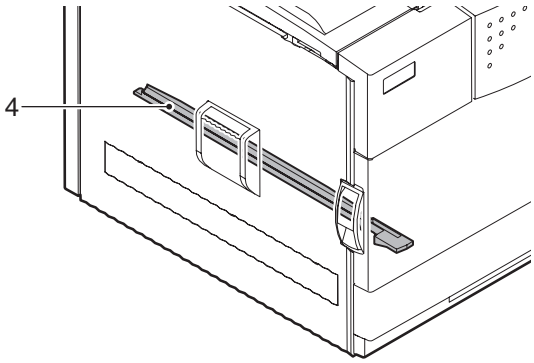

(2) Maintenance and parts replacement

No.	Unit	Parts		
a		1	Paper dust remover unit	❍
b	Resist roller unit	1	Resist roller	×❍
		2	Paper transport roller	
		3	Paper transport detection	
		4	High voltage resistor PWB	
c	Left door unit	1	Suction fan motor	
		2	High voltage resistor PWB	
		3	Drawer PWB	
d	Paper exit reverse unit	1	Paper exit detection 1	
		2	Paper exit motor	
		3	Left door open/close detection	
		4	Exhaust heat fan motor	
		5	Paper exit detection 2	
		6	Paper exit full detection	
		7	After-fusing roller	
		8	Paper exit roller	

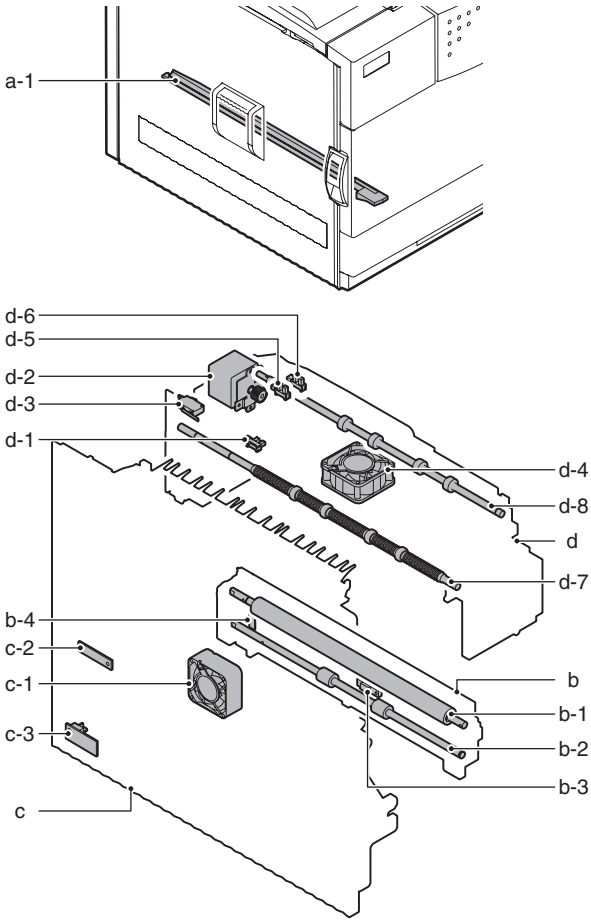

a-1. Paper dust remover unit

1) Open the front door.

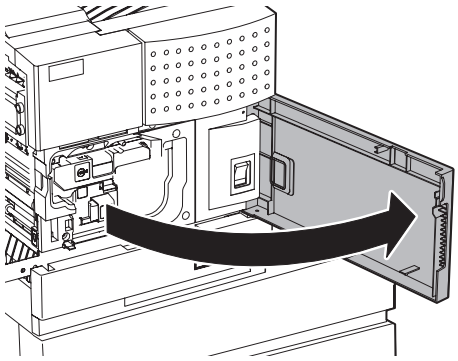

2) Remove the paper dust cleaner unit.

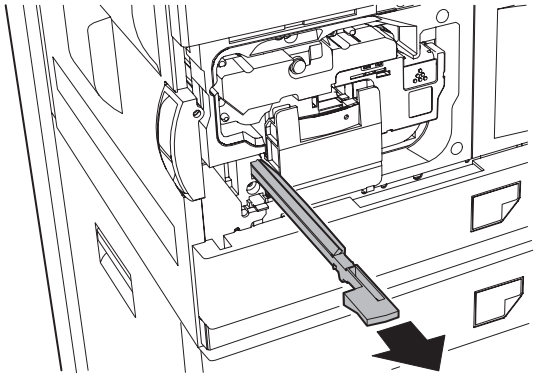

b. Resist roller unit

1) Remove the paper dust cleaner unit.
2) Remove the screw, and remove the resist roller unit. Disconnect the connector.

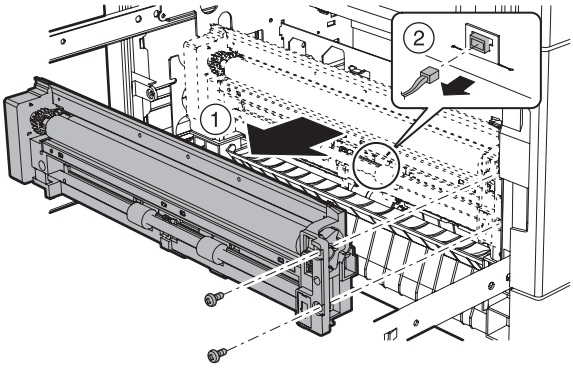

b-1. Resist roller

1) Remove the paper dust cleaner unit.
2) Remove the resist roller unit.
3) Remove the parts, and remove the resist roller.
4) Remove the gear, the parallel pin, and the E-ring.

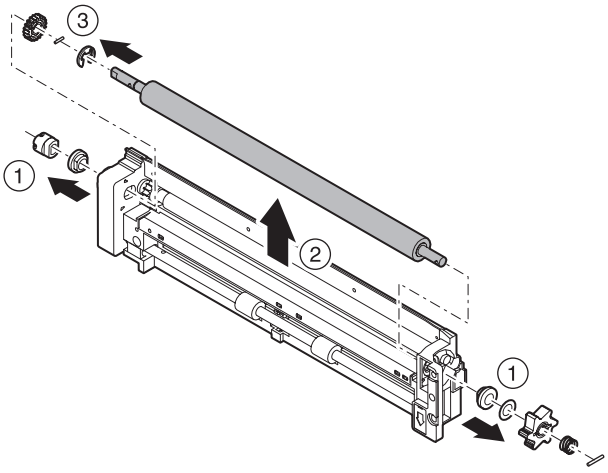

b-2. Paper transport roller

1) Remove the paper dust cleaner unit.
2) Remove the resist roller unit.
3) Remove the parts, and remove the paper transport roller.

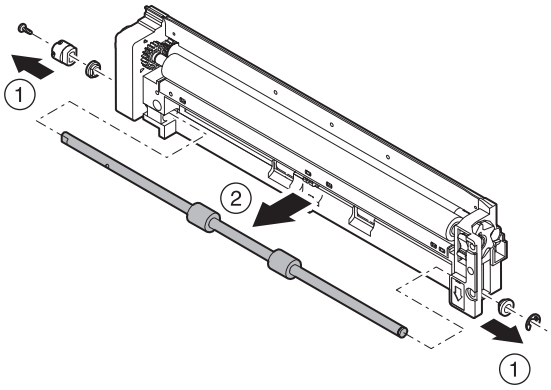

b-3. Paper transport detection

b-4. High voltage resistor PWB

1) Remove the paper dust cleaner unit.
2) Remove the resist roller unit.
3) Remove the screw, and remove the paper dust cleaner guide.

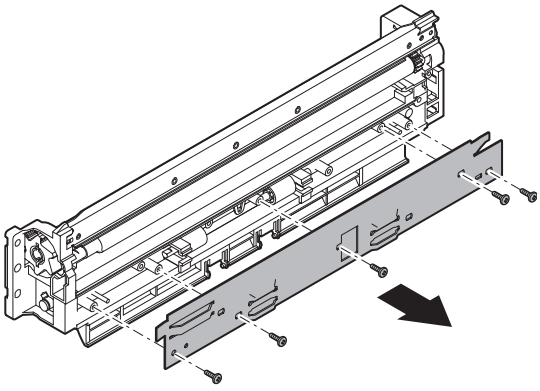

4) Remove the screw and the connector, and remove the paper transport detector.
5) Remove the screw and the earth wire, and remove the high voltage resistor PWB.

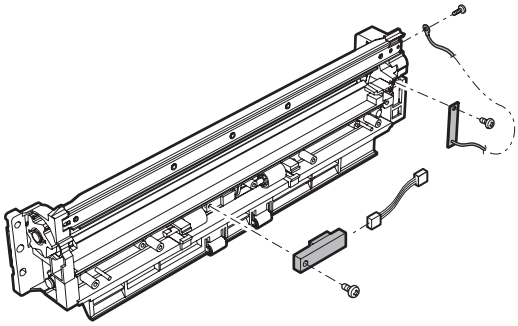

c. Left door unit

1) Remove the screw, and remove the left door unit.

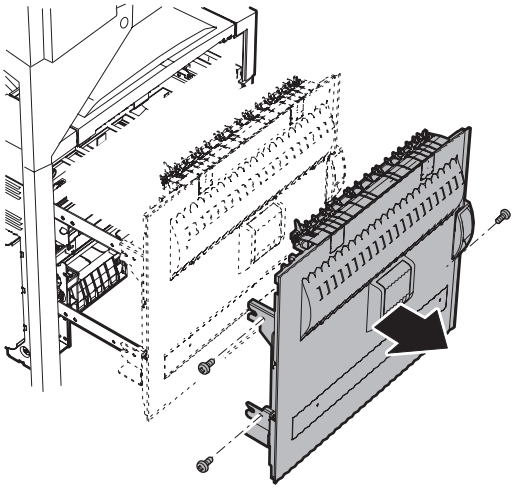

c-1. Suction fan motor

c-2. High voltage resistor PWB

1) Remove the left door unit.
2) Remove the screw, and remove the transfer lock pawl.
3) Remove the screw, and remove the left door transport paper guide.

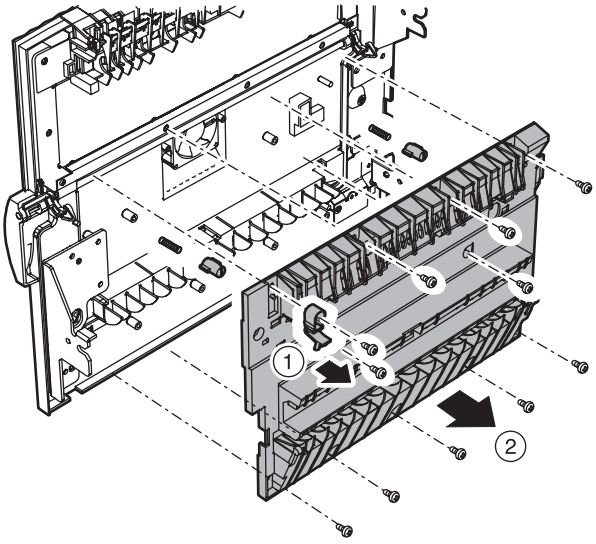

3) Remove the connector, the screw, and the washer, and remove the suction fan motor.
4) Remove the screw, and remove the high voltage resistor PWB.

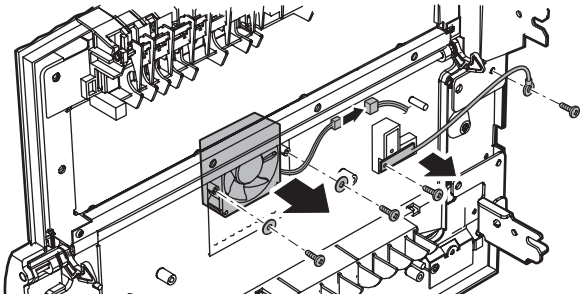

∗ When installing the fan, check the left door indication arrow and note the fan direction.

c-3. Drawer PWB

1) Remove the left door unit.
2) Remove the left door transport paper guide.
3) Remove the screw, and the reverse gate unit and remove the angle.

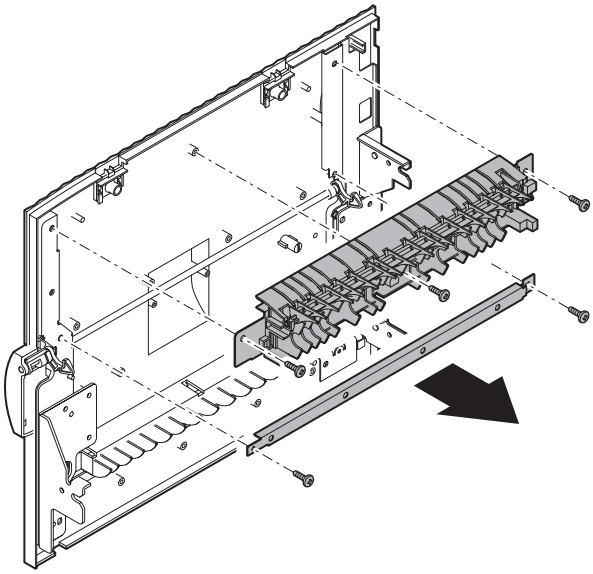

4) Remove the screw, and remove the angle.
5) Remove the connector, the screw, and remove the drawer PWB.

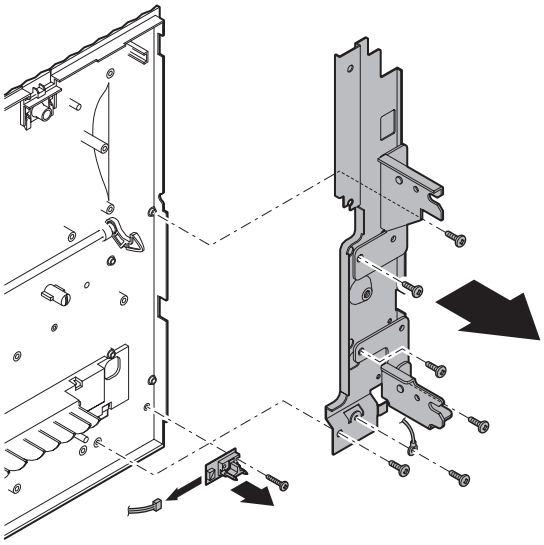

d. Paper exit reverse unit

1) Pull out the left door.

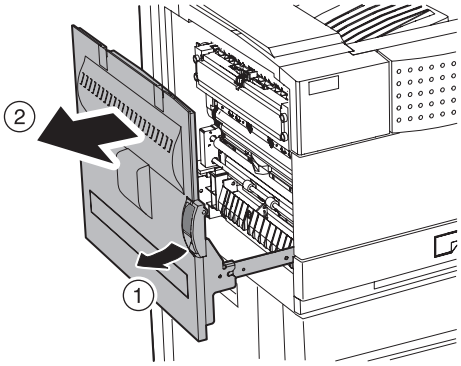

2) Remove the screw, and remove the rear cabinet.

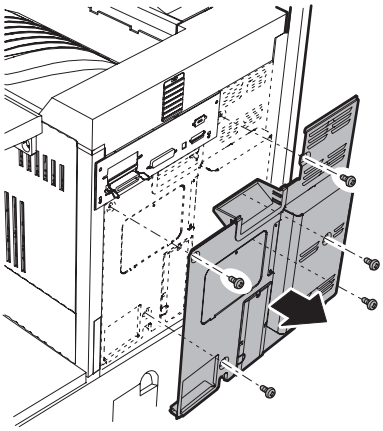

3) Remove the screw, and remove the paper exit upper cabinet.
4) Remove the screw, and remove the left rear cabinet.
5) Remove the screw, and remove the front left upper cabinet.

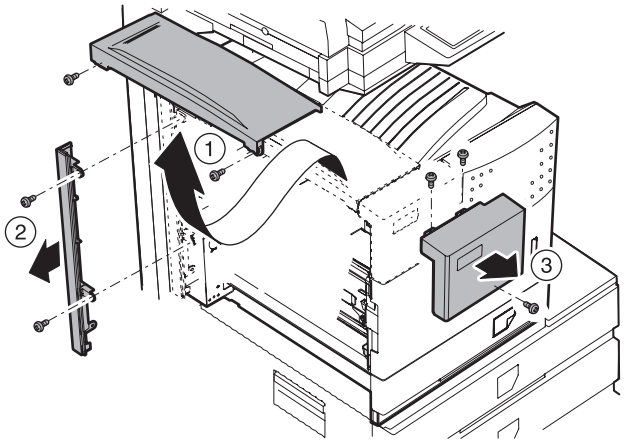

6) Remove the screw, and remove the paper exit tray cabinet.
7) Remove the screw, and remove the front right upper cabinet.
8) Remove the front door.

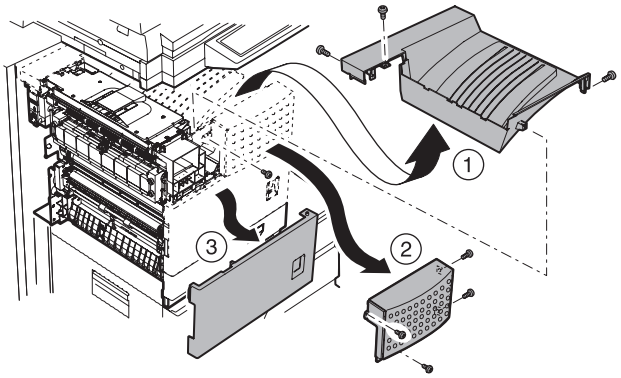

9) Remove the E-ring and the parts.
10) Remove the screw and the connector, and remove the paper exit reverse unit.

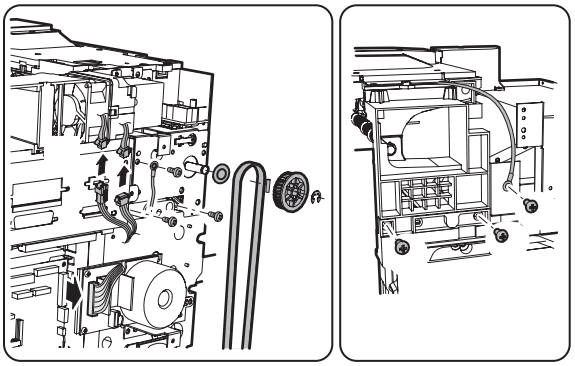

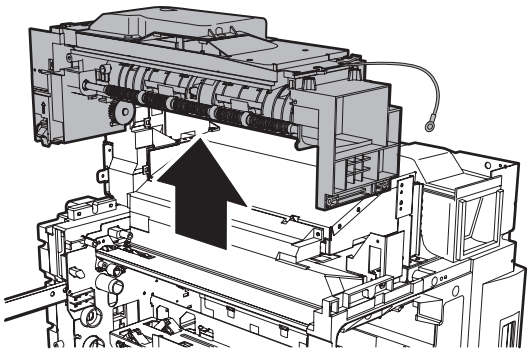

d-1. Paper exit detection 1

1) Remove the paper exit reverse unit.
2) Remove the actuator. Remove the connector, and remove the paper exit detection 1.

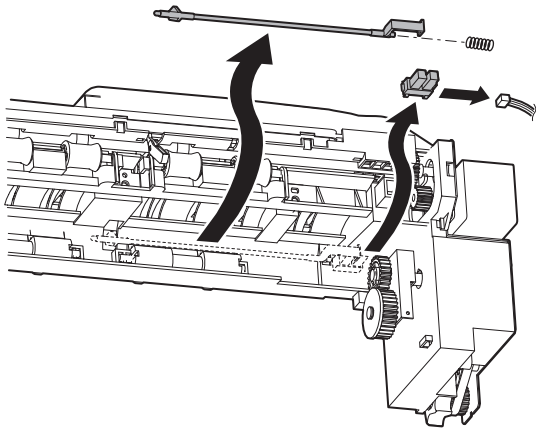

d-2. Paper exit motor

1) Remove the paper exit reverse unit.
2) Remove the connector and the screw, and remove the paper exit motor.

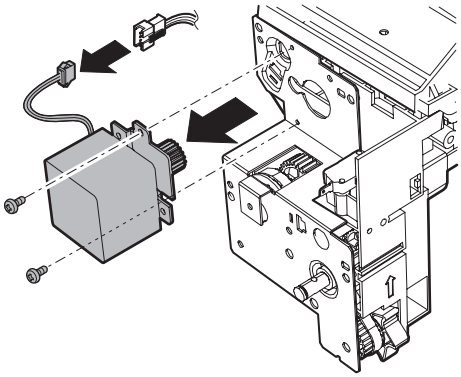

d-3. Left door open/close detection

1) Remove the paper exit reverse unit.
2) Remove the connector and the screw, and remove the left door open/close detection.

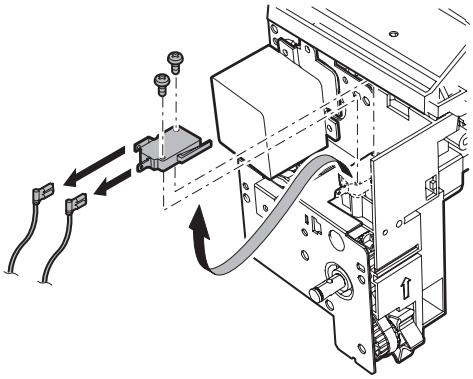

d-4. Exhaust heat fan motor

d-5. Paper exit detection 2

d-6. Paper exit full detection

1) Remove the paper exit reverse unit.
2) Remove the screw, and remove the exhaust duct.
3) Remove the screw, and remove the paper exit upper paper guide reinforcement plate.

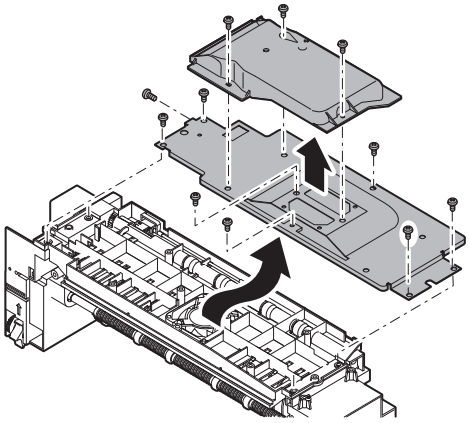

4) Remove the connector, the exhaust heat fan, the paper exit detection 2, the paper exit full detection.

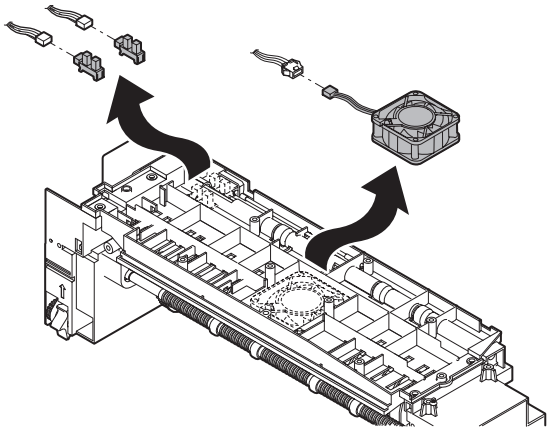

∗ When installing the fan, check the indication arrow and note the fan direction.

d-7. After-fusing roller

1) Remove the paper exit reverse unit.
2) Remove the E-ring and the parts.
3) Remove the connector and the screw, and remove the paper exit drive frame.

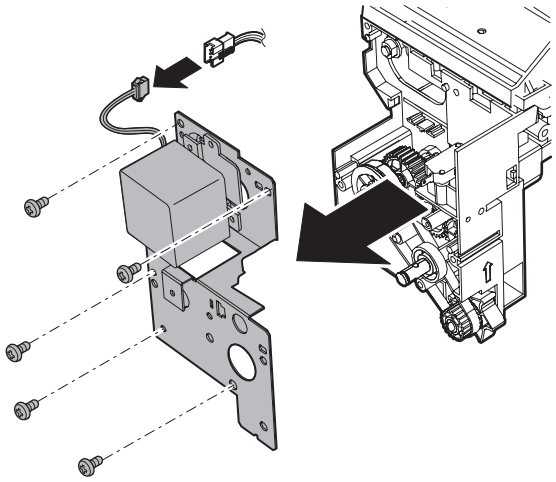

4) Remove the bearing, the E-ring, and the parts.
5) Remove the E-ring, and remove the fusing rear roller. Remove the bearing.

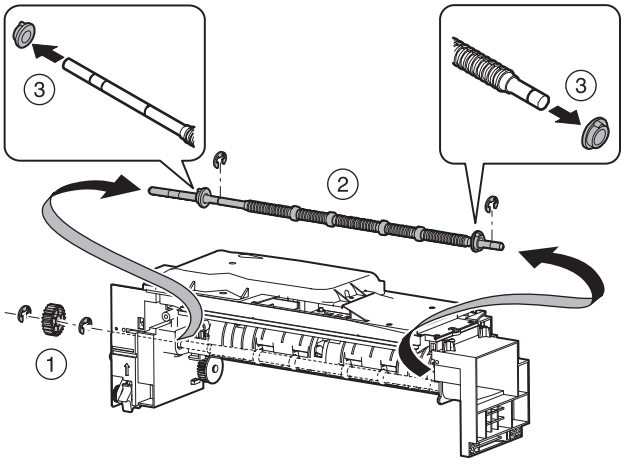

d-8. Paper exit roller

1) Remove the paper exit reverse unit.
2) Remove the screw, and remove the paper exit upper paper guide unit.

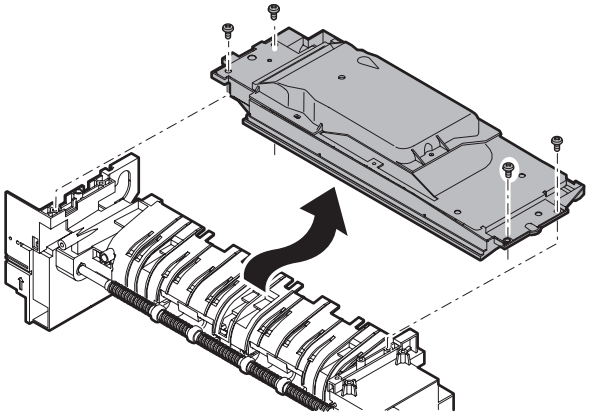

3) Remove the E-ring, and remove the paper exit roller. Remove the bearing, the gear, and the parallel pin.

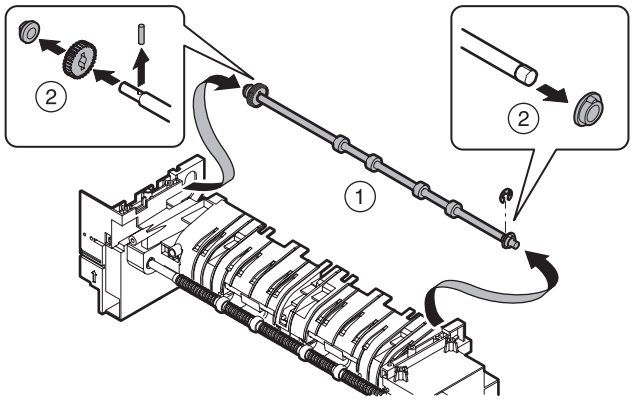

5. Laser scanner section

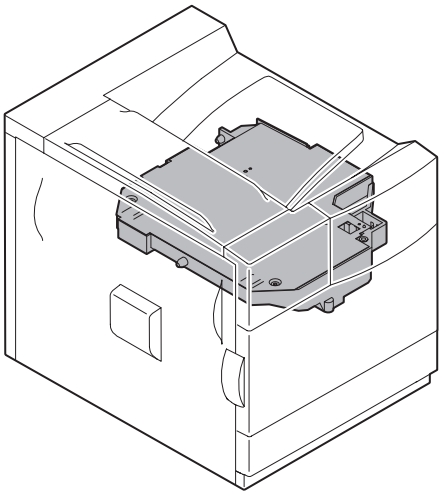

A. General

Image data sent from the MFP (image process circuit) through the mother board and PCU are converted into laser beams to radiate onto the drum surface.

B. Major parts and signal functions

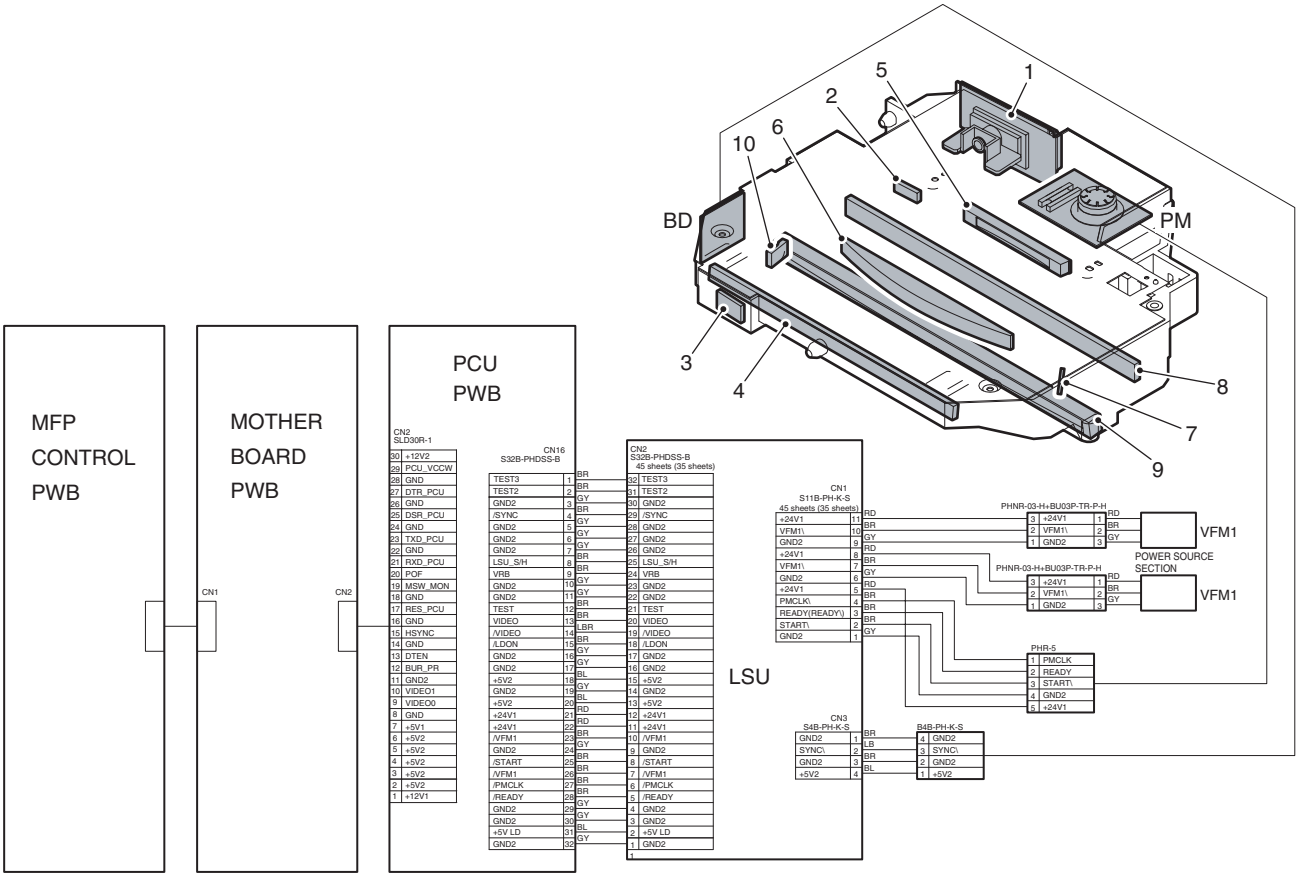

Code	Signal name	Name	Type	Function/Operation	NOTE
PM	PM	Polygon mirror (motor)		Reflects laser beams at the constant rotation speed.	
BD		BD PWB		Detects the laser scan start timing. This device is used to detect a laser trouble.	

No.	Name	Code, signal name	Function
RW	Control signal	+5VLD	5V power for laser diode
RW	Control signal	/READY	Polygon mirror motor READY signal ("L" in the constant speed rotation)
RW	Control signal	/PMCLK	Clock signal for driving the polygon mirror motor
RW	Control signal	/START	Polygon mirror motor drive start signal
RW	Control signal	/VIDEO	VIDEO (Image signal)
RW	Control signal	/SYNC	Sync signal (SYNC) from BD, sync signal for 1 line

No.	Name	Function
1	Laser control PWB	Controls laser beam flashing and the output value.
2	Cylindrical lens	Converges laser beams to focus.
3	Incidence reflection mirror	Assures the optical path for laser beams.
4	No. 1 mirror	Assures the optical path for laser beams.
5	fθ lens 1	Deflects laser beams so that the laser scan speeds on the both ends of the drum and that at the center of the drum are the same.
6	fθ lens 2	
7	BD PWB	Detects the timing of laser scan start. This device is used to detect a laser trouble.
8	No. 2 mirror	Converges laser beams to focus.
9	Plane lens	Assures the optical path for laser beams.
10	Convergence lens for BD	Converges laser beams onto the BD PWB.

C. Operational descriptions

[Laser optical path]

∗ The LSU must not be disassembled in the market.

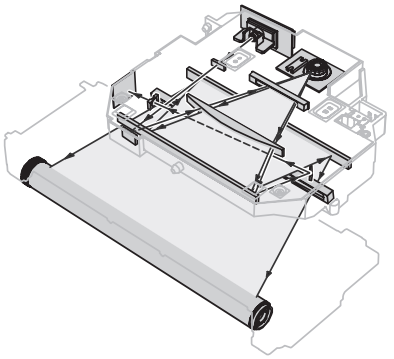

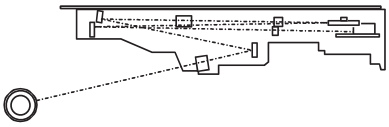

(1) Polygon motor

Model	Number of mirrors	RPM	Bearing	
31/35PPM	14	17000RPM	OIL	Superior in silence.
45PPM	14	22000RPM	OIL	

(2) Outline of LSU specifications

Effective scan width: 297mm
Resolution: 600dpi
Beam diameter: Main scan = 60 - 85 μm
Sub scan = 75 - 110 μm
Laser power: 0.23±0.01mW (45 PPM)
0.19±0.01mW (35 PPM)
LD wave length: 770 - 795nm

D. Maintenance and parts replacement

No.	Unit	Parts	
a		1	LSU

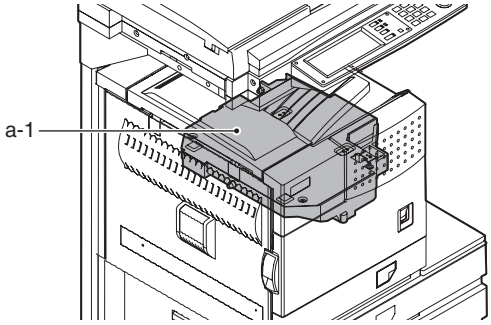

a-1. LSU

1) Remove the screw, and remove the right cabinet.

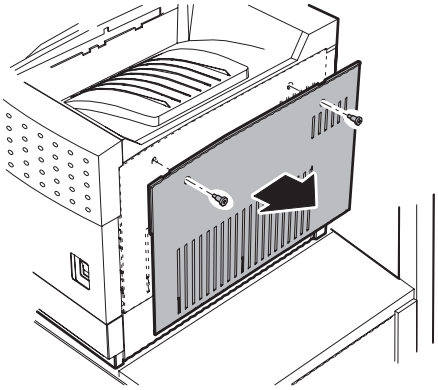

2) Remove the screw, and remove the right noise cover.

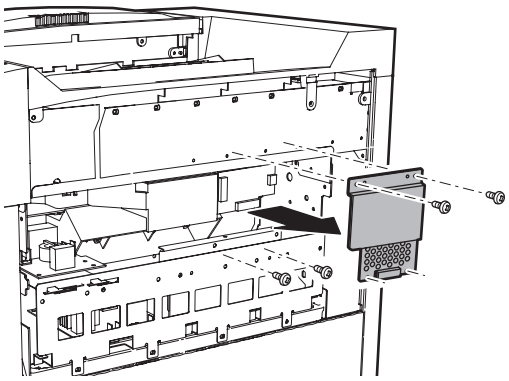

3) Remove the connector, and remove the screw.

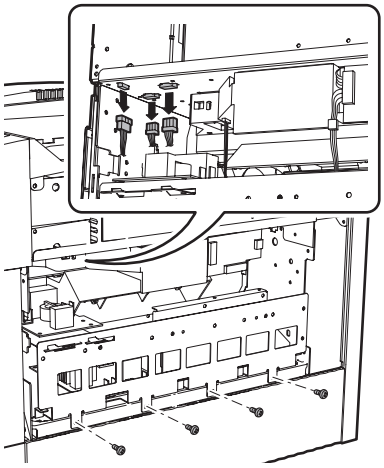

4) Remove the screw, and remove the rear cabinet.

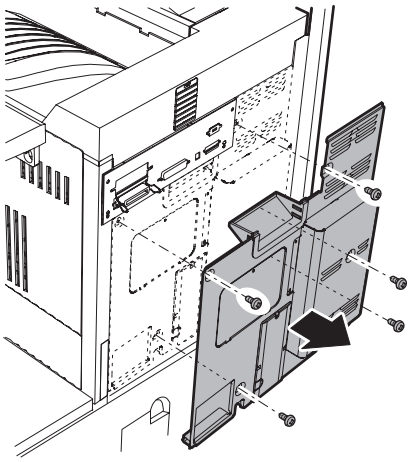

5) Remove the connector, the screw, and the angle. Remove the snap band.

∗ Do not disconnect the LSU side.

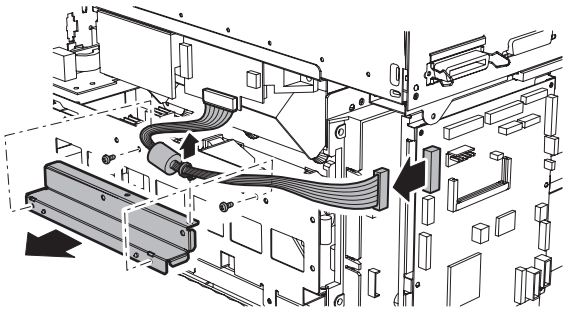

6) Pull out the No. 1 paper feed tray unit, and push up and remove the front door.

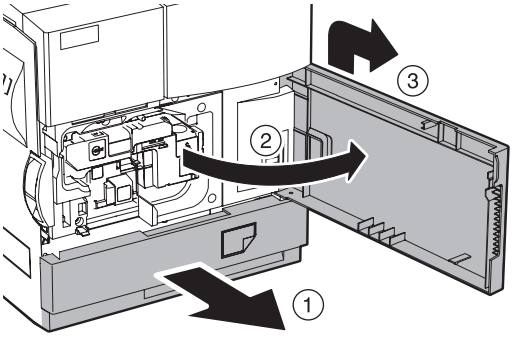

7) Release the lock, and pull out the left door. Remove the screw, and remove the front cover right.

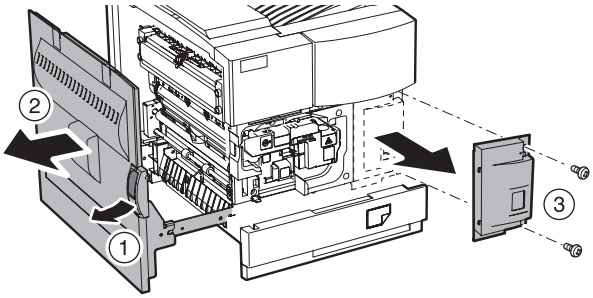

8) Remove the screw, and remove the main switch mounting plate.

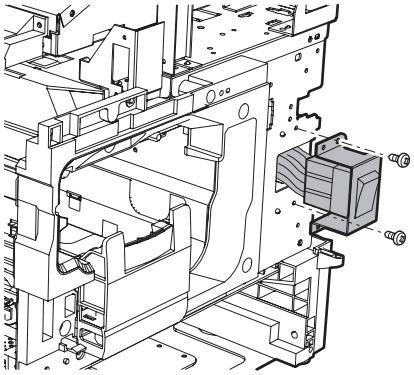

9) Remove the power unit.

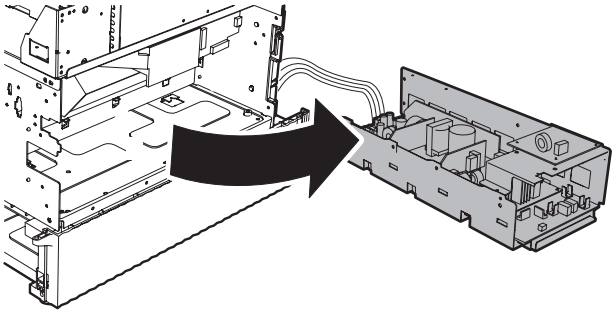

10) Remove the connector and the screw, and remove the duct holding cover.

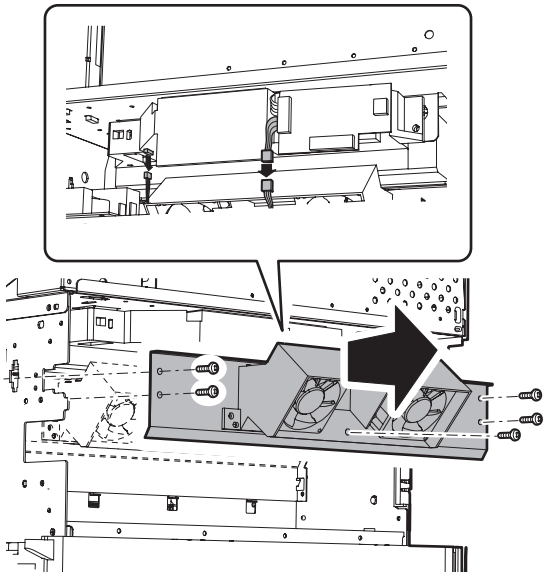

11) Remove the screw, and remove the LSU.

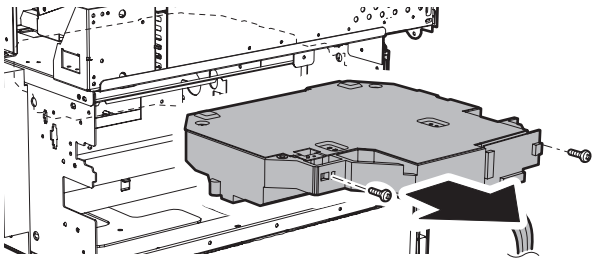

6. Scanner section

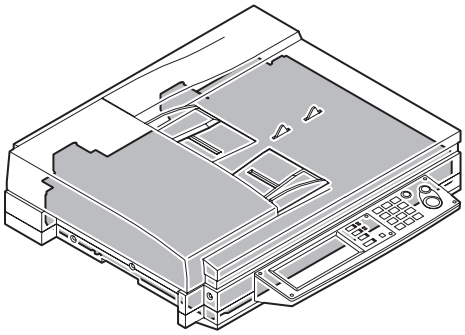

A. General

There are following three methods of scanning documents in this machine.

a. Place a document on the table glass. The copy lamp unit is operated to radiate copy lamp light onto the document, scanning the document with the CCD.

b. The SPF feeds a document. The copy lamp light is radiated onto the document which is stopped at the specified position and the document is scanned by the CCD.

c. The SPF feed a document. The LED light of the CIS unit which is attached to the SPF is radiated to the back of the document, and the document is scanned by the CIS.

B. Major parts and signal functions

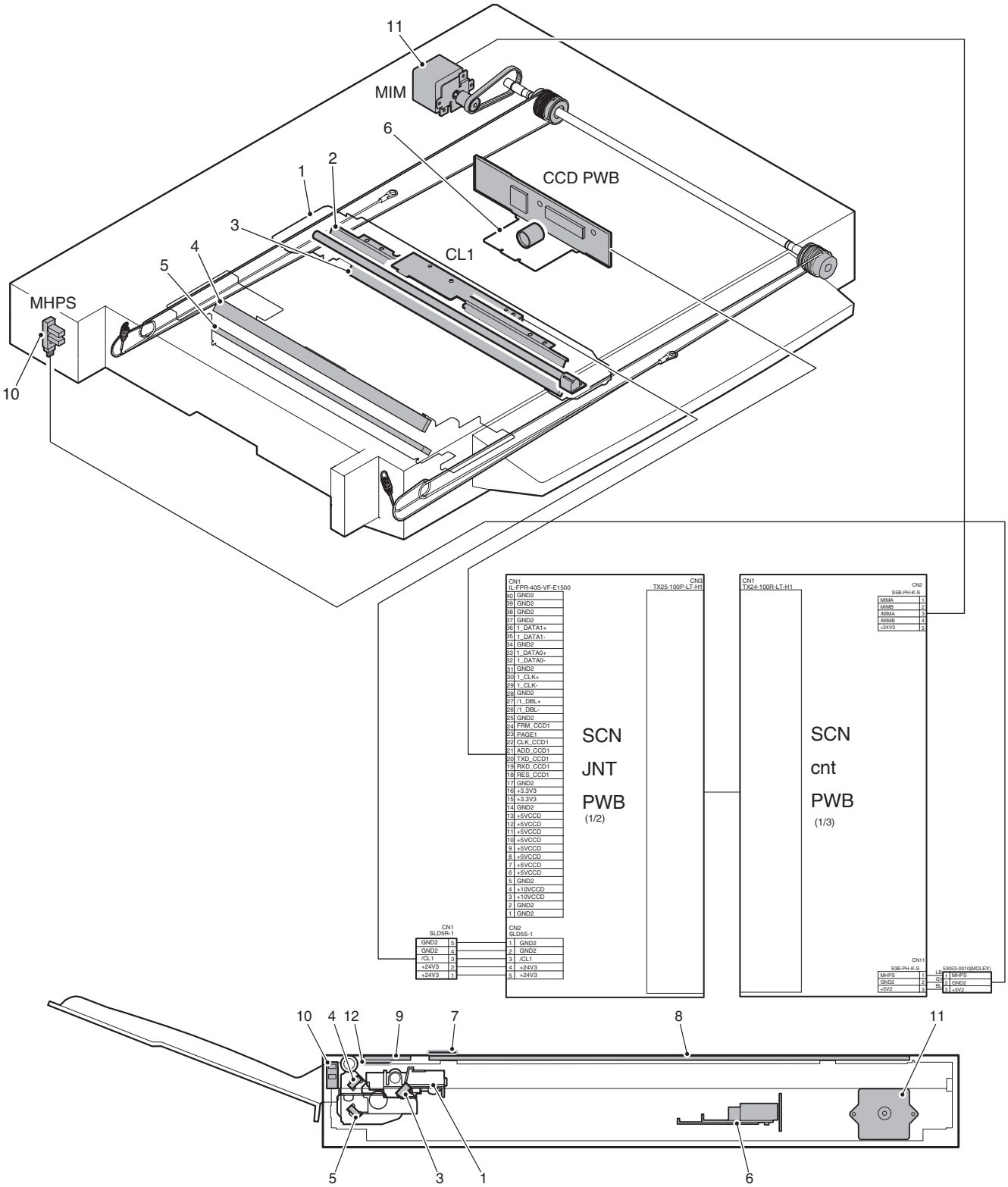

Code	Signal name	Name	Function/Operation	Type	Note
MIM	MIM	Scanner (reading) motor	Drives the scanner (reading) section.	Stepping motor	
MHPS	MHPS	Scanner home position sensor detector	Scanner home position detection	Transmission type	Sensor
CL1	CL1	Copy lamp	Document exposure lamp		
CCD PWB		CCD PWB	Front document image scan (Document table/ SPF mode) Converts the document images (optical signals) into electrical signals.		

No.	Name	Function
1	Copy lamp unit	Lights up to radiate documents. A xenon lamp (operating on 3.15KV) is employed.
2	Reflector	This mirror converges lights on documents.
3	No. 1 mirror	Secures the optical path between a document and No. 2 mirror.
4	No. 2 mirror	Secures the optical path between No. 1 mirror and No. 3 mirror.
5	No. 3 mirror	Secures the optical path between No. 2 mirror and the CCD.
6	CCD/Lens unit	The reduction optical type CCD (Charge Coupled Device) of 7,450 pixels is employed. The scan resolution is 600dpi. Converts photo energy reflected by the mirrors into electric energy.
7	White balance sheet	Serves as the reference sheet of white for scanning with the CCD/Lens unit. If dust or dirt is attached to this sheet, white streaks may be produced.
8	Table glass	A document is set on this glass. The glass surface is coated for protection against static electricity. A document is set to the top left corner.
9	SPF scan glass	The copy lamp unit is fixed, and a document is moved over this glass to scan line by line. The glass surface is coated for protection against static electricity. If dust or dirt is attached to this sheet, black streaks may be produced.
10	Mirror home position sensor (MHPS)	Detects the home position of the mirror base unit.
11	Scan motor	Drives the mirror base and the copy lamp unit.
12	DSPF white balance sheet	Serves as the reference sheet of white for scanning with the CIS unit. If dust or dirt is attached to this sheet, white streaks may be produced.

C. Operational descriptions

(1) CCD/lens unit

This machine employs the reduction optical-type line CCD (Charge Coupled Device) of scan resolution of 600dpi and 7450 pixels.

CCD scan is performed by shifting the scan positions sequentially by the carriage unit (lamp and mirror) scan or moving the document with the SPF.

Lights reflected by the document are reflected by each mirror to form images on CCD elements through the reduction-type lens. The CCD converts the optical energy into electrical energy (analog). (Photoelectric conversion)

(2) CIS unit

The image sensor which scans back document images is attached to the SPF. The close-contact type image sensor (Contact Image Sensor) with scan resolution of 600dpi and 7196 pixels is employed.

For the CIS to scan documents, the scan position is sequentially shifted by shifting the document by the SPF, and the LED light in the unit is radiated to the back of the document, and photo energy is converted into electric energy (analog signal).

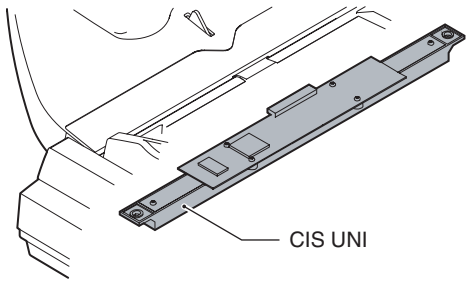

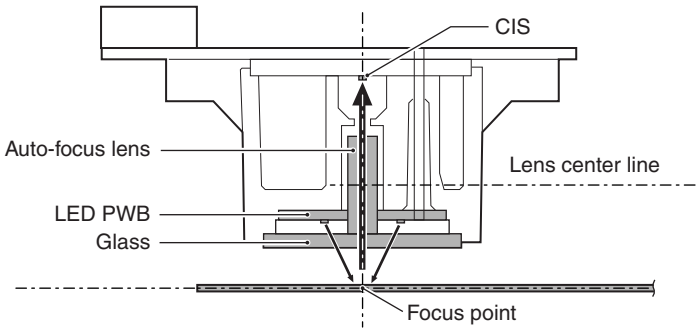

(3) Image signal flow

The image signal converted into electric energy (analog signal) is A-D converted on the CCD PWB. Image processes such as white balance and shading correction are performed on the scanner control PWB. The image signal is then sent through the mother board to the MFP control PWB.

In the MFP control PWB, image process is performed according to the setting content of the operation panel. The image data are converted into laser lighting signals (VIDEO signals), and sent through the mother PWB and the PCU to the LSU (Laser Scan Unit).

In the LSU, the VIDEO signals are converted into laser beams, which are radiated onto the drum.

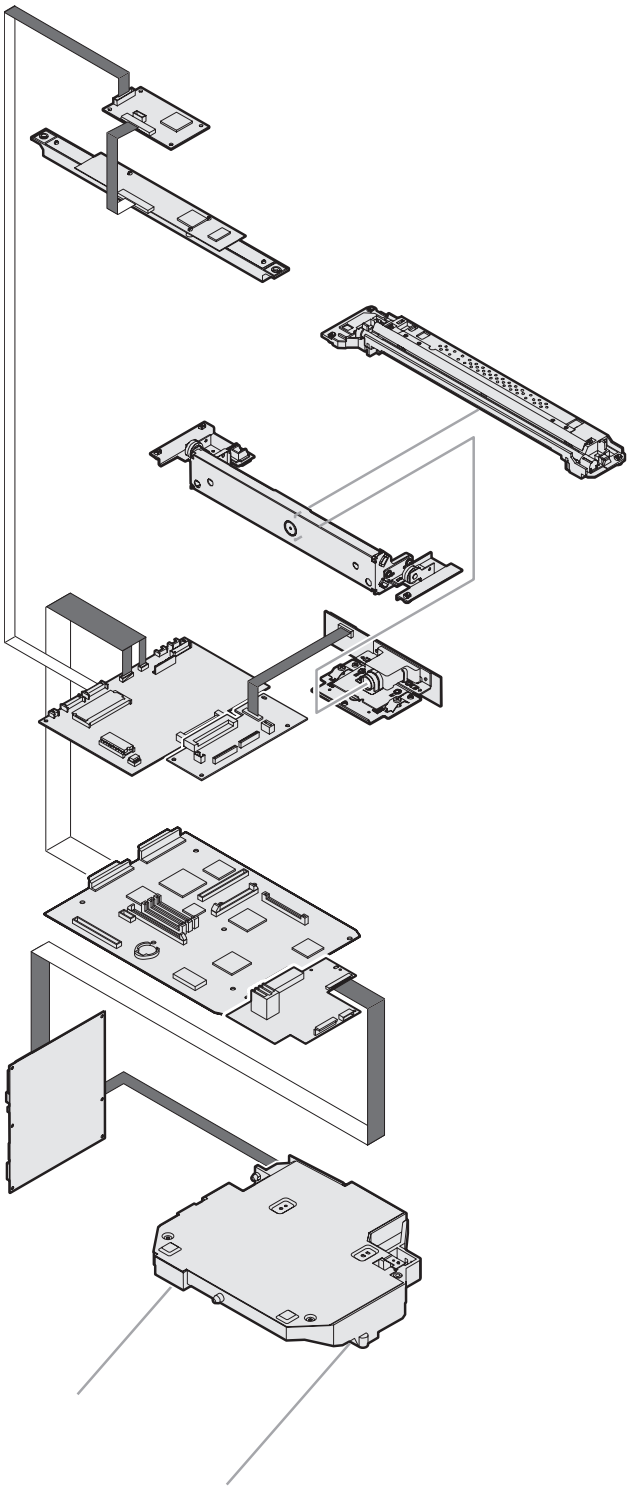

(4) Carriage (lamp unit) shift (scan) speed

The carriage scan speed depends on the copy magnification ratio.

Speed up to 171% = 110mm/s

Speed of 172% - 400% = 55mm/s

(5) Timing chart

Platen timing chart

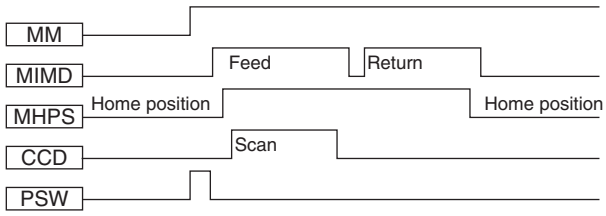

SPF duplex timing chart

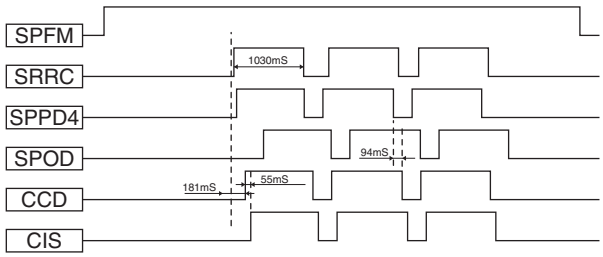

D. Maintenance and parts replacement

(1) Maintenance list

Unit name	Part name	When calling	100K	200K	300K	400K	500K	600K	700K	800K	Remark
Scanner section	Mirror/Lens/Reflector/Sensors	❍	❍	❍	❍	❍	❍	❍	❍	❍	
	Table glass/Dust-proof glass/OC	❍	❍	❍	❍	❍	❍	❍	❍	❍	
	White reference glass	❍	❍	❍	❍	❍	❍	❍	❍	❍	
	Rails		☆	☆	☆	☆	☆	☆	☆	☆	
	Drive belt/Drive wire/Pulley		×	×	×	×	×	×	×	×	

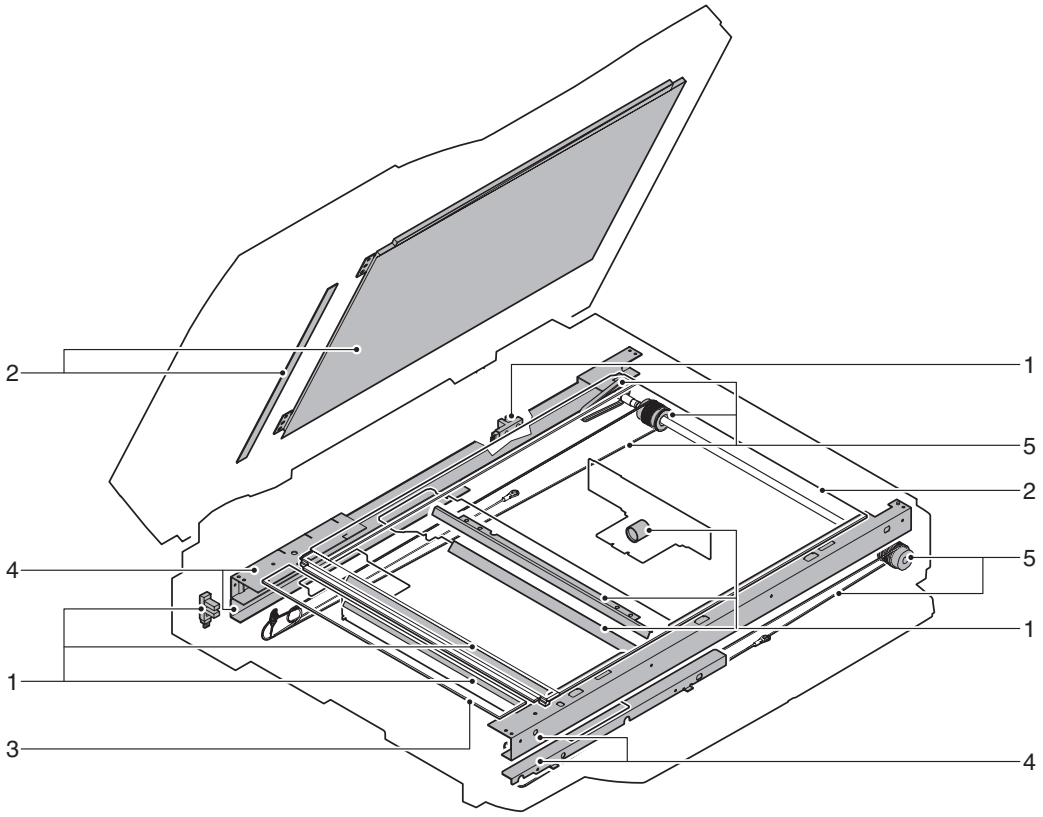

(2) Maintenance and parts replacement

No.	Unit	Parts		
a	Scanner unit	1	OC	❍
		2	Dust-proof glass	❍
		3	Table glass	❍
		4	White reference glass	❍
		5	Mirror	❍
		6	Rails	☆
		7	Drive wire	×
		8	Pulley	×
		9	Drive belt	×
		10	Scan motor	
		11	OC open sensor	
		12	Mirror home position sensor	
		13	Scanner control PWB	
		14	Scanner interface PWB	
b	Lamp unit	1	Reflector	❍
		2	Mirror	❍
		3	Lamp	
		4	Inverter PWB	
c	CCD lens PWB unit	1	CCD lens	

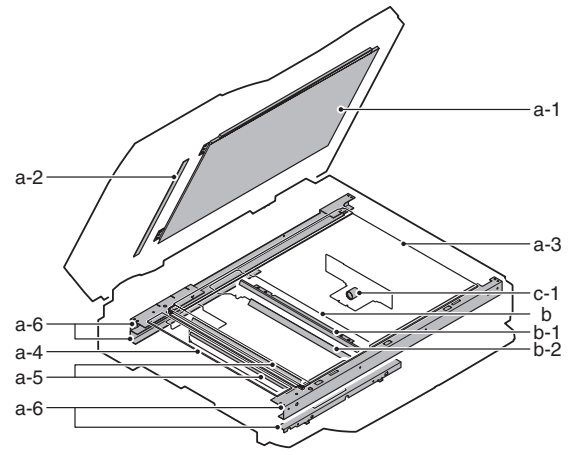

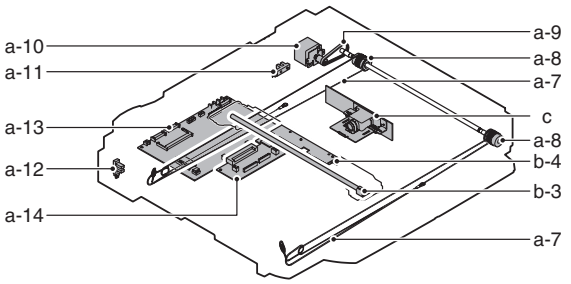

a. Scanner unit

a-1. OC

1) Remove the OC cover.

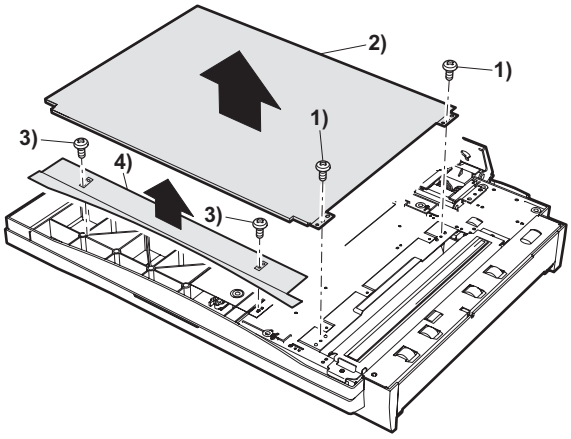

a-2. Dust-proof glass

a-3. Table glass

a-4. White reference glass

1) Remove the table glass holder and the white reference glass holder, and remove the table glass and the white reference glass.

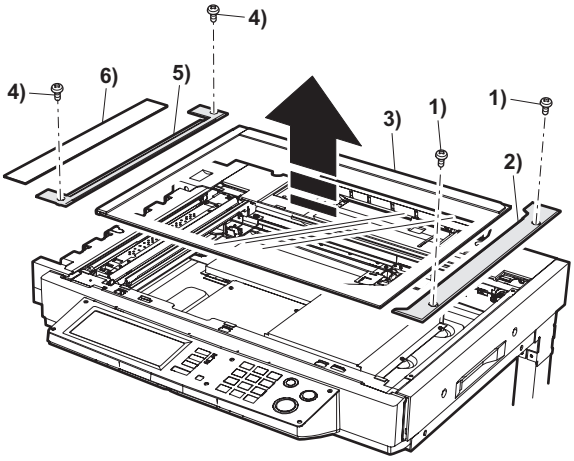

a-5. Mirror

1) Remove the table glass.
2) Clean mirror.

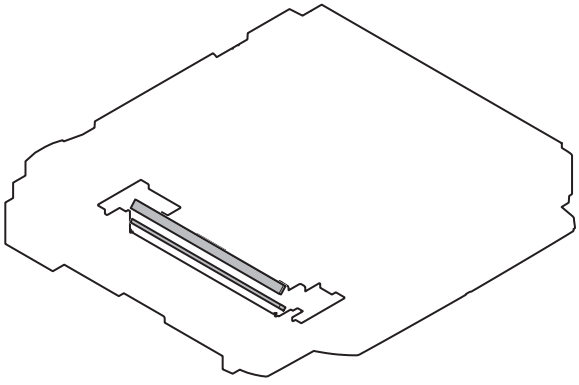

a-6. Rails

1) Remove the table glass.
2) Grease up the rails.

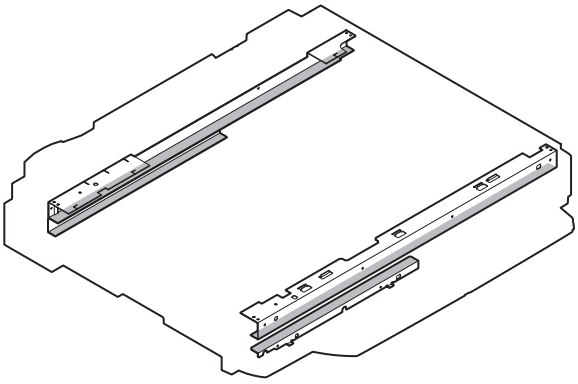

a-7. Drive wire

a-8. Pulley

a-9. Drive belt

1) Remove the table glass.
2) Check the drive wire, pulley and drive belt.

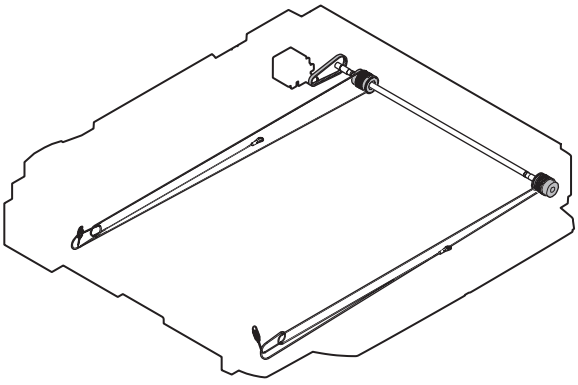

a-10. Scan motor

1) Remove the scanner rear cabinet and the rear lower cabinet.

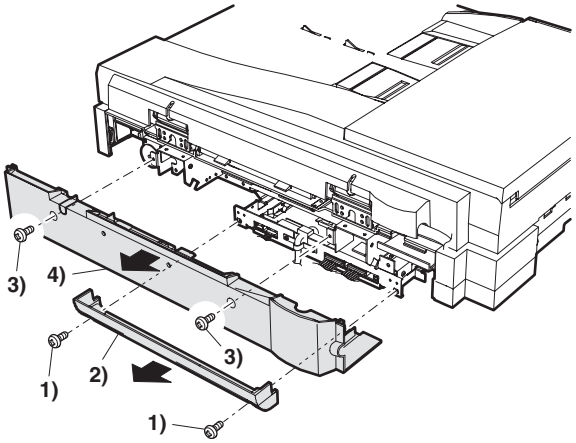

2) Pull out the harness from the scanner control PWB.
3) Remove the scan motor.

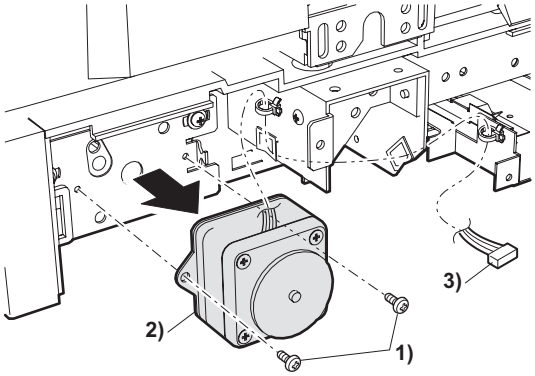

a-11. OC open sensor

1) Remove the rear cabinet.
2) Remove the OC open sensor.

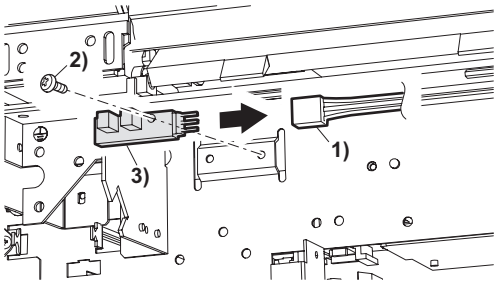

a-12. Mirror home position sensor

1) Remove the rear cabinet.
2) Remove the mirror home position sensor.

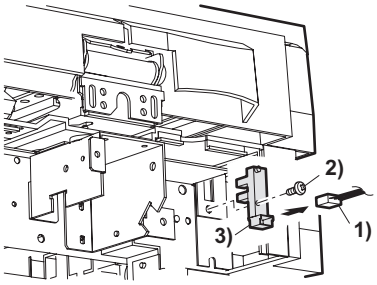

a-13. Scanner control PWB

1) Remove the scanner rear lower cabinet.
2) Disconnect the connector and earth band, and pull out the scanner control PWB.

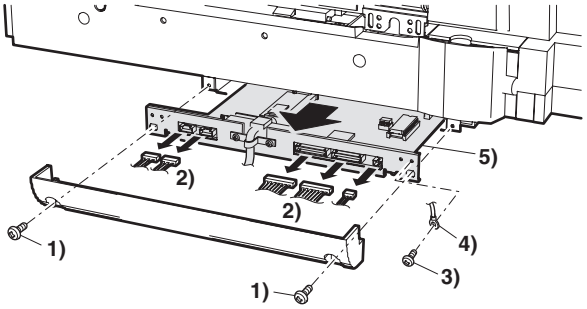

∗ When the scanner control PWB is replaced, the EEPROM must be replaced.

a-14. Scanner interface PWB

1) Remove the table glass.
2) Remove the PWB cover and the harness cover.

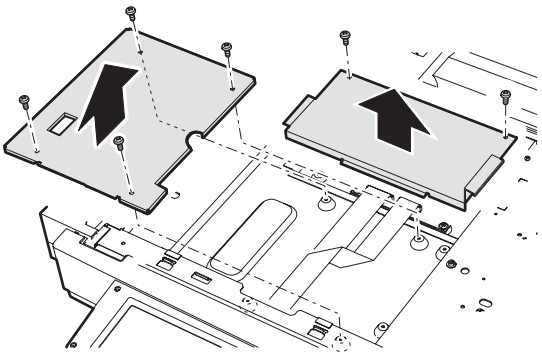

3) Remove the scanner interface PWB.

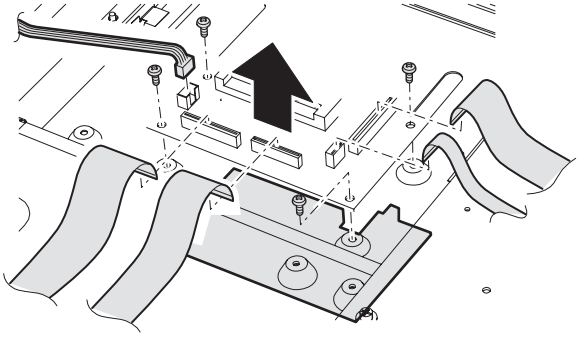

b. Lamp unit

1) Remove the table glass.
2) Remove the scan lamp unit.

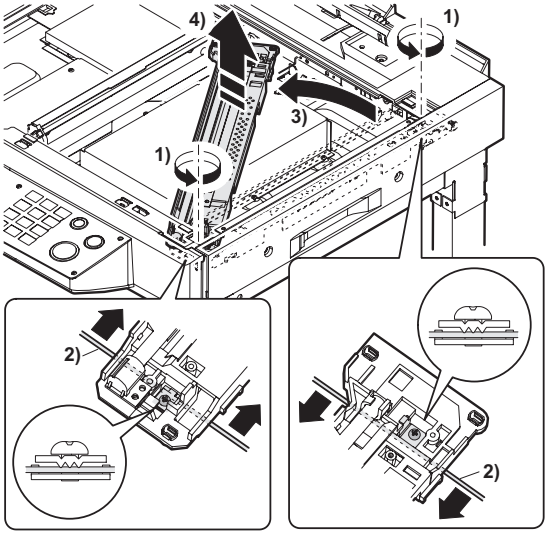

b-1. Reflector

b-1. Mirror

1) Remove the table glass.
2) Clean the reflector and the mirror.

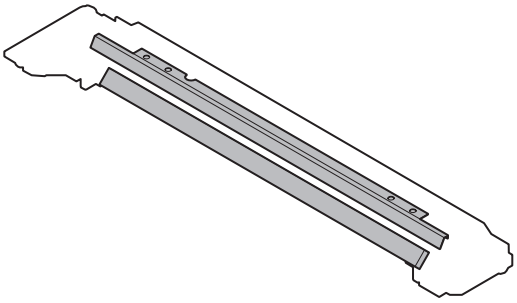

b-3. Lamp

1) Remove the table glass.
2) Slide the lamp unit base to the notch section.

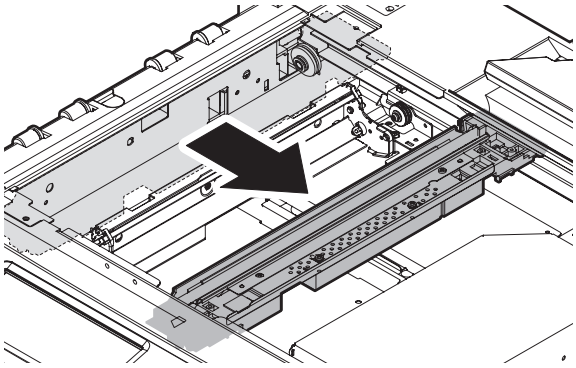

3) Flip the notch section Mylar and remove the screw. Slide the lamp holder to the front side, and remove it upward from the rear side. Remove the connector.

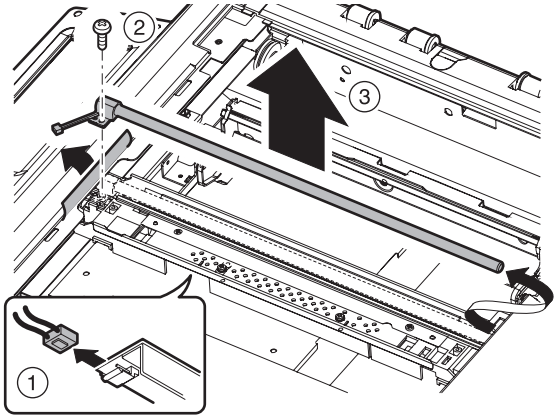

b-4. Inverter PWB

1) Remove the table glass.
2) Hold with your hand and remove the screw. Remove the connector and remove the inverter PWB.

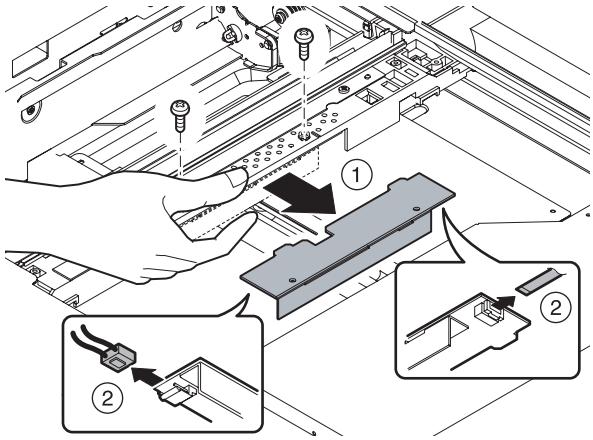

c. CCD lens PWB unit

1) Remove the table glass.
2) Remove the dark-box cover.

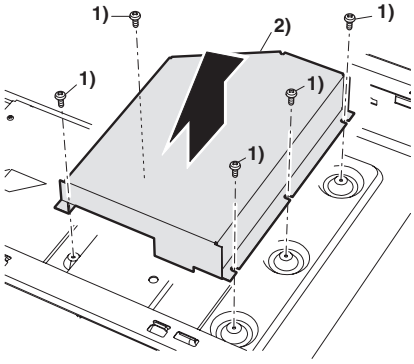

3) Remove the CCD lens PWB unit.

Note: The CCD lens PWB unit is factory-adjusted before shipping.
Since these adjustments cannot be performed in the market.
Never touch the screws other than screw 2) of the CCD lens PWB unit.

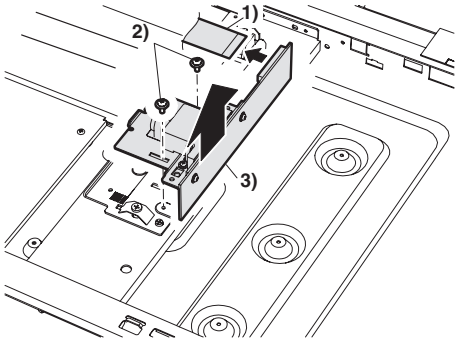

Note for CCD lens PWB unit installation

<1> Adjust the CCD unit adjustment value listed in the table below with the scribed line on the lens base.

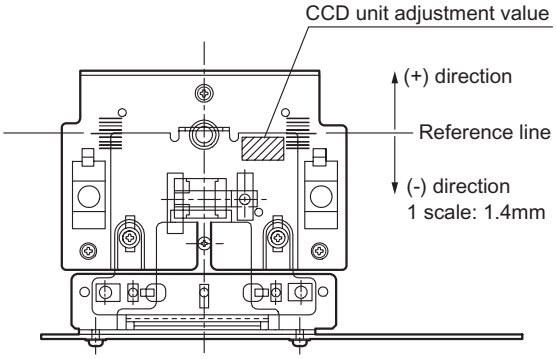

	CCD adjustment value
+4 scales	5.0~
+3 scales	3.6~4.9
+2 scales	2.2~3.5
+1 scale	0.8~2.1
Reference	-0.6~0.7
-1 scale	-2.0~ -0.7
-2 scales	-3.4~ -2.1
-3 scales	-4.8~ -3.5
-4 scales	~ -4.9

<2> Make a sample copy at the above position, and measure the magnification ratio.

<3> Change the installing position in the horizontal direction to adjust the magnification ratio.

- When the copy image is longer than the original, shift to the positive (+) direction.
- When the copy image is shorter than the original, shift to the negative (-) direction.

∗ 1 scale of the scribed line corresponds to 0.3% of magnification ratio.

∗ If this adjustment is not satisfactory, make a fine adjustment with SIM 48-1.
(Refer to the adjustment described below.)

c-1. CCD lens

1) Remove the table glass.
2) Remove the dark-box cover.
3) Remove the lens cover.

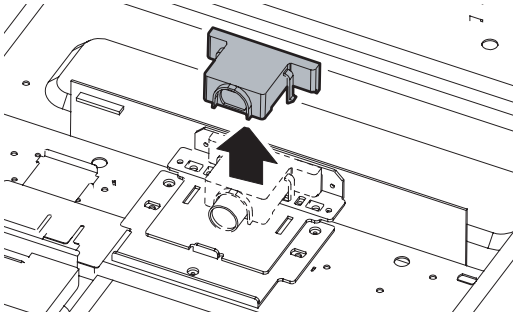

4) Clean the CCD lens and the CCD.

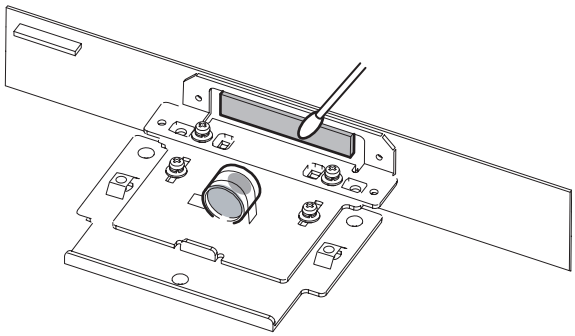

7. DSPF section

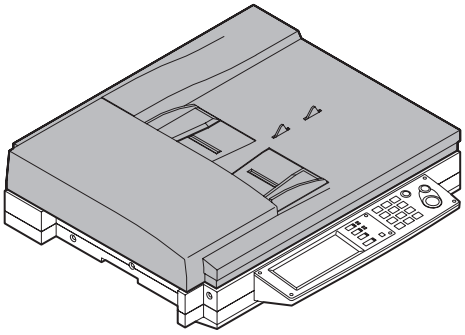

A. General

Sheet documents are automatically fed and transported for continuous scanning.

The DSPF (AR-EF3) supports duplex sheet to scan both of the front and the back surfaces at a time.

B. Major parts and signal functions

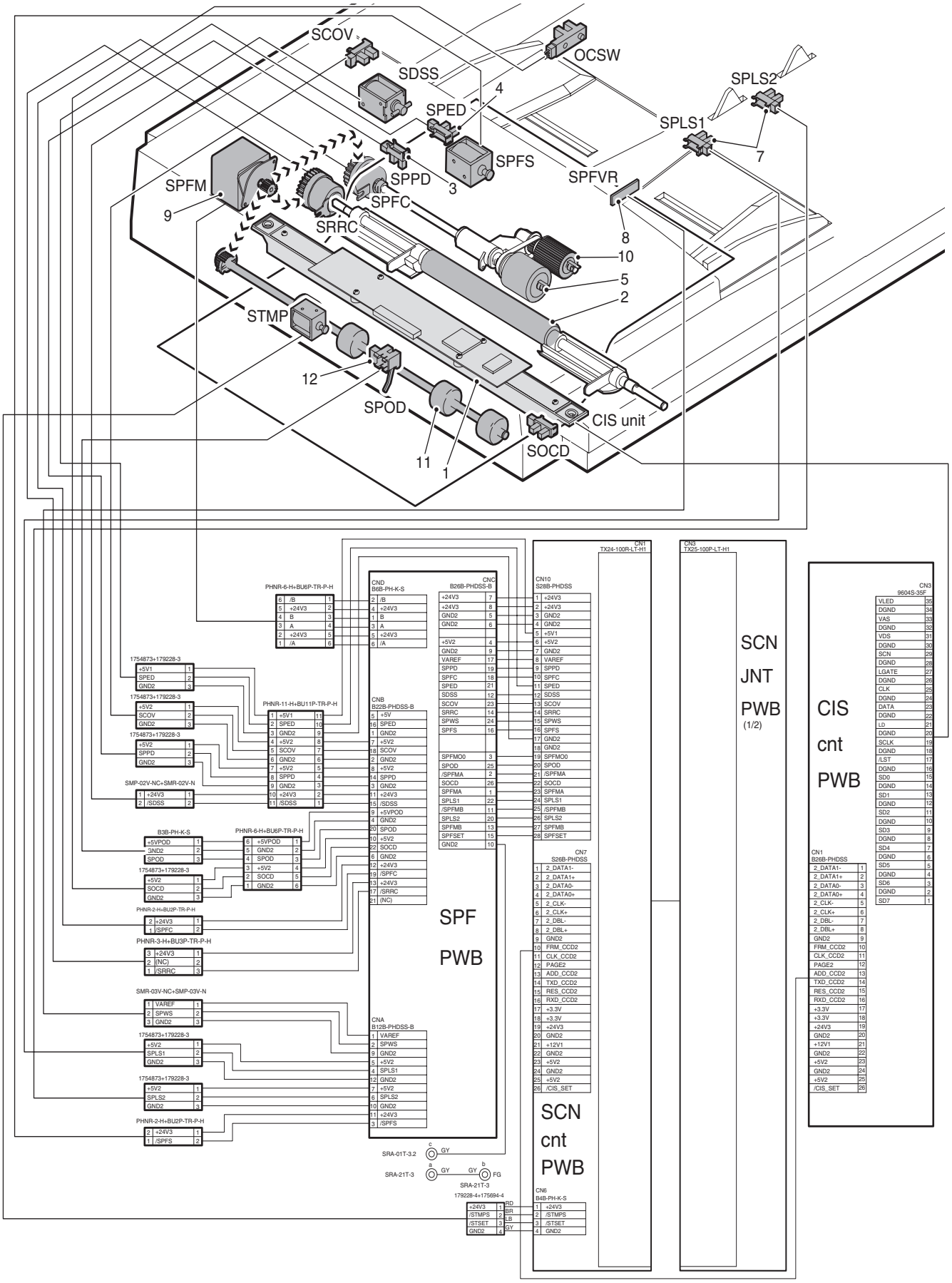

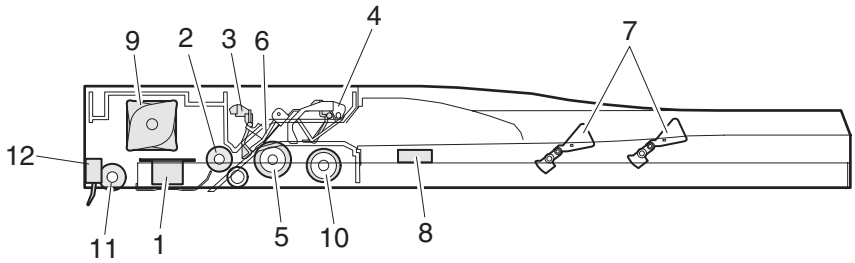

Code	Signal name	Name	Function/Operation	Type	Note
SCOV	SCOV	SPF cover switch	SPF cover open/close detection	Transmission type	Sensor
SPFM	SPFM1	SPF paper feed motor, paper transport motor	Drives the paper feed roller and the transport roller. (SPF)	Stepping motor	
SPFC	SPFC	SPF paper feed clutch	SPF paper feed section roller ON/OFF control	Electromagnetic clutch	
SRRC	SRRC	SPF resist roller clutch	SPF resist roller ON/OFF control	Electromagnetic clutch	
SPED	SPED	SPF document set detector	SPF document presence detection	Transmission type	Sensor
SPPD	SPPD	SPF document paper pass detector	SPF document paper pass detection 1	Transmission type	Sensor
SPFS	SPFS	SPF document pickup solenoid	SPF document pickup	Solenoid	
STMP	STMP	FAX finish stamp solenoid	Drives the FAX document finish stamp.	Solenoid	
SPLS1	SPLS1	SPF document length detector 1	SPF document length detection (Short)	Transmission type	Sensor
SPLS2	SPLS2	SPF document length detector 2	SPF document length detection (Long)	Transmission type	Sensor
SPFVR	SPFVR	SPF document size (Width) detection analog data detector	SPF document size (Width) detection	Volume resistor	Other detector
SOCD	SOCD	SPF open/close detector	SPF unit open/close detection	Transmission type	Sensor
SPOD	SPOD	SPF paper exit detector	SPF paper exit detection	Transmission type	Sensor

No.	Name	Function
1	CIS unit (AR-EF3 only)	This is an image sensor unit to scan the back of a document. An image sensor (CIS: Contact Image Sensor) of 7,196 pixels is employed. The scan resolution is 600dppi.LED lights in the unit are reflected onto the document. Lights reflected from the document are passed through the lens to form images on the photoelectric conversion elements. The photo energy is converted into electric energy.
2	Document resist roller	This roller makes synchronization between the document lead edge and the scan start position.
3	Document resist front sensor (SPPD)	Detects that a document reaches the resist roller.
4	Document set sensor	Detects that a document is set on the tray.
5	Document feed roller	Feeds documents.
6	Separation plate	The rubber plate prevents against duplicated feed of documents.
7	Document length sensor (SPLS1/SPLS2)	Detects the document length to detect the document size.
8	Document width detection volume	Detects the document width to detect the document guide.
9	SPF motor	Transports a document in the SPF.
10	Document take-up roller	Picks up a document and transport it to the document feed roller.
11	Document exit roller	Discharges a document.
12	Document exit sensor (SPOD)	Detects document exit.

C. Operational descriptions

(1) Document feed, transport, scan, paper exit, and operating speed

The document fed by the take-up roller is sent through the paper feed roller and the transport roller to the resist roller section.

In the resist roller section, the document lead edge and the scan start position are synchronized. The document is transported to the scan section. After being scanned, the document discharged to the document exit tray by the paper exit roller.

The document transport speed varies depending on the scan mode and the scan magnification ratio as shown below.

Scan mode	Magnification ratio	Document transport speed
Single surface scan/ Duplex scan	100% or above	220mm/sec
Single surface scan/ Duplex scan	101% or above	110mm/sec
	High image quality	110mm/sec
	FAX	167.1mm/sec

D. Maintenance and parts replacement

(1) Maintenance list

Unit name	No.	Part name	When calling	100K	200K	300K	400K	500K	600K	700K	800K	Remark
DSPF section	1	Pick-up roller	❍	❍	❍	❍	❍	❍	❍	❍	❍	Note 2
	2	Paper feed roller	❍	❍	❍	❍	❍	❍	❍	❍	❍	Note 2
	3	Separation mylar lower	❍	❍	❍	❍	❍	❍	❍	❍	❍	Note 2
	4	Separation pad	❍	❍	❍	❍	❍	❍	❍	❍	❍	Note 2
	5	PS roller	❍	❍	❍	❍	❍	❍	❍	❍	❍	
	6	Paper exit roller	❍	❍	❍	❍	❍	❍	❍	❍	❍	
	7	Sensors		❍	❍	❍	❍	❍	❍	❍	❍	For cleaning, blow air.

Note 2: Replacement reference: Replace by using the SPF counter value as an indication.
Paper feed section pickup roller, paper feed roller, separation pad, separation lower mylar lower:
100K or 1 year

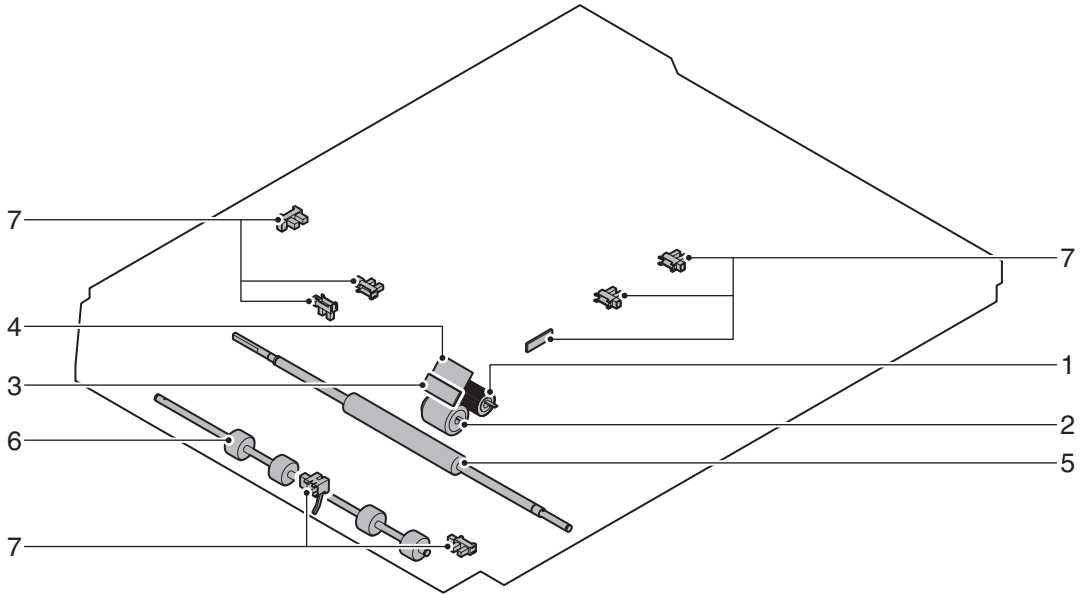

(2) Maintenance and parts replacement

No.	Unit	Parts		
a	SPF unit	1	SPF document stopper solenoid	
		2	SPF document resist front sensor	
		3	SPF paper feed cover sensor	
		4	SPF document set sensor	
		5	SPF control PWB	
		6	SPF original length sensor 1	
		7	SPF original length sensor 2	
		8	SPF original width detection volume PWB	
		9	Pick-up roller	❍
		10	Paper feed roller	❍
		11	CIS unit	
		12	CIS control PWB	
		13	SPF open sensor	
		14	SPF original exit sensor	
		15	Paper exit roller	❍
		16	SPF motor	
		17	Resist roller	
		18	Resist roller clutch	
		19	SPF original paper feed solenoid	
		20	SPF original paper feed clutch	
		21	Separation mylar lower	❍
		22	Separation pad	❍

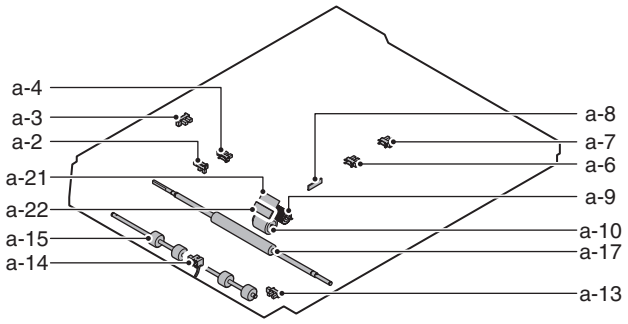

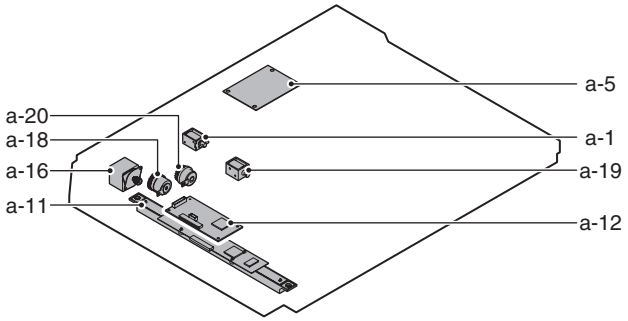

a. SPF unit

1) Remove the rear cabinet of the scanner section.
2) Disconnect the connector.
3) Disconnect the grounding wire.

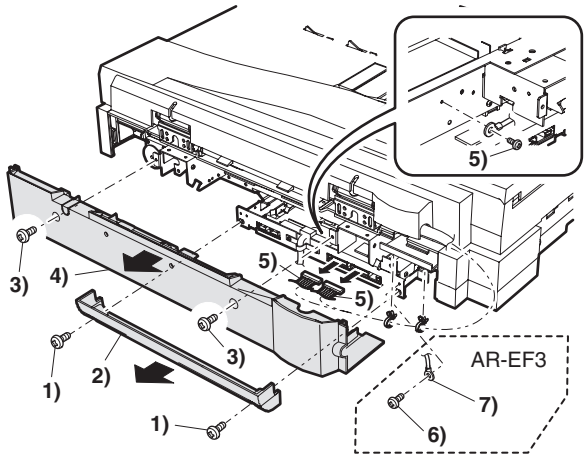

4) Slide the SPF unit to the bottom, then remove it.

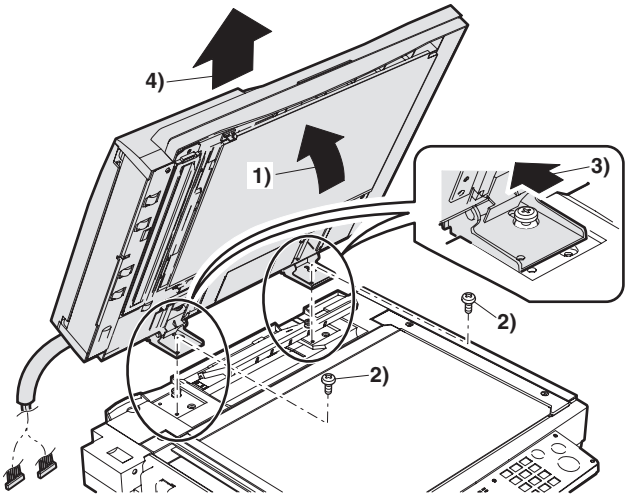

a-1. SPF document stopper solenoid

1) Remove the upper transport unit cover.

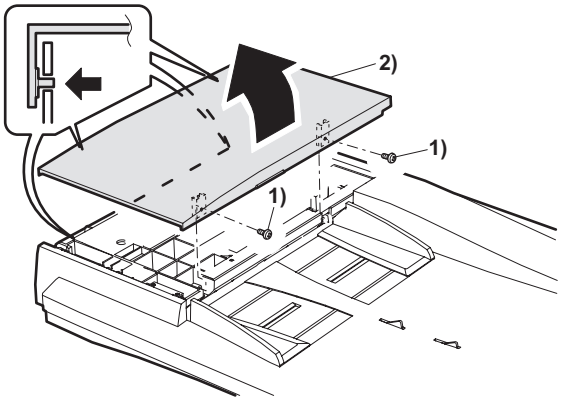

2) Remove the stopper solenoid.

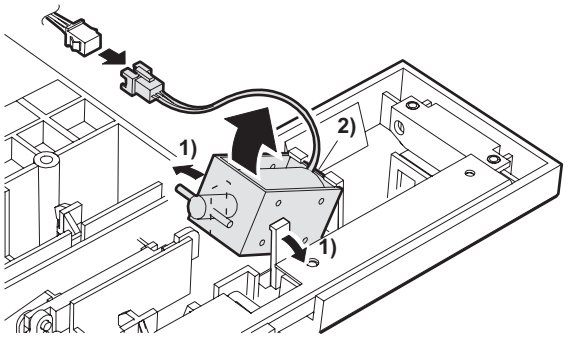

a-2. SPF document resist front sensor

a-3. SPF paper feed cover sensor

a-4. SPF document set sensor

1) Remove the upper transport unit cover.
2) Remove the sensors.

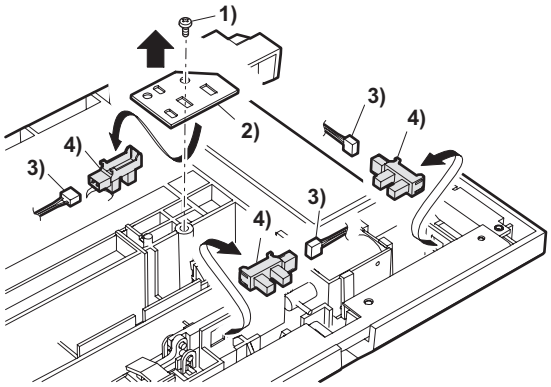

a-5. SPF control PWB

1) Remove the SPF PWB, and remove the SPF control PWB.

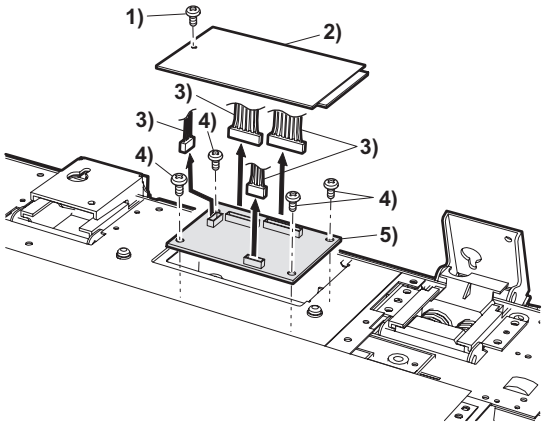

a-6. SPF original length sensor 1

a-7. SPF original length sensor 2

1) Remove the OC cover.

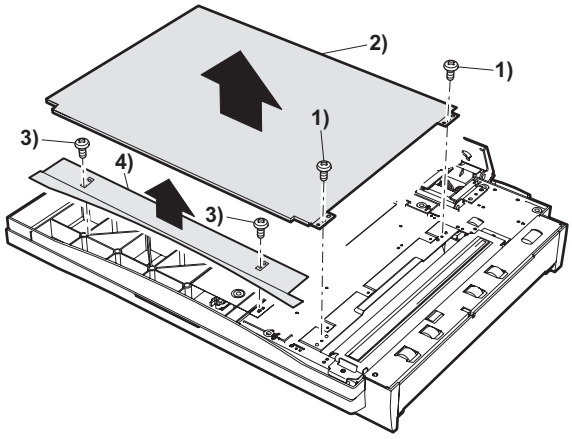

2) Remove the original length sensor cover, and remove the sensor.

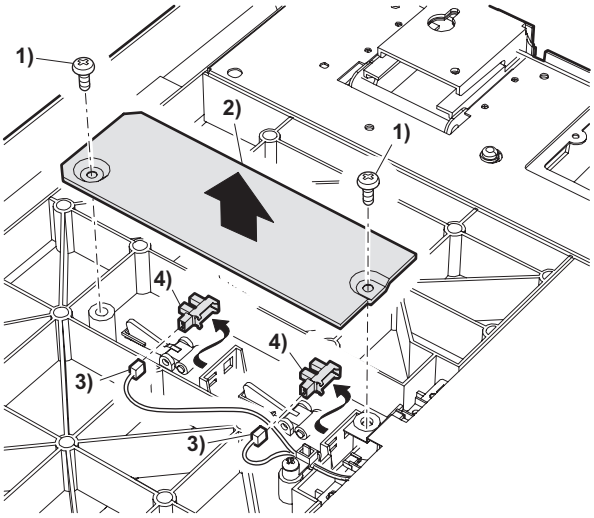

a-8. SPF original width detection volume PWB

1) Remove the OC cover.
2) Remove the original length sensor cover.
3) Remove the volume cover and remove the volume.

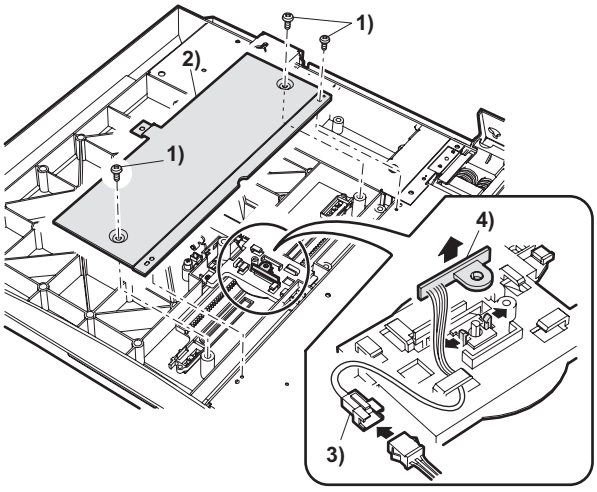

(SPF original width detection volume installation)

<1> Extend the original guide to the maximum position.

<2> Adjust so that the mark on the width detection pinion gear is fitted with the mark on the volume mounting plate.

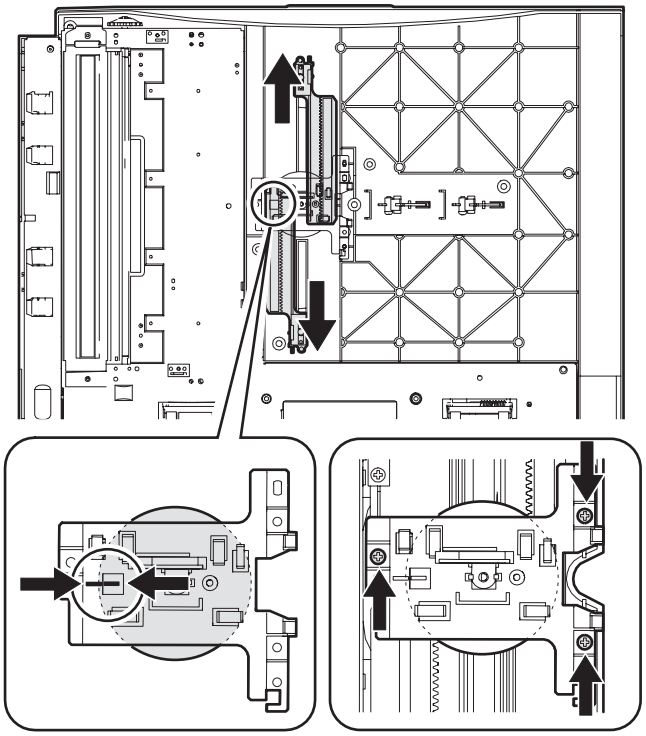

<3> Fix the mounting plate with the screw.

∗ When the rotational volume sensor is replaced, the sensor value must be adjusted to the paper size (mark on the tray). (Refer to the SIM 53-6 or 53-7.)

a-9. Pick-up roller

a-10. Paper feed roller

1) Remove the upper transport unit cover.
2) Remove the paper feed roller cover.
3) Remove the hook of each roller, and remove each roller.

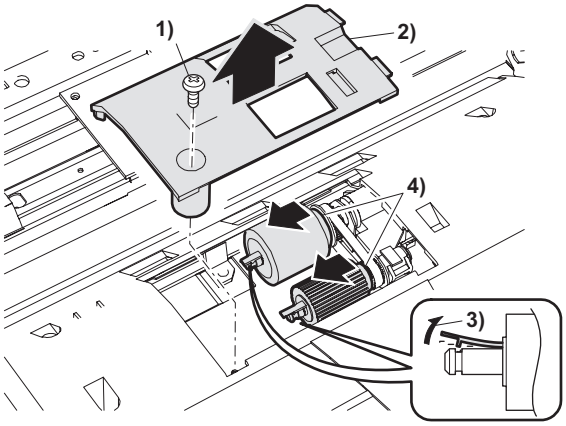

a-11. CIS unit

a-12. CIS control PWB

1) Remove the upper transport unit cover.
2) Remove the CIS unit.

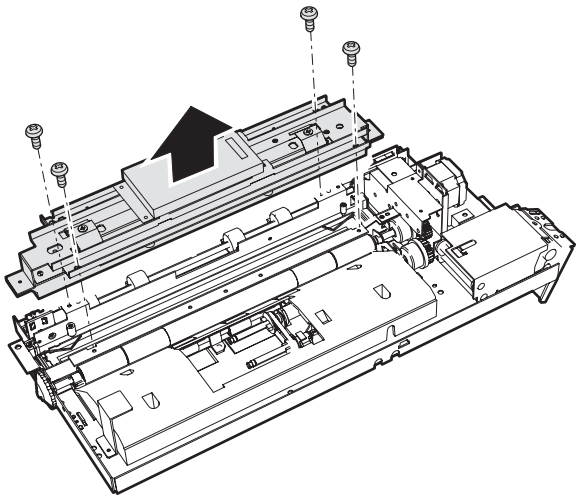

∗ When the CIS unit is replaced, the CIS shading adjustment must be performed. (Refer to the descriptions of ADJUSTMENTS.)

3) Remove the harness, the cover, the earth wire, and remove the CIS control PWB.

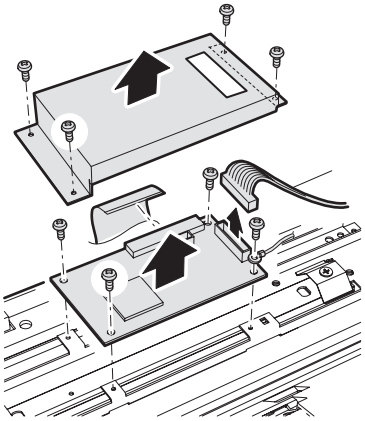

For easy installation of the cover, slide the earth line to the connector side when attaching.

Note: The CIS unit is factory-adjusted before shipping. Since these adjustments cannot be performed in the market, never touch the following screws of the CIS unit.

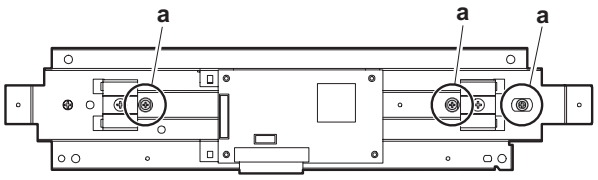

a-13. SPF open sensor

1) Remove the open sensor.

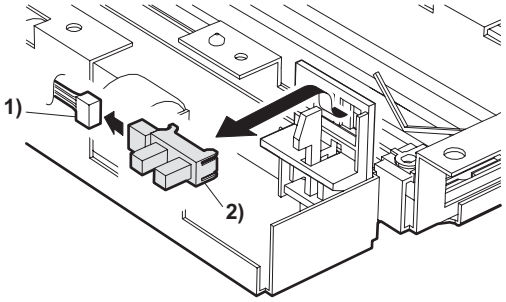

a-14. SPF original exit sensor

1) Remove the paper exit sensor.

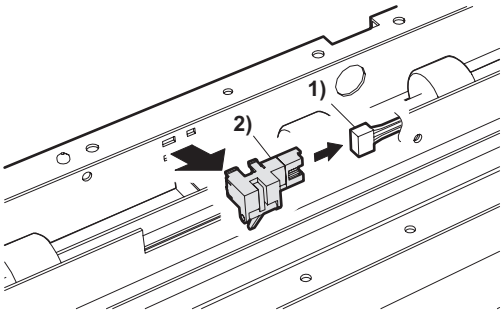

a-15. Paper exit roller

1) Remove the original paper feed unit.
2) Remove the paper exit roller gear.

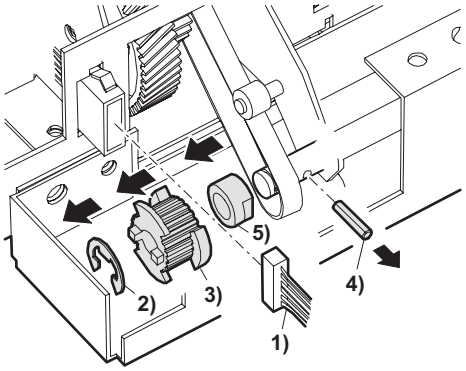

3) Remove the paper exit frame, and remove the paper exit roller.

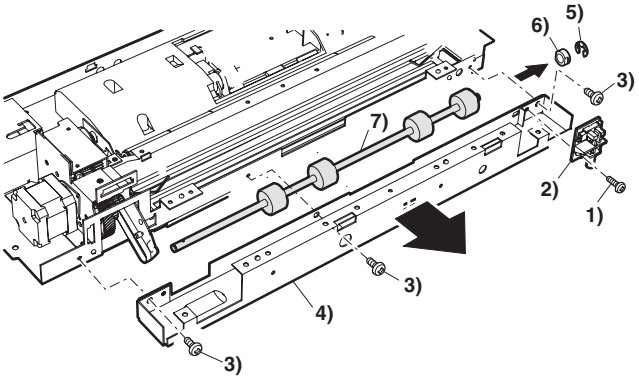

a-16. SPF motor

1) Remove the OC cover.
2) Remove the SPF lower cover.

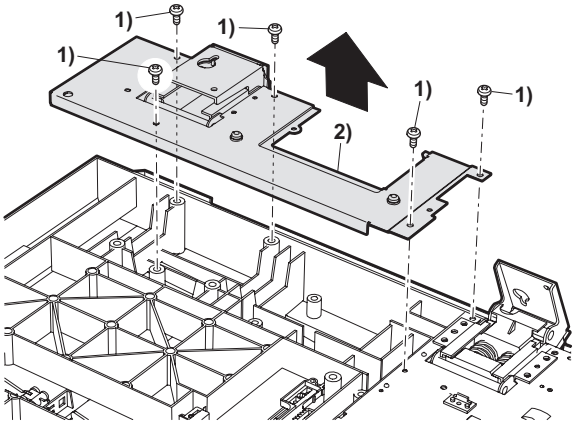

3) Remove the original paper feed unit.

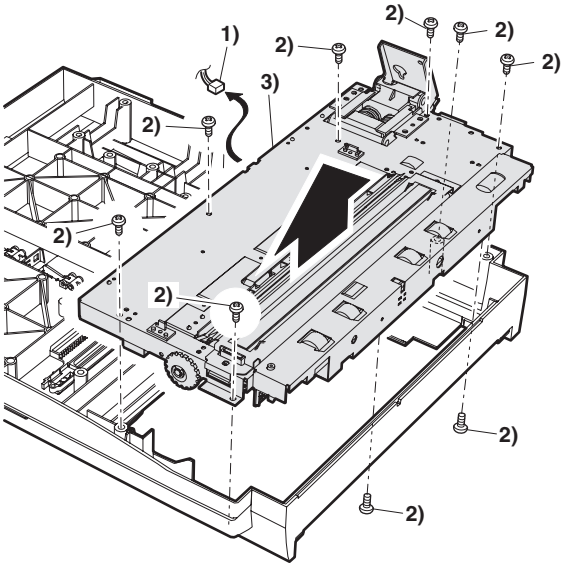

4) Remove the SPF drive unit.

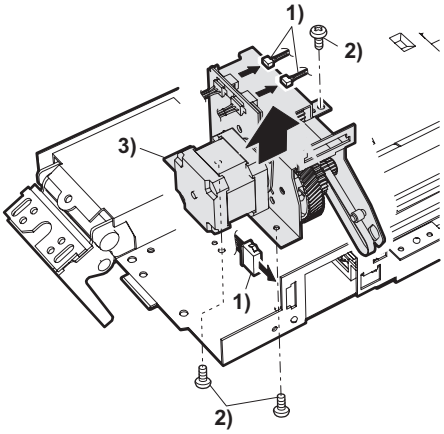

5) Remove the SPF motor.

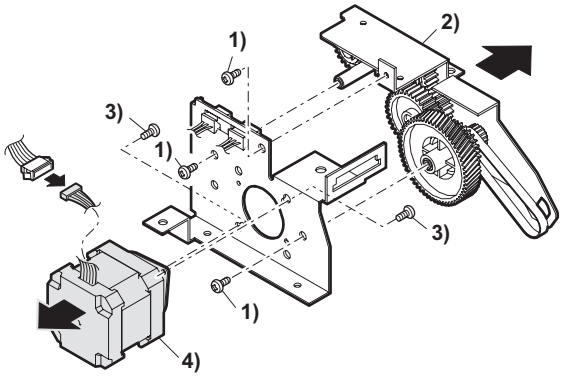

a-17. Resist roller

a-18. Resist roller clutch

1) Remove the SPF resist roller unit.

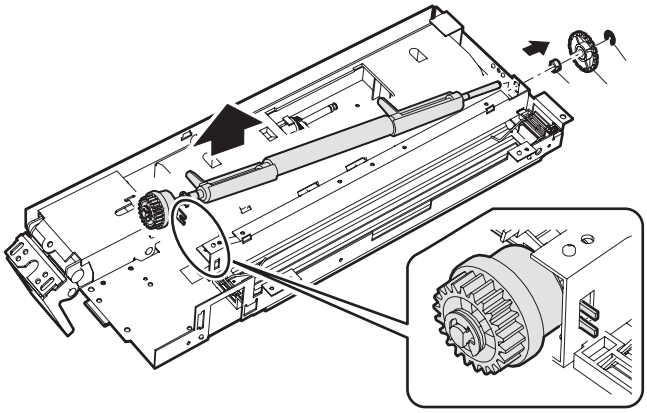

2) Remove the SPF resist roller and the SPF resist roller clutch.

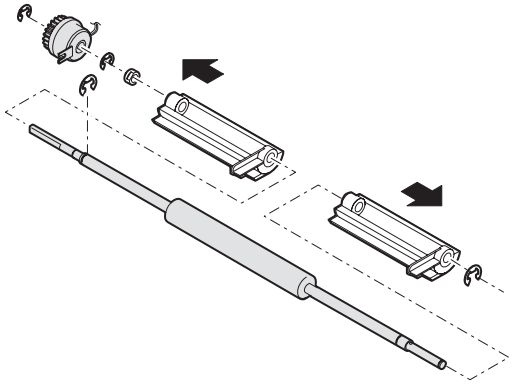

a-19. SPF original paper feed solenoid

a-20. SPF original paper feed clutch

1) Remove the SPF paper feed unit.
2) Remove the SPF paper guide.

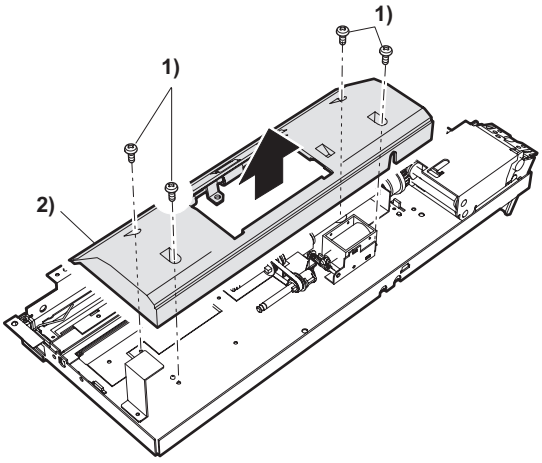

3) Remove the SPF pickup unit.

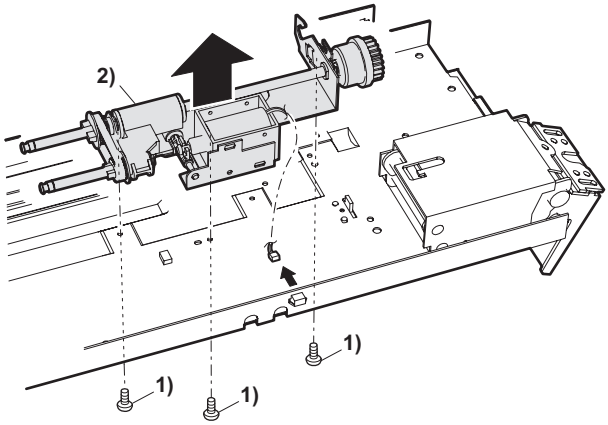

4) Remove the original paper feed solenoid and the SPF original paper feed clutch.

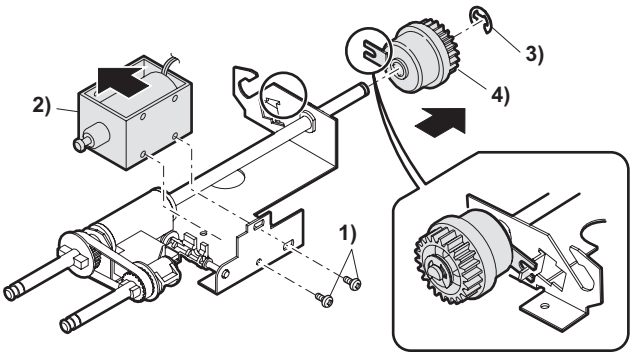

a-21. Separation mylar lower

a-22. Separation pad

1) Remove the upper transport unit.
2) Loosen the screw, and remove the separation pad unit.

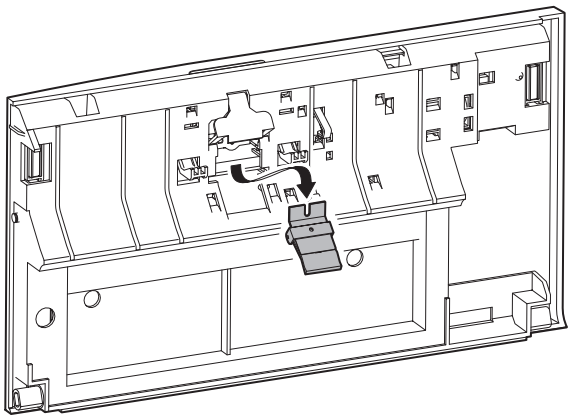

3) Remove the screw, and remove the separation plate and the front separation plate.
4) Remove the separation Mylar lower, and the separation pad.

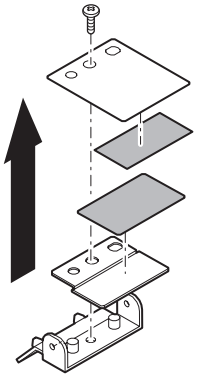

8. Operation panel section

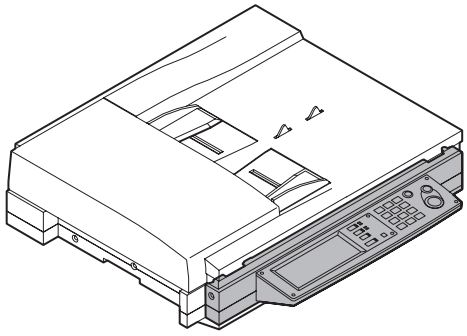

A. General

This section describes various types of settings, display and operation.

The LCD display section is controlled by the MFP CONTROL PWB.

The touch panel, operation keys and LED display are controlled by the SCANNER CONTROL PWB.

B. Major parts and signal functions

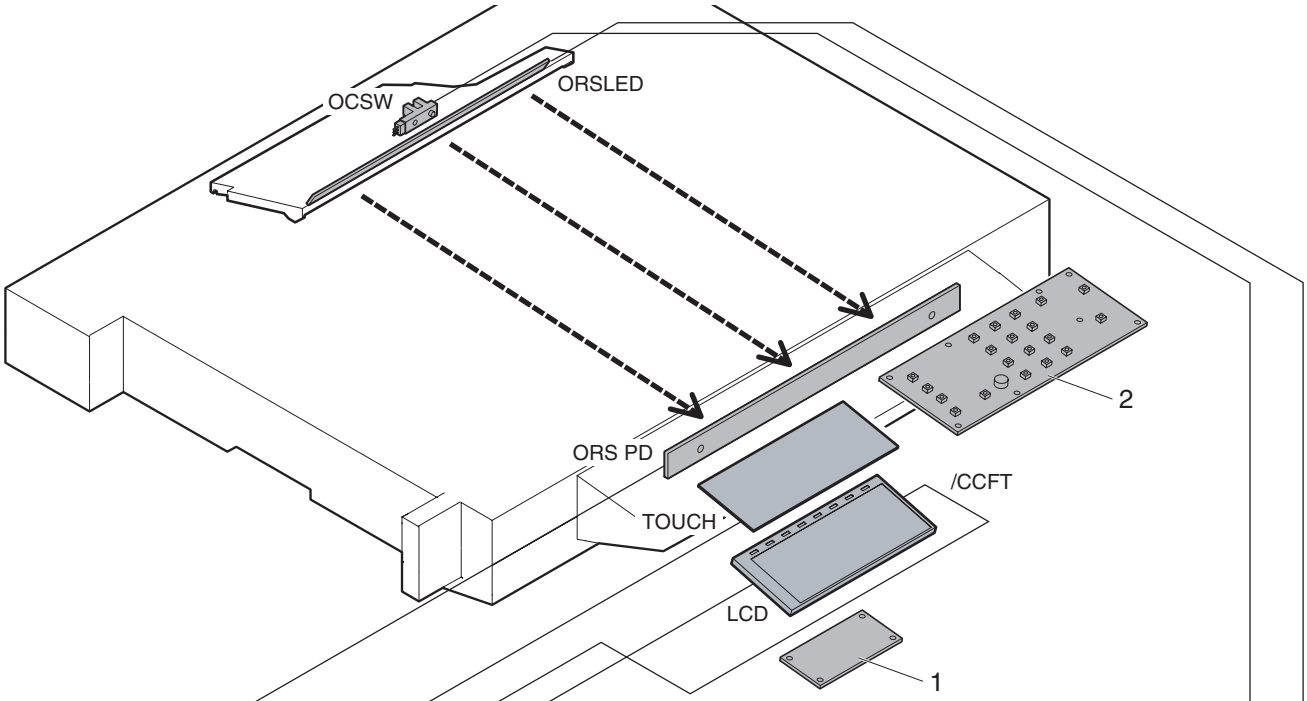

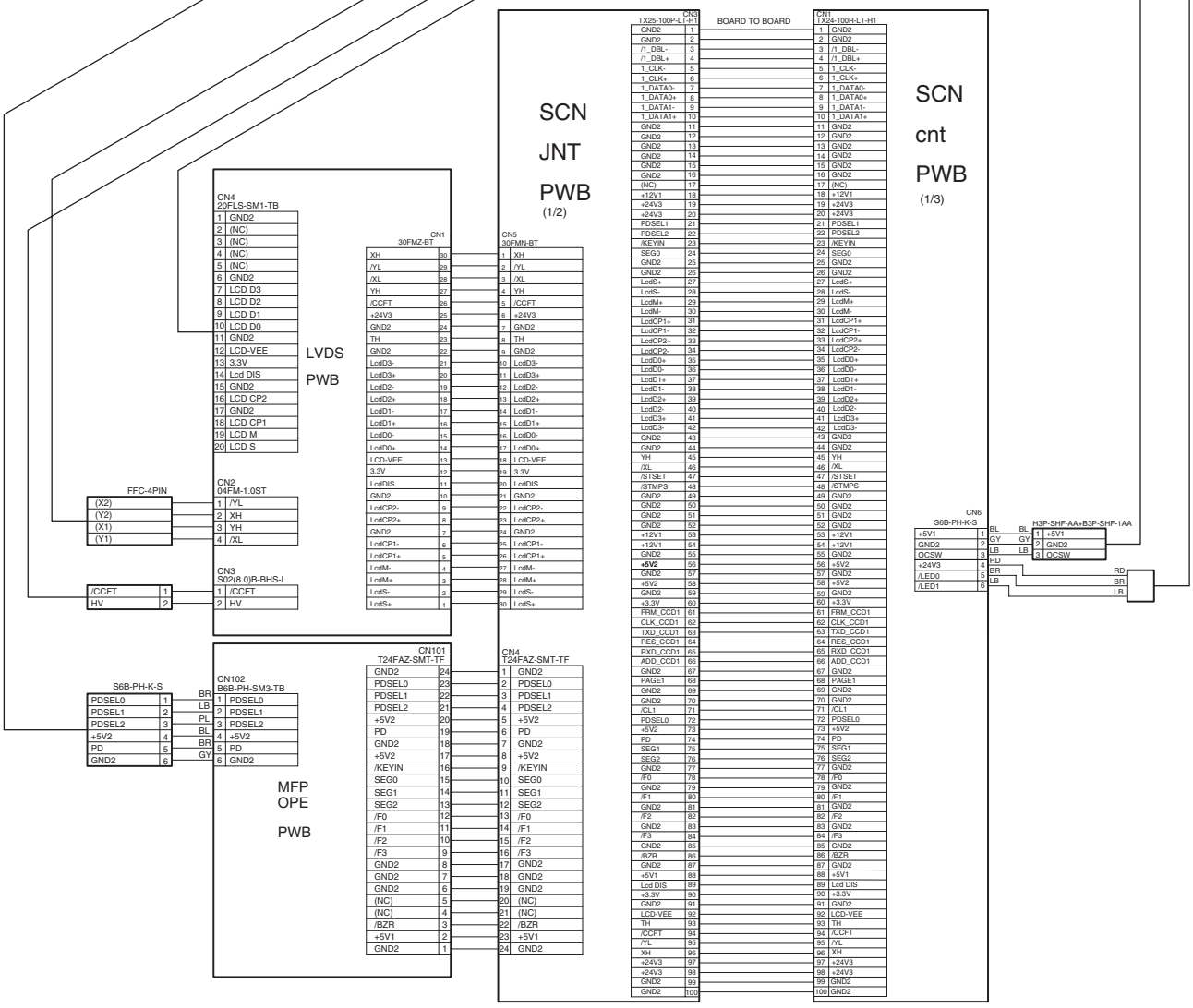

Code	Signal name	Name	Function/Operation	Type	Note
LCD		LCD unit	Display the each memu and the information.		
TOUCH		Touch panel	Various adjustments and setting operation are performed.		
ORSLED		Document size detection light emitting PWB	Generates the document size detection signal.		
ORSPD		Document size detection light receiving PWB	Generates the document size detection signal.		
OCSW	OCSW	SPF open/close detector	Document size detection trigger	Transmission type	Sensor
/CCFT	/CCFT	LCD backlight	LCD backlight	CCFT cool CRT	

No.	Name	Function
1	LVDS/INV PWB	Generates the LCD display signal and a high voltage for the backlight.
2	Operation control PWB	Controls the display operation panel.

C. Maintenance and parts replacement

No.	Unit	Parts	
a	Original detection unit	1	Original size detection PWB (Light emitting side)
		2	Original size detection PWB (Light receiving side)
b	Operation panel unit	1	LVDS PWB
		2	MFP operation PWB

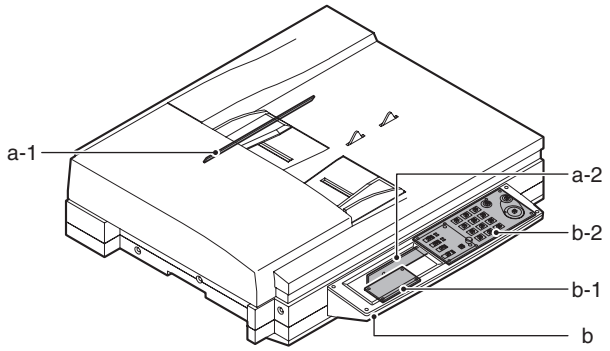

a. Original detection unit

a-1. Original size detection PWB (Light emitting side)

1) Remove the rear cabinet.
2) Remove the original detection unit (Light emitting side).

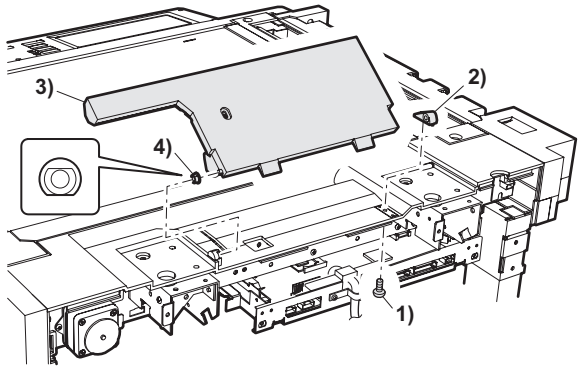

3) Remove the document size detection PWB (Light emitting side)

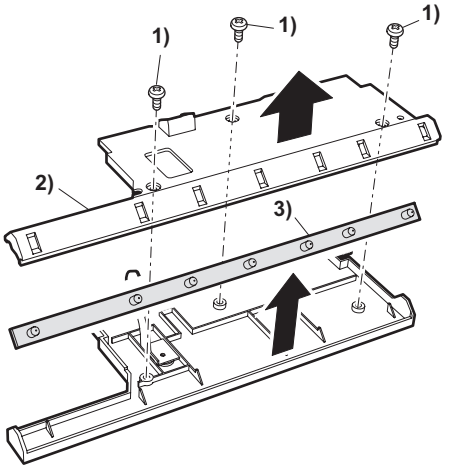

a-2. Original size detection PWB (Light receiving side)

1) Remove the operation panel lower cabinet.
2) Remove the original size detection PWB (Light receiving side)

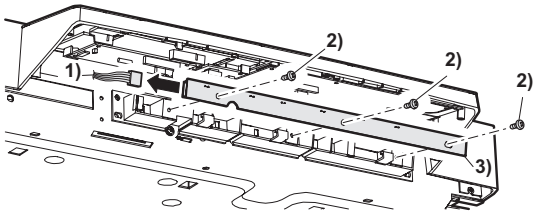

b. Operation panel unit

1) Remove the original exit tray.

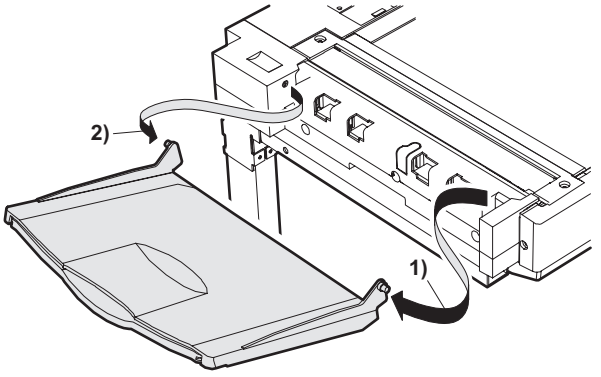

2) Remove the scanner left cabinet.

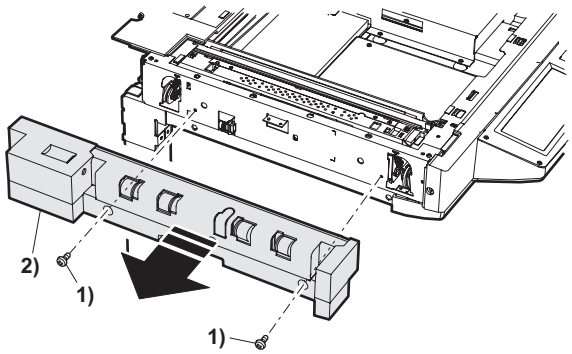

3) Remove the scanner right cabinet.

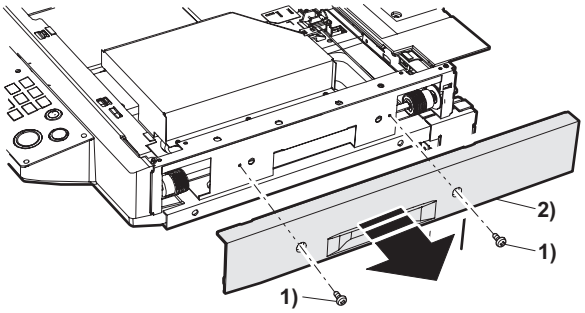

4) Remove the operation panel lower cabinet.

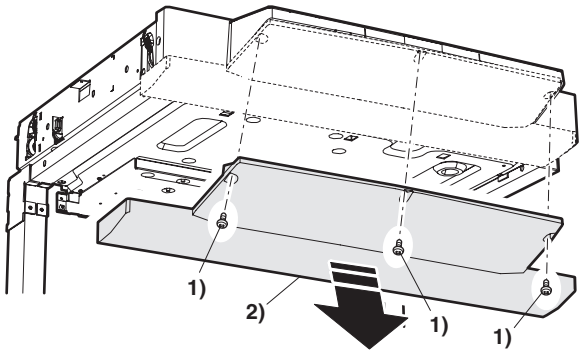

5) Remove the harnesses.

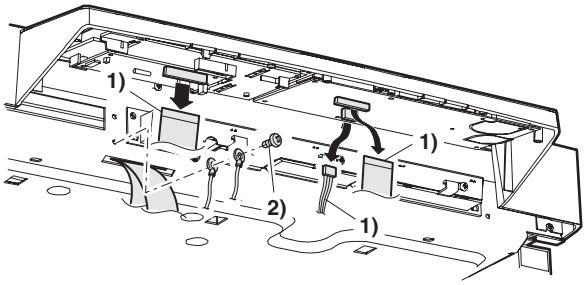

6) Remove the operation panel unit.

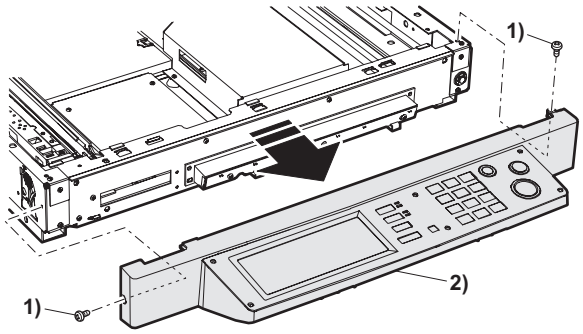

b-1. LVDS PWB

1) Remove the operation panel unit.
2) Remove the connector and the screw, and remove the LVDS PWB.

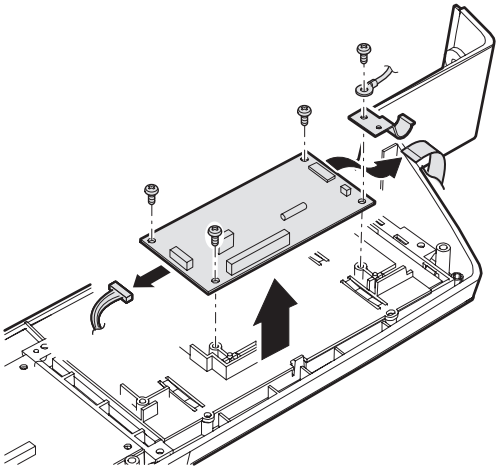

b-2. MFP operation PWB

1) Remove the operation panel unit.
2) Remove the MFP operation PWB

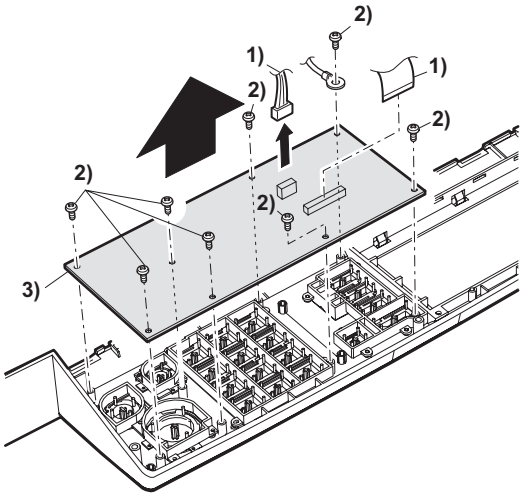

9. Filter

A. Maintenance and parts replacement

(1) Maintenance list

Unit name	No.	Part name	When calling	100K	200K	300K	400K	500K	600K	700K	800K	Remark
Filters	1	Ozone filter		▲	▲	▲	▲	▲	▲	▲	▲	

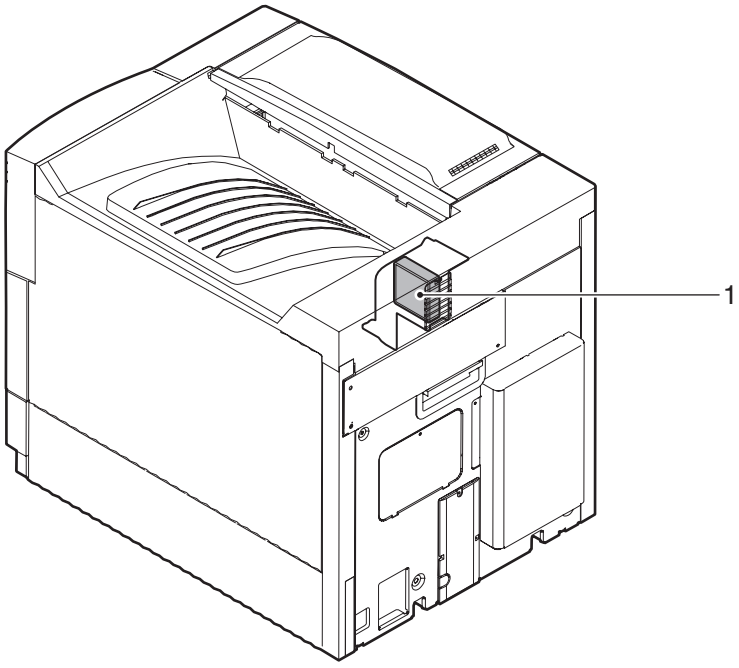

(2) Maintenance and parts replacement

No.	Unit	Parts		
a		1	Ozone filter	▲

a-1. Ozone filter

1) Remove the paper exit tray cabinet cover, and remove the ozone filter.

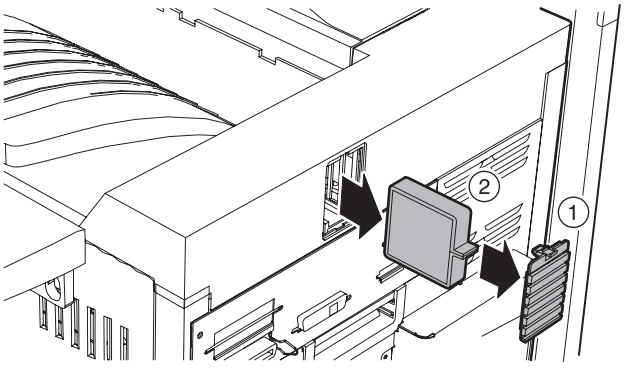

10. Drive section

A. Maintenance and parts replacement

(1) Maintenance list

Unit name	No.	Part name	When calling	100K	200K	300K	400K	500K	600K	700K	800K	Remark
Drive section	1	Gears (Specified position)	×	☆	☆	☆	☆	☆	☆	☆	☆	

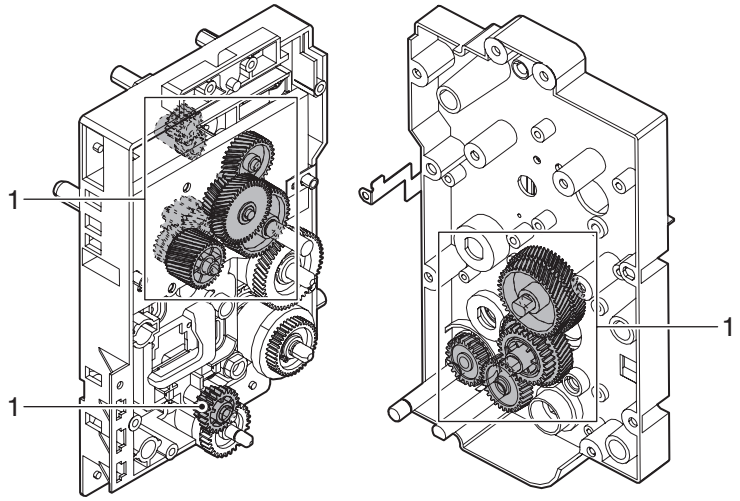

(2) Maintenance and parts replacement

No.	Unit	Parts		
a	Drive unit	1	Gears	×☆
		2	Paper cassette paper feed clutch	
		3	Paper transport clutch	
		4	Resist roller clutch	
b		1	Drum motor	
		2	Main motor	

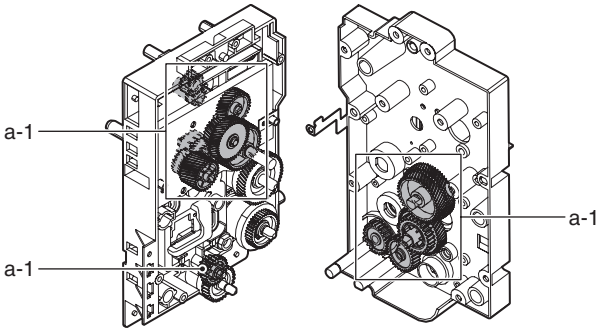

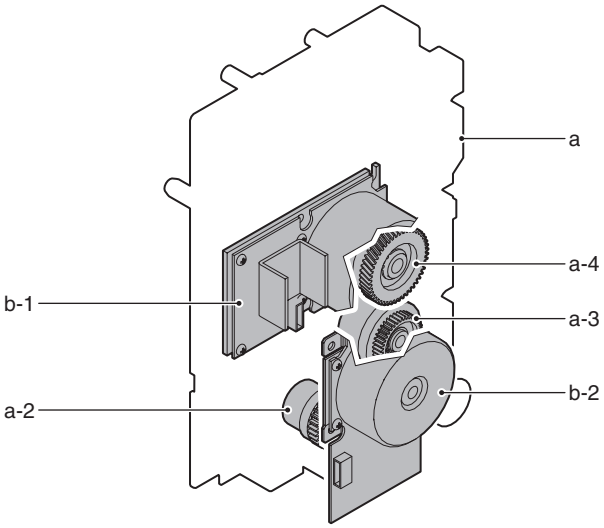

a. Drive unit

1) Remove the screw, and remove the left door.

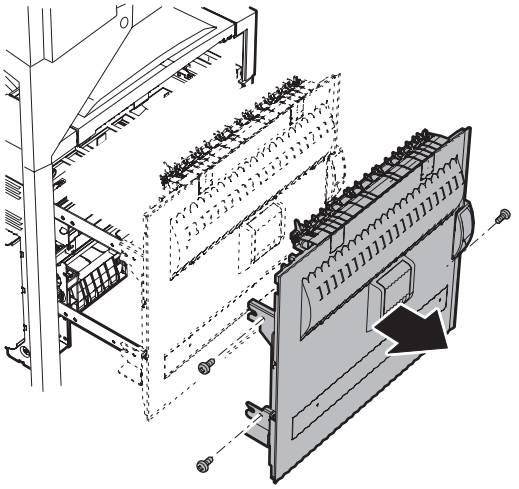

2) Remove the screw, and remove the rear cabinet.

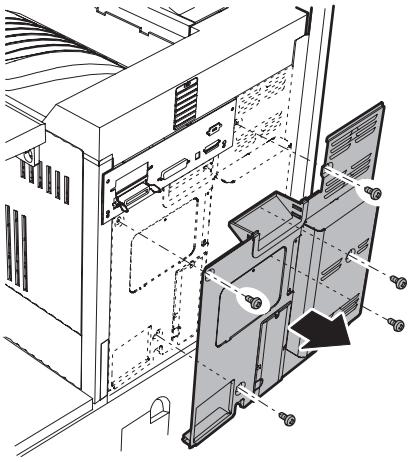

3) Remove the screw, and remove the slide rail.

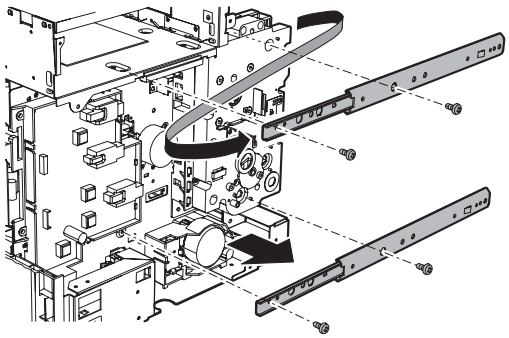

4) Remove the connector and the screw, and remove the main drive unit.

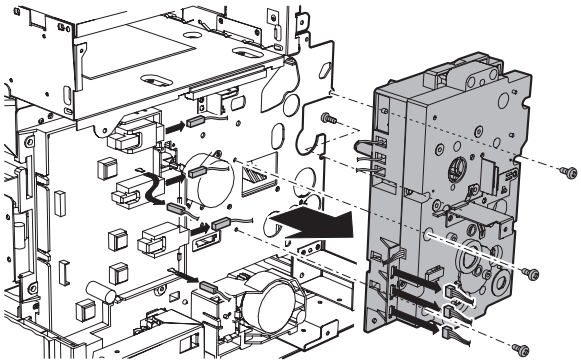

a-1. Gears

1) Remove the main drive unit.
2) Remove the screw, and remove the drive cover.

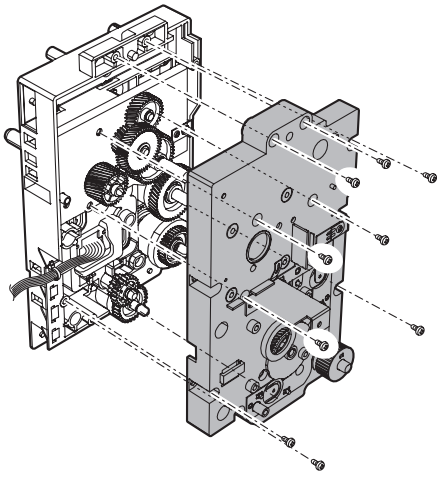

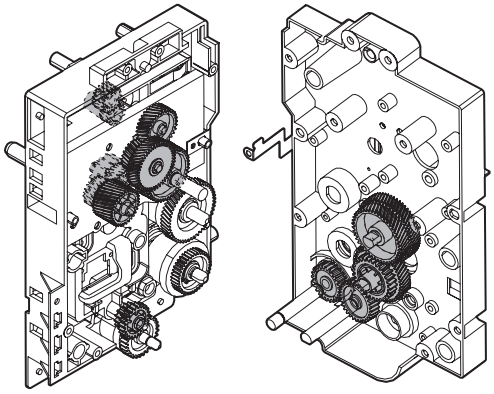

∗ Remove the resist roller unit, and apply grease to the bottom section of the PS front roller section brake.

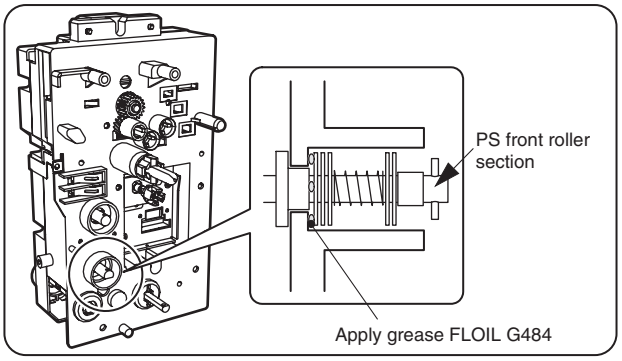

a-2. Paper cassette paper feed clutch

a-3. Paper transport clutch

a-4. Resist roller clutch

1) Remove the main drive unit.
2) Remove the parts.

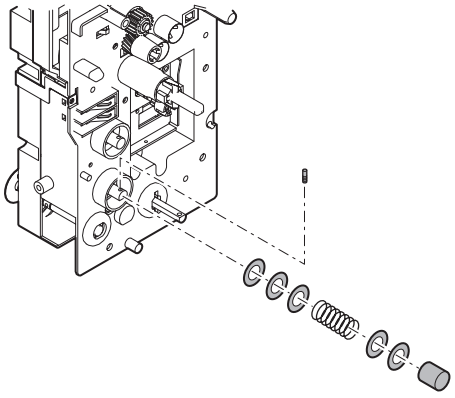

3) Remove the screw, and remove the drive cover.

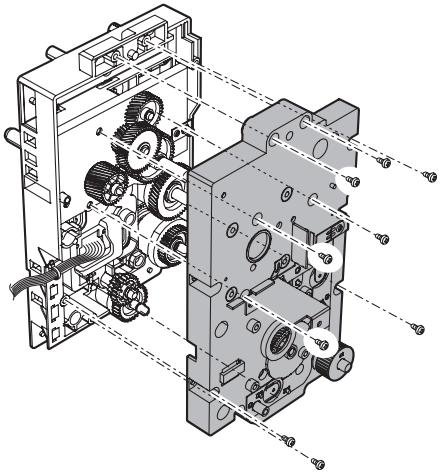

4) Remove the connector, the paper cassette paper feed clutch unit, the paper transport clutch unit, and the resist roller clutch unit.

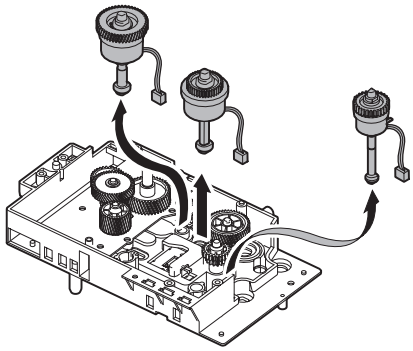

5) Remove the parts.

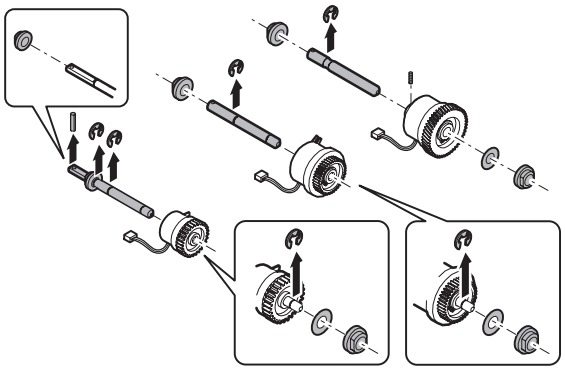

b-1. Drum motor

b-2. Main motor

1) Remove the screw, and remove the rear cabinet.

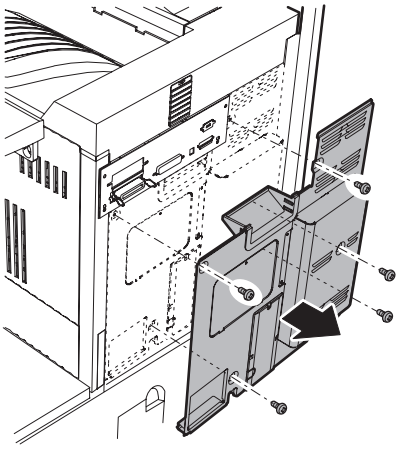

2) Remove the connector and the screw, and remove the drum motor and the main motor.

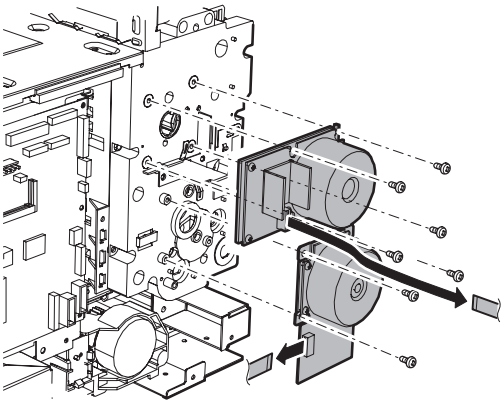

11. Power section

A. Maintenance and parts replacement

No.	Unit	Parts	
a	Power unit	1	Reactor PWB (200V only) Filter PWB (Taiwan only)
		2	Power PWB
		3	Relay PWB
b		1	Main switch
		2	Cooling fan motor
		3	Fuse PWB
		4	High voltage PWB

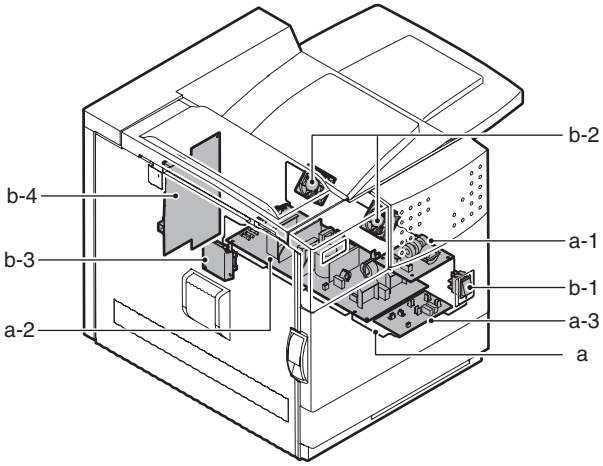

a. Power unit

1) Remove the main switch mounting plate.

2) Remove the screw, and remove the right cabinet.

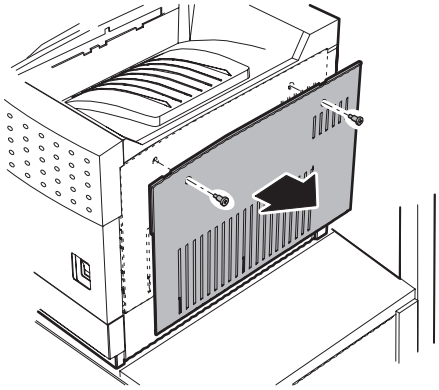

3) Remove the screw, and remove the right noise cover.

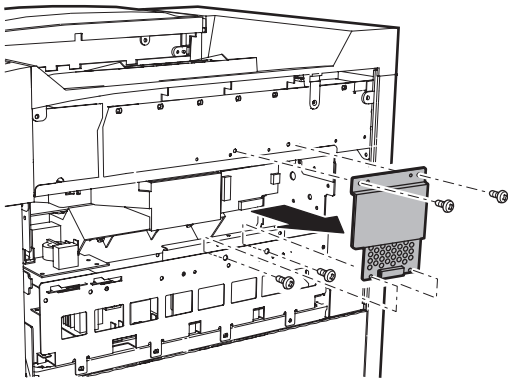

4) Remove the connector, and remove the screw.

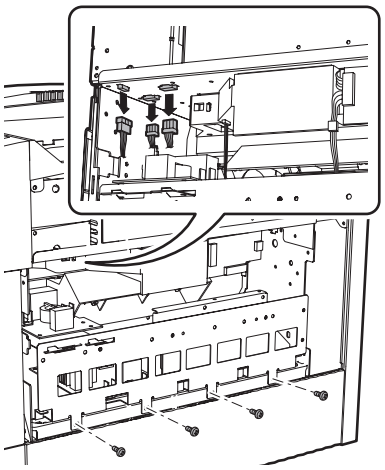

5) Remove the screw, and remove the rear cabinet.

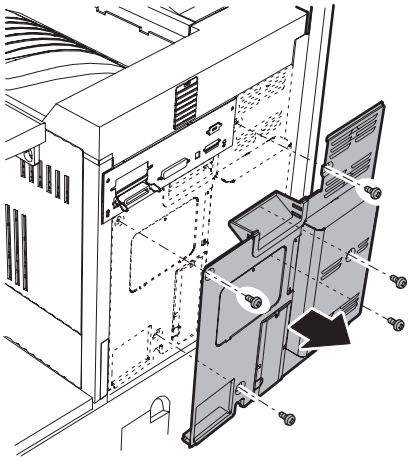

6) Remove the connector, the screw, and the angle. Remove the snap band.

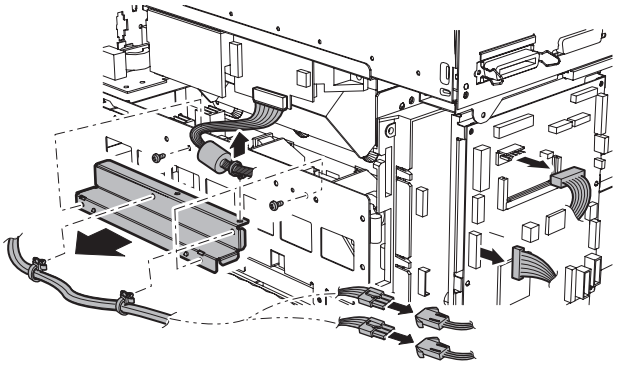

7) Remove the power unit.

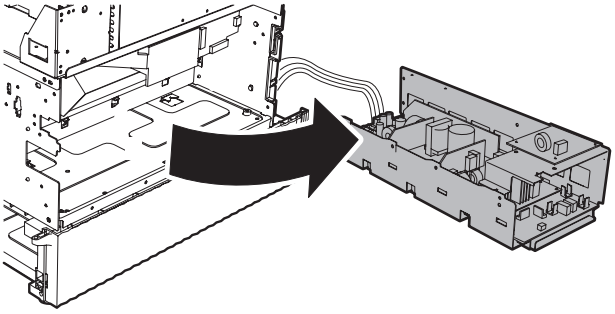

a-1. Reactor PWB (200V only) / Filter PWB (Taiwan only)

1) Remove the power unit.
2) Remove the connector and the PWB supporter, and remove the filter PWB.

(200V only)

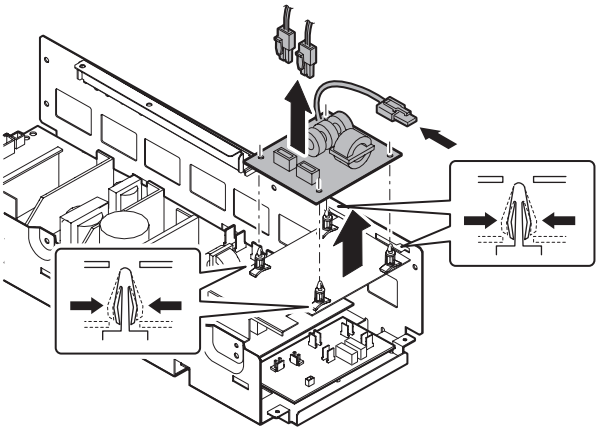

(Taiwan only)

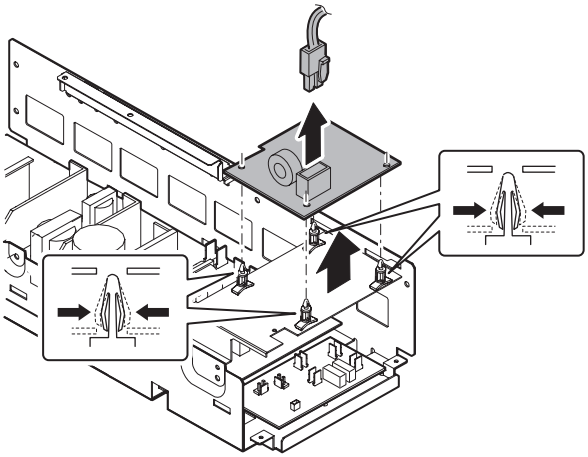

a-2. Power PWB

1) Remove the power unit.
2) Remove the connector, the screw, and the PWB supporter, and remove the power PWB.

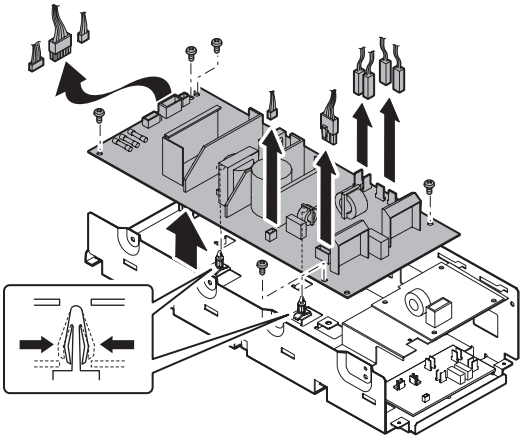

a-3. Relay PWB

1) Remove the power unit.
2) Remove the connector and the bushing, and remove the filter PWB mounting plate.

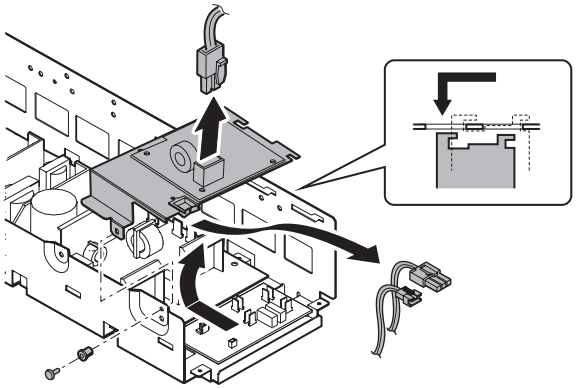

3) Remove the connector and the PWB supporter, and remove the relay PWB.

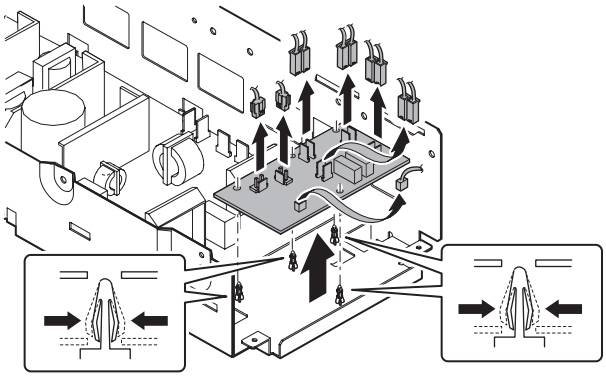

b-1. Main switch

1) Pull out the No. 1 paper feed tray unit, and push up and remove the front door.

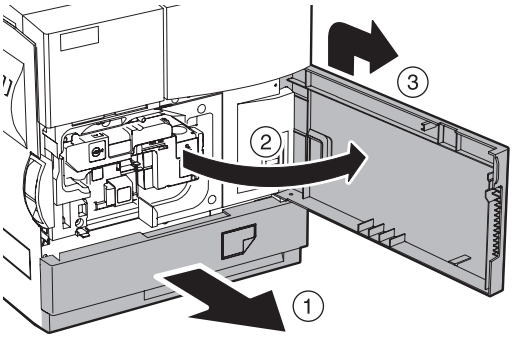

2) Release the lock, and pull out the left door. Remove the screw, and remove the front cover right.

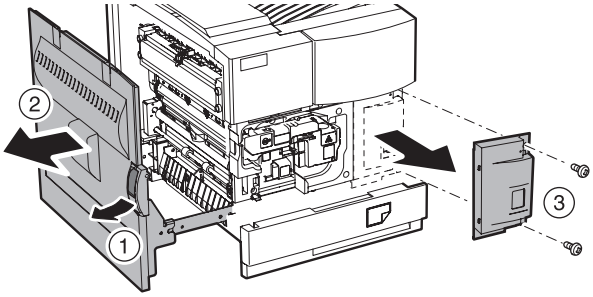

3) Remove the screw, and remove the main switch mounting plate.

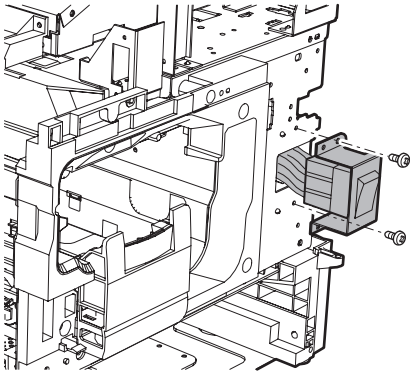

4) Remove the connector, and remove the main switch.

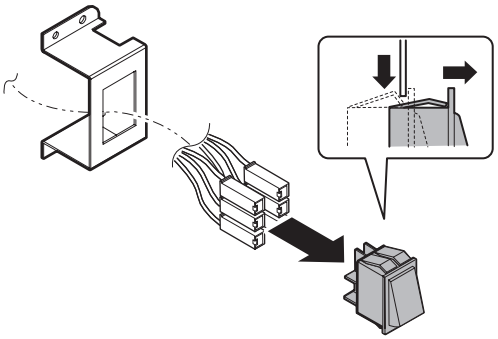

b-2. Cooling fan motor

1) Remove the power unit.
2) Remove the connector and the screw, and remove the duct holding cover.

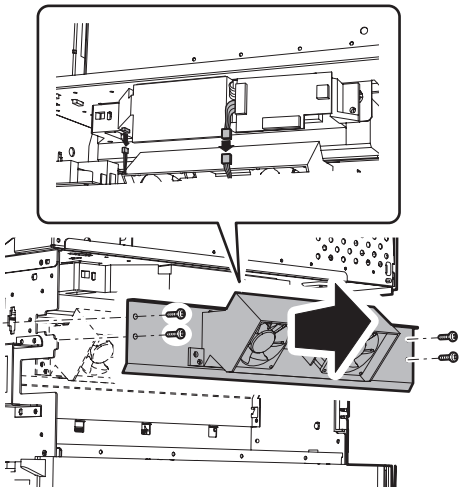

3) Remove the screw, and remove the cooling fan motor.

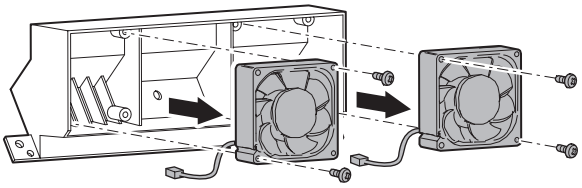

∗ When installing the fan, check the indication arrow and note the fan direction.

b-3. Fuse PWB

1) Remove the screw, and remove the rear cabinet.

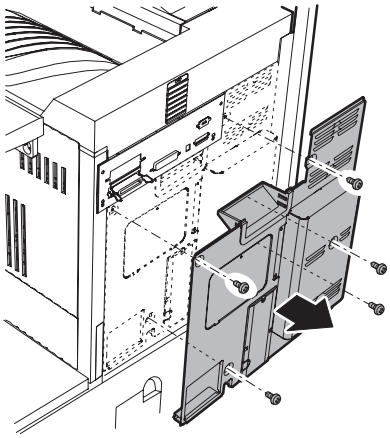

2) Remove the connector and the screw, and remove the inlet mounting plate.

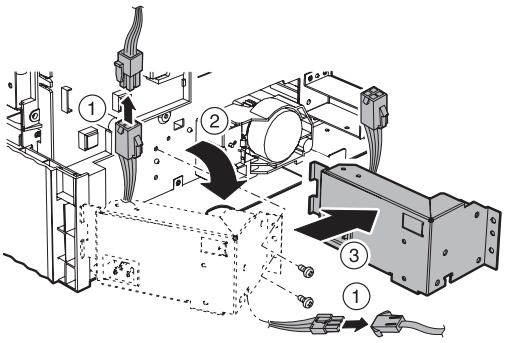

3) Remove the connector and the screw, and remove the fuse PWB.

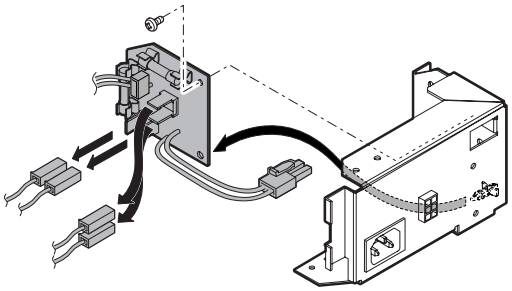

b-4. High voltage PWB

1) Remove the rear cabinet.
2) Remove the connector and the screw, and remove the PCU PWB unit.

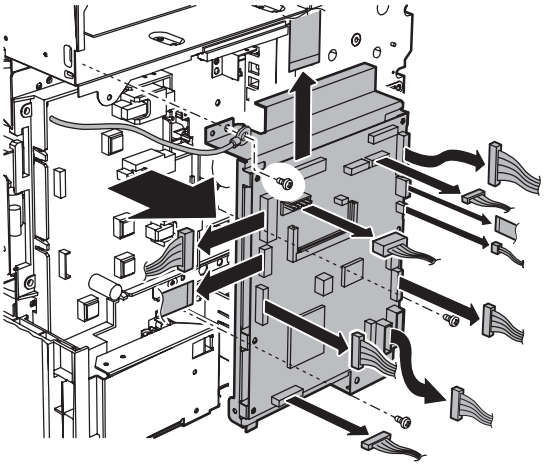

3) Remove the connector and the screw, and remove the high voltage PWB.

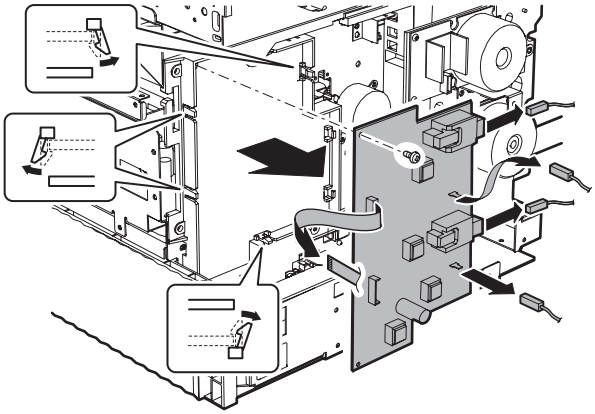

12. PWB

A. Maintenance and parts replacement

No.	Unit	Parts	
a		1	MFP controller PWB
		2	HDD (Option)
		3	PCU PWB
		4	Mother PWB

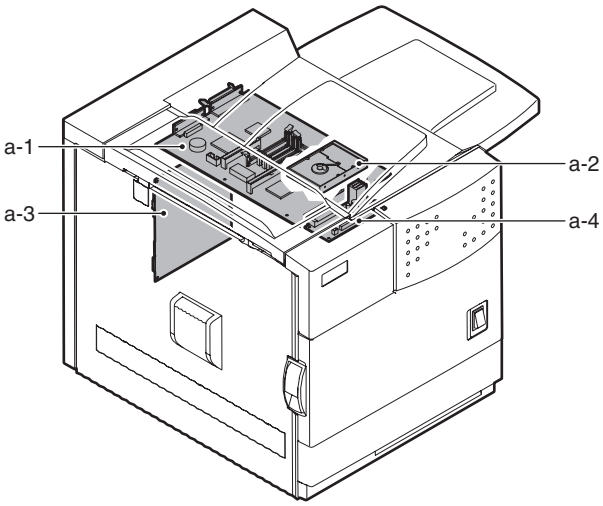

a-1. MFP controller PWB

1) Remove the screw, and pull out the MFP controller PWB unit.
2) Remove the connector.

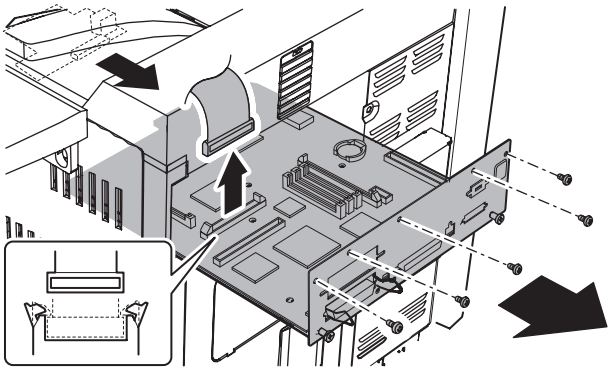

3) Release the lock, and remove the MFP controller PWB unit.

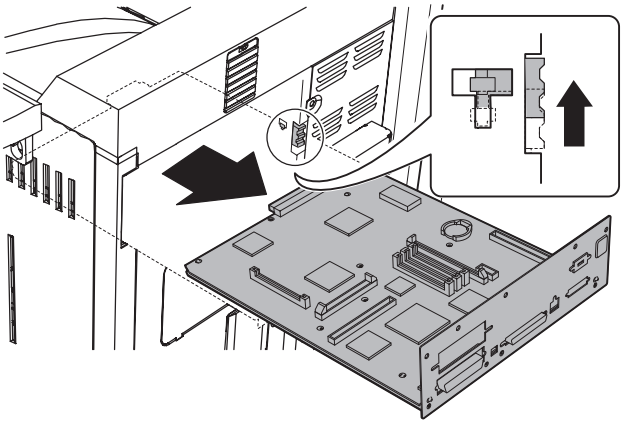

4) Remove the screw, and remove the MFP controller PWB.

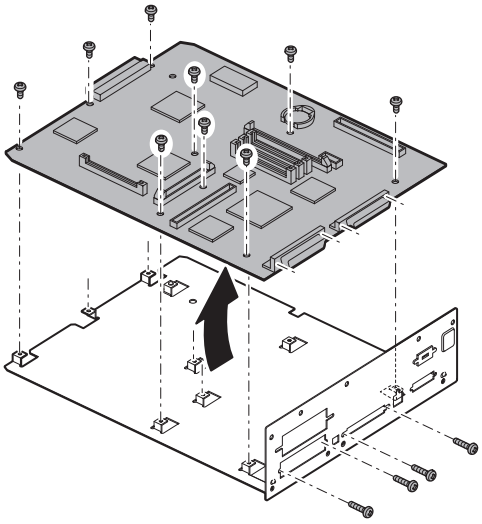

a-2. HDD (Option)

1) Remove the screw, and remove the right cabinet.

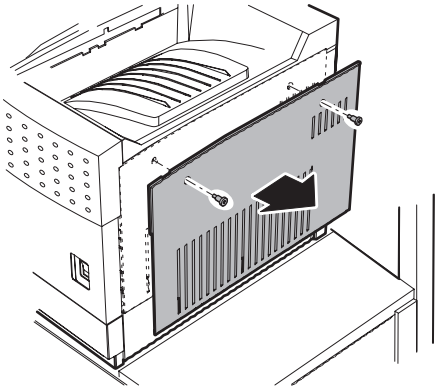

2) Remove the screw, and remove the HDD cover.

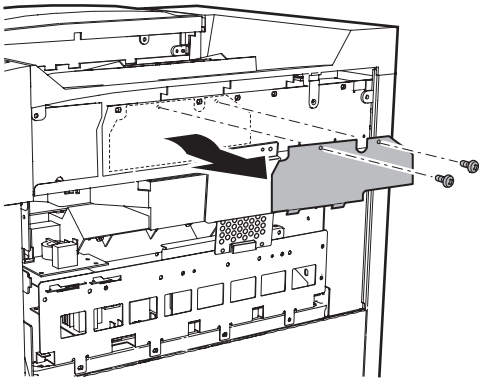

3) Remove the connector, and remove the screw.
4) Pull out the HDD unit.

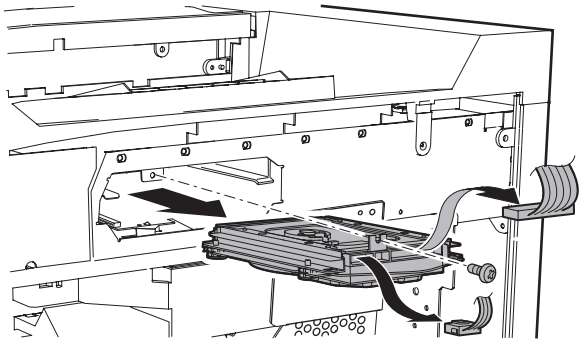

5) Remove the screw, and remove the HDD cover.
6) Remove the screw, and remove the HDD angle.

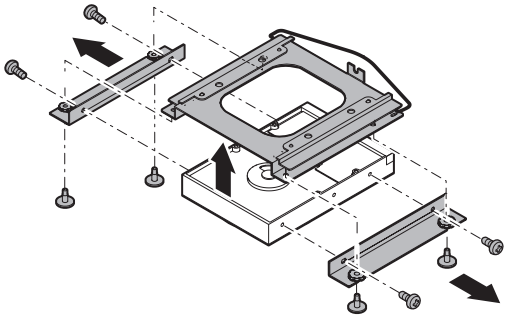

a-3. PCU PWB

1) Remove the screw, and remove the rear cabinet.

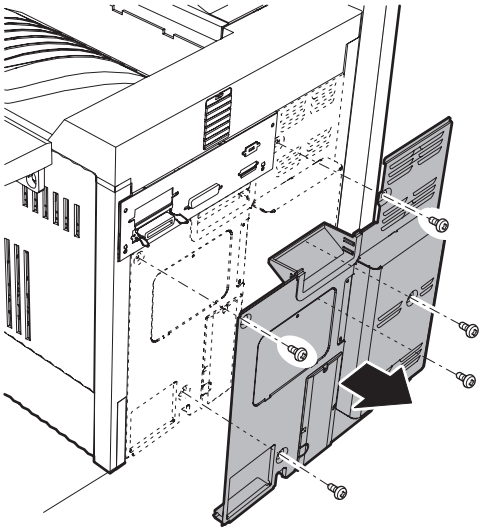

2) Remove the connector and the screw, and remove the PCU PWB.

∗ When replacing the PCU PWB, replace the EEPROM on the PCU PWB which is to be replaced.

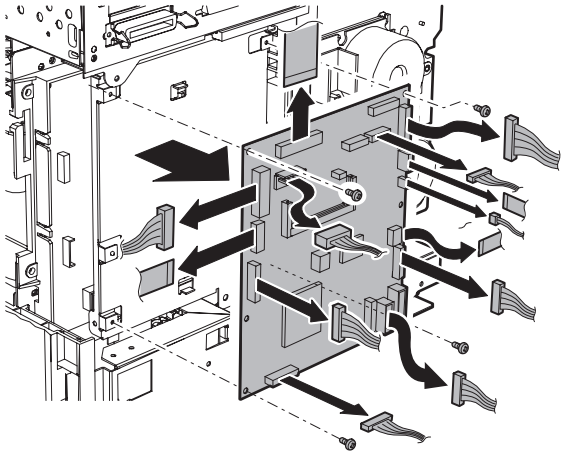

a-4. Mother PWB

1) Remove the fusing unit.
2) Remove the paper exit reverse unit.
3) Remove the front cover right.
4) Remove the HDD cover.
5) Remove the MFP controller PWB unit.
6) Remove the cooling duct.
7) Remove the controller duct.
8) Remove the screw and the connector, and remove the main duct, the sub duct, and the box cooling duct lower.

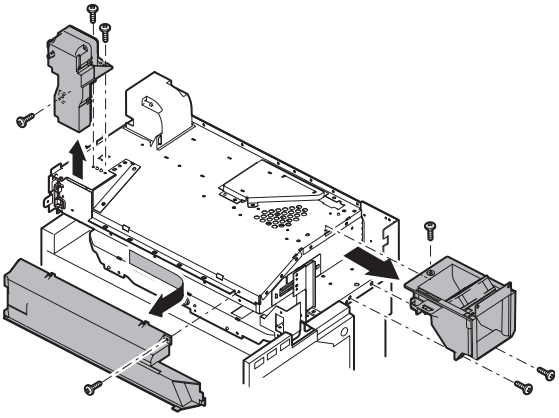

9) Remove the screw, and remove the controller box upper.

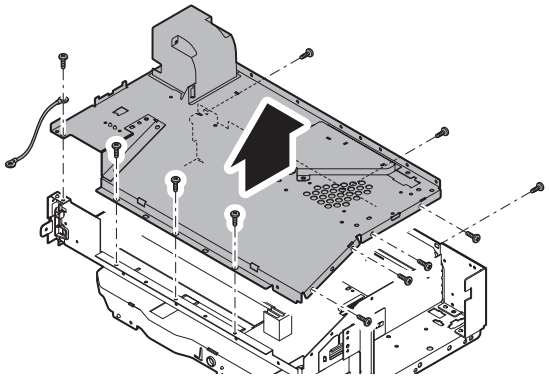

10) Remove the screw, and remove the mother PWB.

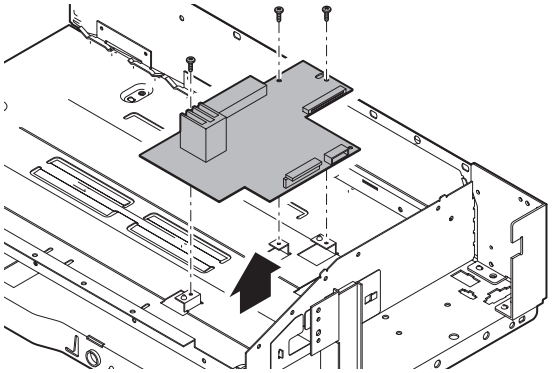

13. Fan motor

A. Maintenance and parts replacement

No.	Unit	Parts	
a		1	Controller cooling fan motor 1
		2	Controller cooling fan motor 2
		3	Ozone exhaust fan motor

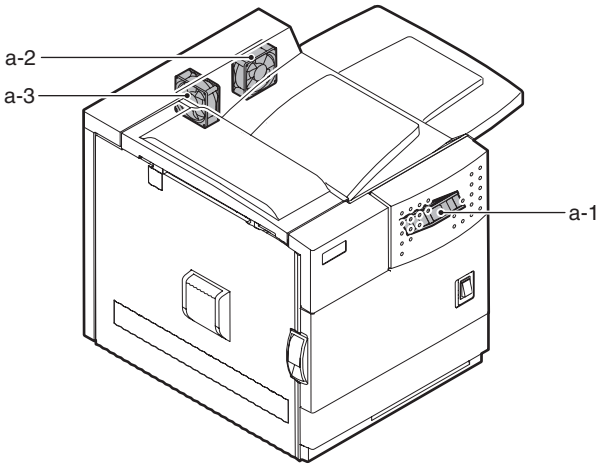

a-1. Controller cooling fan motor 1

a-2. Controller cooling fan motor 2

1) Pull out the left door.

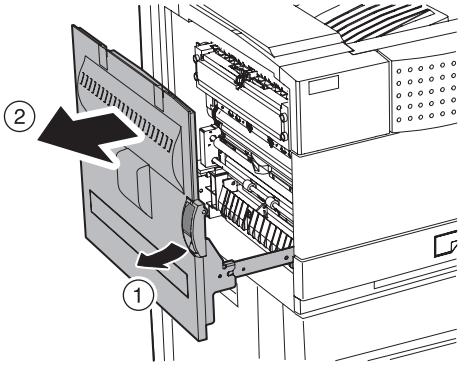

2) Remove the screw, and remove the rear cabinet.

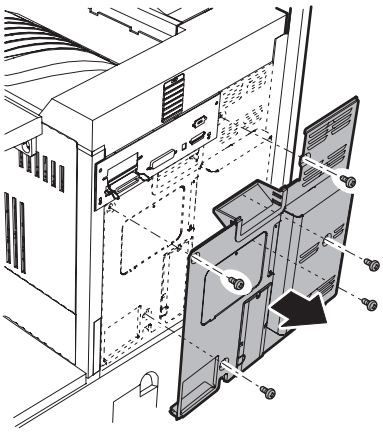

3) Remove the screw, and remove the paper exit upper cabinet.
4) Remove the screw, and remove the left rear cabinet.
5) Remove the screw, and remove the front left upper cabinet.

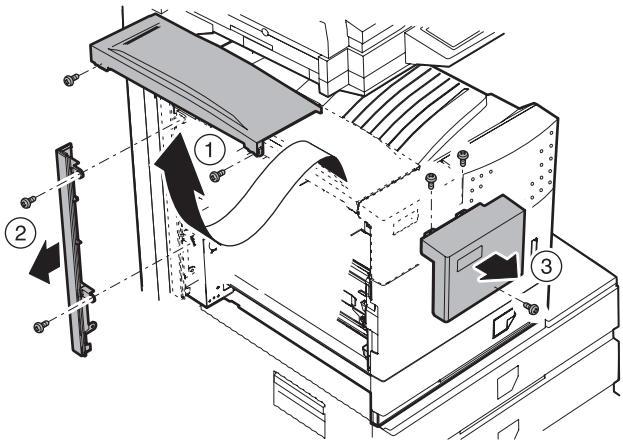

6) Remove the screw, and remove the paper exit tray cabinet.
7) Remove the screw, and remove the front right upper cabinet.
8) Remove the front door.

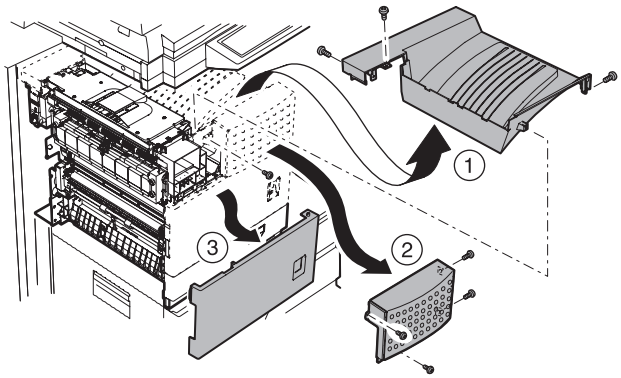

9) Remove the screw, and remove the cooling fan duct upper.

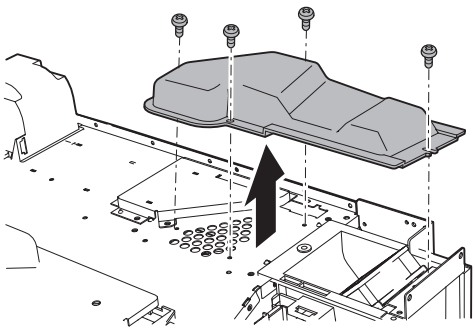

10) Remove the snap band, the screw, and the connector, and remove the fan fixing plate.
11) Remove the screw, and remove the controller cooling fan motor 1.

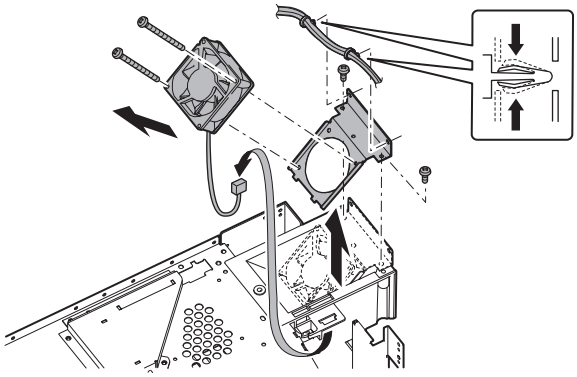

∗ When installing the fan, note the fan direction.

12) Remove the connector and the screw, and remove the controller cooling fan motor 2.

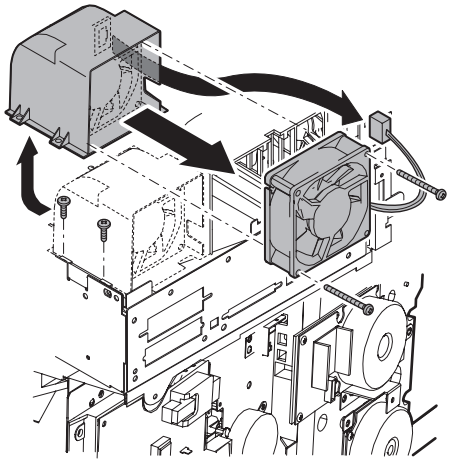

∗ When installing the fan, note the fan direction.

a-3. Ozone exhaust fan motor

1) Pull out the left door.
2) Remove the rear cabinet.
3) Remove the paper exit upper cabinet, the left rear cabinet, and the front left upper cabinet.
4) Remove the paper exit tray cabinet, the front right upper cabinet, and the front door.
5) Remove the screw, and remove the controller duct.
6) Remove the connector and the screw, and remove the ozone exhaust fan motor.

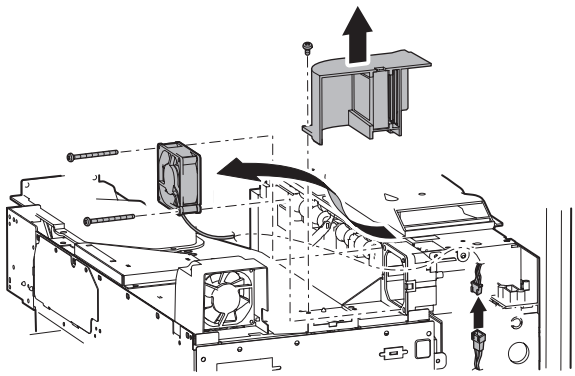

∗ When installing the fan, check the indication arrow and note the fan direction.

[8] ADJUSTMENTS

No.	Section	Adjustment item			
1	Process section	A	Doctor gap adjustment		
		B	MG roller main pole position adjustment		
		C	High voltage output adjustment		
2	Image check, adjustment	A	Adjustments on the engine side	<1>	LSU right angle adjustment
				<2>	Print off-center adjustment
				<3>	Each tray resist amount setting
				<4>	Self print lead edge adjustment
				<5>	Front/rear and left/right void amount setting
		B	Adjustment on the scanner side	<1>	OC scan distortion adjustment
				<2>	SPF height adjustment
				<3>	SPF scan distortion adjustment
				<4>	OC scan magnification ratio adjustment
				<5>	SPF scan magnification ratio
				<6>	OC scan lead edge adjustment
				<7>	SPF scan lead edge adjustment
				<8>	Original off-center adjustment
3	Scanner section	A	OC scan distortion adjustment		
		B	Vertical image distortion balance adjustment		
		C	Vertical image distortion balance adjustment		
		D	Vertical (sub scanning direction) distortion adjustment		
		E	Height adjustment of original detection light emitting unit		
		F	Original size detection photo sensor check		
		G	Original size detection photo sensor adjustment		
		H	Image density adjustment		
		I	DSPF width detection adjustment		

1. Process section

A. Doctor gap adjustment

This adjustment is performed in the following cases:

- When developer is scattered.
- When an uneven image is produced.

1) Remove the developer cartridge and the developing unit from the machine.
2) Remove the DV cover and the developer from the developing unit.
3) Remove the DVR cover, the DVF handle, the idle correction plate assembly, and the HG gear 22T, insert a thickness gauge (0.46mm) as shown in the figure below, and check that the clearance is within the specified range.

If the clearance is not within the specified range, adjust the doctor gap in the following procedures.

4) Loosen the developing doctor fixing screw A.
5) Insert the thickness gauge (0.46mm) again as shown in the figure below.
6) Push the developing doctor in the arrow direction and tighten the fixing screw.
7) Check the developing doctor gap. If the clearance is within the specified range, fix the screw with screw lock.
8) After completion of the job, apply screw lock.

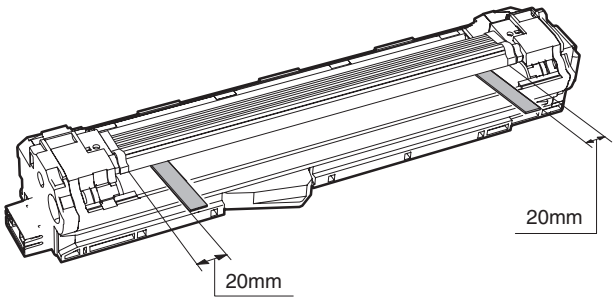

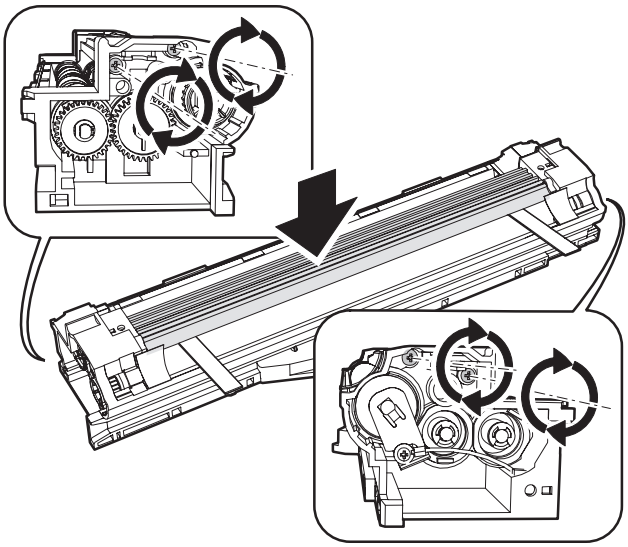

<Adjustment specification>

	Specification	Ambient temperature
Both sides (Position at 20 - 50mm)	0.45±0.03mm	5 - 30°C
Center	0.45 - 0.60mm	

B. MG roller main pole position adjustment

This adjustment is performed in the following cases:

- When developer is scattered.
- When an uneven image is produced.

1) Remove the developer cartridge and the developing unit from the machine.
2) Remove the DV cover and the developer from the developing unit.
3) Remove the DVF handle and put the developing unit on a flat surface.
4) Bind a string to a needle.
5) Hold the string and move the needle toward the MG roller.
   (Since the MG roller diameter is small, use of a clip cannot make an accurate adjustment.)
6) With the needle tip 2 - 3 mm apart from the MG roller surface, mark the point on the MG roller in the elongated line of the needle.
   (Keep the needle and the MG roller apart from each other.)
7) Measure the distance from the marking position to the P surface of the developing unit, and check that the distance is within the specified range.

If the distance is not within the specified range, perform the adjustment in the following procedures.

8) Loosen the fixing screw of the main pole fixing plate.

9) Move the adjustment plate in the arrow direction and adjust.

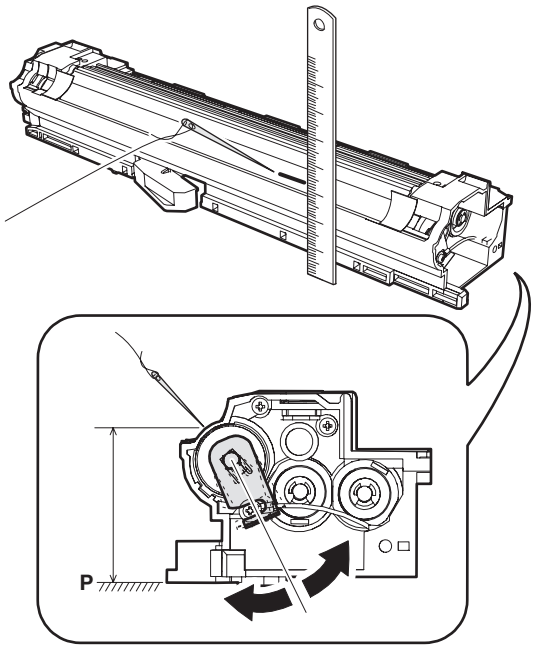

<Adjustment specification>

		Specification
Marking position	Measure from the P surface above.	54.2mm

C. High voltage output adjustment

(1) Developing bias output check and setup

1) Remove the rear cabinet to allow checking of the high voltage monitor output pin.
2) Execute the simulation of the target high voltage. (See the table below.)
3) Select the mode to be set with 10-key, and press START key.
4) Enter the set value with 10-key and press START key. The set value is outputted for 30 sec.
5) Apply a high voltage tester between the measurement pin and the frame.

Note: Take care not to short the measuring pin and the frame.

6) The unit stops after 30 sec of output.

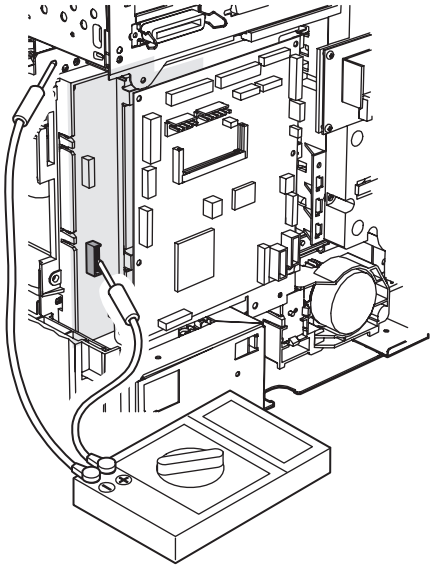

			Default		Set range	Measurement pin	High voltage probe impedance
			Monitor output voltage	Set value			
MC grid MAIN GRID (SIM 8-2)	AUTO	AE mode	45PPM: -650V±5V 35PPM: -620V±5V	45PPM: 645 35PPM: 615	200~900	CN2-7	100MΩ
	CHARACTER	Text mode	-650V±5V	645	200~900		
	MIX	Text/Photo mode	-650V±5V	645	200~900		
	PHOTO	Photo mode	-650V±5V	645	200~900		
	PRINTER	Printer mode	-650V±5V	645	200~900		
	FAX	Fax mode	-650V±5V	645	200~900		
Transfer current (THV+ (SIM 8-6)	FRONT	Front		45PPM: 267 35PPM: 220	0~620		
	BACK	Back		45PPM: 310 35PPM: 267	0~620		
Developing bias DV BIAS (SIM 8-1)	AUTO	AE mode	45PPM: -500V±5V 35PPM: -470V±5V	485	0~745	CN2-1	100MΩ
	CHARACTER	Text mode	-500V±5V	485	0~745		
	MIX	Text/Photo mode	-500V±5V	485	0~745		
	PHOTO	Photo mode	-500V±5V	485	0~745		
	PRINTER	Printer mode	-500V±5V	485	0~745		
	FAX	Fax mode	-500V±5V	485	0~745		
	PLUS	Positive bias	+150V±5V	150	0~255		
Separation voltage SHV (SIM 8-17)	FRONT	Front	45PPM: +0.22±0.1V 35PPM: +1.37V±0.1V	45PPM: 160 35PPM: 120	0~240	CN2-3	10MΩ
	BACK	Rear	45PPM : +0.22±0.1V 35PPM: +1.37V±0.1V	45PPM: 160 35PPM: 120	0~240		
Transfer voltage THV (SIM 8-17)			-800V±10V	780	0~1250	CN2-5	10GΩ

2. Image check, adjustment

(1) Copy image check

1) Place a test chart (UKOG-0089CSZZ) on the reference position of the OC, and make a copy.
2) Place a test chart (made as shown below) face-down on the (D)SPF, set the document guide, and make a copy. (Single → Single)
3) Place a test chart (made as shown below) face-up on the DSPF, set the document guide, and make a copy. (Duplex → Single)

Making of SFP test chart

a. Use standard paper of A3.
b. Mark to the full width of the paper so that each void/image loss can be checked.
c. At that time, mark so that the front /rear and the top/bottom can be identified.
d. Draw a center line in the paper transport direction to identify the off center.

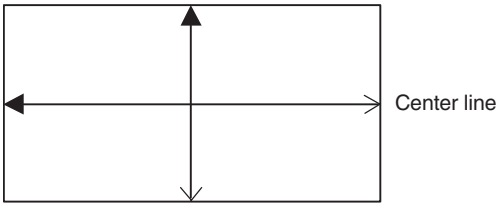

Standard paper of A3

4) Check each output copy.
   (Image distortion/ each void/ lead edge position/ Off-center/ Magnification ratio/ Density/ Dirt, etc.)
5) If there is no problem in copy images, the image check is completed.

(2) Division of adjustment positions

1) If there is any problem in checked images, perform self-print and the adjustment positions (scanner side/ engine side) are divided.

*: If there is any problem in the copy image and no problem in the self print, an adjustment on the scanner side is required.
   If there is any problem on the copy image and any problem in the self print, an adjustment on the engine side is required.

(3) Adjustment procedures

Perform the adjustment procedures as described below.

1	LSU right angle adjustment	SIM64-1: Pattern “71”
2	Print off-center adjustment	SIM50-10
3	Each tray resist amount setting	SIM51-2
4	Print lead edge adjustment	SIM50-5
5	Front/rear and left/right void amount setting	SIM50-1
6	OC scan distortion adjustment	
7	SPF height adjustment	
8	SPF scan distortion adjustment	SIM51-2
9	Scan magnification ratio	SIM48-1
10	SPF/DSPF scan magnification ratio	SIM48-1
11	OC scan lead edge adjustment	SIM50-1
12	SPF scan lead edge adjustment	SIM50-6
13	Original off-center adjustment	SIM50-12

A. Adjustments on the engine side

<1> LSU right angle adjustment

Items which must have been completed before this adjustment.

- Nothing special

Items which must be executed after completion of this adjustment.

- Print off-center adjustment
- Print lead edge adjustment
- Front/rear and left/right void amount setting

1) Execute SIM64-1.
2) The print pattern "71" is printed.
3) Check the output print.
4) Loosen two fixing screws of the LSU unit
   (M4 screws which are fixing the LSU and the top plate).
5) Adjust the LSU fixing position with the adjustment memory as the reference.
6) Tighten two fixing screws of the LSU unit.
7) Print again in the grid pattern and check the print.
8) Repeat procedures 4) to 7) until the specification is satisfied.

```
SIMULATION 64-1
SELF PRINT MODE. SELECT 0-7, AND PRESS START.
0. TRAY SELECT   :1    1. PRINT START
2. PRINT PATTERN:87    3. DENSITY    :1        1
4. MULTI :        1    5. MODE       :1
6. LEVEL :        1    7. DUPLEX     :1
```

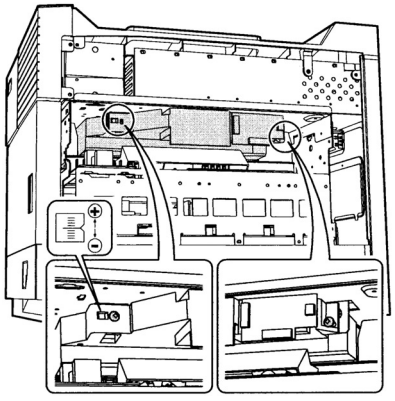

<Right angle check method>

<1> Make self-print of pattern 71.
<2> Draw a line perpendicular to the sub scan direction (paper transport direction) with a square.
   The point of intersection of the perpendicular line and the horizontal line is regarded as the starting point.
<3> Measure distance A (between the self-printed line and the perpendicular line drawn with a square) at a position of 220mm from the starting point.
<4> Check that distance A satisfies the following specification.

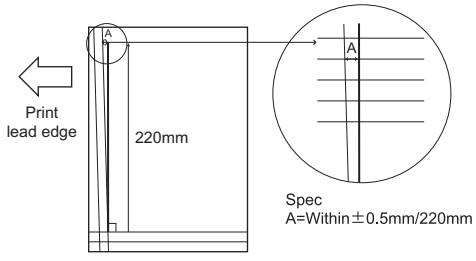

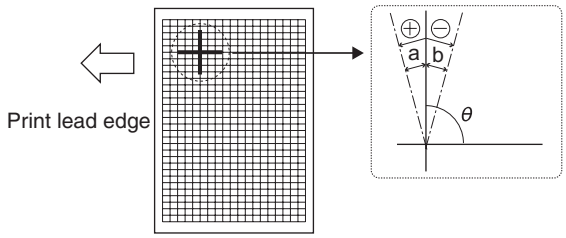

<Specification>

	Measuring point	Specification	Set value
Print distortion adjustment	Self print pattern 71	θ = 90° ± 0.13°	θ changes about 0.25 degrees for 1 scale of adjustment. (A shifts about 1mm.)

<2> Print off-center adjustment

Items which must have been completed before this adjustment.

- LSU right angle adjustment (If there is no distortion in self print, the adjustment is not required.)

Items which must be executed after completion of this adjustment.

- Each tray resist amount setting
- Print lead edge adjustment
- Front/rear and left/right void amount setting

1) Execute SIM50-10.
2) Set the paper feed tray and the magnification ratio for the adjustment.
3) After entering the adjustment values, press START key, and printing is started.
4) Check the off-center (distance from the paper edge) of the printed copy. Repeat procedure 2) until the specification is satisfied.

```
SIMULATION 50-10
PRINT OFF-CENTER ADJUSTMENT. SELECT 0-8, AND PRESS
START.
0.TRAY SELECT 1   1.COPY START
2.MAGNIFICATION 100
(ADJUSTMENT DATA)
3.TRAY1 50 4.TRAY2 50 5.TRAY3 50
6.TRAY4 50 7.BPT  50  8.ADU   50
```

2

Adjustment position		Measurement reference	Specification	Set value		
				Default	Range	
Tray 1	Tray 1	Output pattern center line	0±1.5mm	50	0 - 99	Set value 1: 0.1mm shift
Tray 2	Tray 2					
Tray 3	Tray 3/LCC left					
Tray 4	Tray 4/LCC right					
MFT	Manual feed					
ADU	Duplex					

- For the duplex mode (Single → Duplex), add 10 to the above set value.
- When the print line is shifted toward a from the paper center, decrease the value.
- When the print line is shifted toward b from the paper center, increase the value.

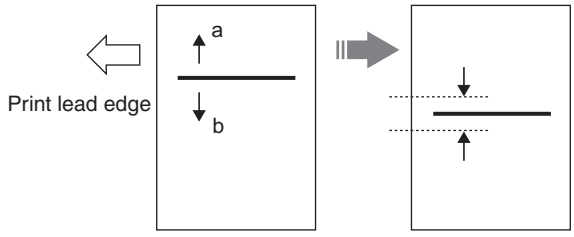

<3> Each tray resist amount setting

* This adjustment is executed when there is any lead edge variation or skew for each tray.

Items which must have been completed before this adjustment.

- LSU right angle adjustment (If there is no distortion in self print, the adjustment is not required.)
- Print off-center adjustment

Items which must be executed after completion of this adjustment.

- Print lead edge adjustment
- Front/rear and left/right void amount setting

1) Execute SIM 51-2.
2) Enter the resist adjustment value with 10-key.
3) Press [START] key.
   When [START] key is pressed, the adjustment value is set and paper feed and copying are performed.
4) Adjust the resist quantity so that paper is transferred stably.

```
SIMULATION 51-2
RESIST TIMING ADJUSTMENT. SELECT 0-8, AND PRESS START.
0.TRAY SELECT 1  1.PRINT START
2.TRAY1 60       3.TRAY2 50  4.DESK 50
5.BPT   55       6.ADU   50
7.SPF(HIGH) 60  8.SPF(LOW) 75
```

1

Item			Set range	Default	
				AR-M351U/ M355U	AR-M451U/ M455U
2	TRAY1	Tray 1 resist adjustment value	0 - 99	65	60
3	TRAY2	Tray 2 resist adjustment value		55	50
4	DESK	Desk resist adjustment value		55	50
5	BPT	Manual tray resist adjustment value		60	55
6	ADU	ADU resist adjustment value		55	50

When the set value is increased, the warp amount of paper is increased. When the adjustment value is decreased, the warp amount of paper is decreased.

<4> Self print lead edge adjustment

Items which must have been completed before this adjustment.

- LSU right angle adjustment (If there is no distortion in self print, the adjustment is not required.)
- Print off-center adjustment
- Resist amount adjustment

Items which must be executed after completion of this adjustment.

- Front/rear and left/right void amount setting
- OC scan lead edge adjustment
- SPF scan lead edge adjustment

1) Execute SIM 50-5.
2) Set the lead edge void adjustment value (DENA) as specified below.

   (Standard set value) Paper lead edge void: 3.5mm (DENA: 35)

   ∗ Set the adjustment value of DENA to 35. (Enter 35 as the adjustment value of DENA, and press [P] key.)
3) Check the lead edge void area on the self print pattern (SIM67-1).

   (Enter 1 and press [START] key.)
4) If the adjustment result is not satisfactory, perform the following procedures.

   ∗ If the lead edge void area is not 3.5mm:
   Change the adjustment value of RRCB and perform the adjustment. (Change the adjustment value of RRCB and press [START] key.)
   (Shift for the adjustment value change: 0.1mm/step)

```
SIMULATION 50-5
LEAD EDGE ADJUSTMENT. SELECT 0-20, AND PRESS START.
0.TRAY SELECT 1  1.PRINT START
(ADJUSTMENT DATA)                                    2
LEAD EDGE: 2.RRCB 50    3.SIDE2 ADJ. 50
RESIST:  4.T1  50  5.T2  50  6.DESK 50
         7.BPT 50  8.ADU 50
OFF CENTER: 9.T1   50  10.T2  50  11.T3 50  12.T4 50
            13.BPT 50  14.ADU 50

(VOID SETTING) 15.LEAD_EDGE(DENA)  50
               16.TRAIL_EDGE(DENB) 30  17.FRONT/REAR 30
```

<Specification>

	Set position	Specification	Set value
Self print lead edge adjustment SIM 50-5	Print start position A of the output pattern 1	A = 4.0mm or less (Lead and tail total: 8.0mm or less)	Shift of 0.175mm (35ppm) / 0.225mm (45ppm) for set value 1.

[Output pattern]

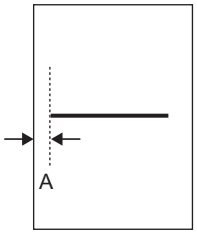

<5> Front/rear and left/right void amount setting

Items which must have been completed before this adjustment.

- LSU right angle adjustment (If there is no distortion in self print, the adjustment is not required.)
- Print off-center adjustment
- Resist amount adjustment
- Print lead edge adjustment

Items which must be executed after completion of this adjustment.

- OC scan lead edge adjustment
- SPF scan lead edge adjustment

1) Execute SIM 50-1.

(Lead edge image loss/void area adjustment)

1) Set the lead edge image loss adjustment value (LEAD EDGE) and the paper lead edge void adjustment value (DENA) as follows.

   (Standard set value)
   Lead edge image loss: 1.5mm (LEDA: 15)
   Paper lead edge void: 3.5mm (DENA: 35)

   ∗ Set LEAD to 15. (Enter 15 as the adjustment value of LEAD, and press [P] key.) (0.1mm/step)
   ∗ Set DENA to 35. (Enter 35 as the adjustment value of DENA, and press [P] key.) (0.1mm/step)
2) Make a copy at the normal ratio (100%) and check the lead edge void area and the image loss. (Enter 100 as the set value of the copy magnification ratio (MAGNIFICATION), and press [START] key.)
3) If the adjustment result is not satisfactory, perform the following procedures.

   ∗ If the lead edge void are is not 3.5mm:
   Change the adjustment value of RRCB and perform the adjustment. (Change the adjustment value of RRCB and press [START] key.) (1msec/step)
   ∗ If the lead edge image loss is not 1.5mm:
   Change the adjustment value of RRCA and perform the adjustment. (Change the adjustment value of RRCA and press [START] key.)
   (Shift for the adjustment value change: 0.2mm/step)

(Rear edge void area adjustment)

Adjust so that the rear edge void area is 3.5mm. (Change the adjustment value of TRAIL EDGE, and press [START] key.)

(Front/rear frame direction image loss adjustment)

Set the adjustment value of SIDE to 20. (Enter 20 as the adjustment value of SIDE, and press [P] key.)

When the adjustment value is changed, the image position is shifted in the front/rear frame direction.

(Front/rear frame direction void area adjustment)

Adjust so that the total of the front/rear direction void areas is 7.0mm. (Change the adjustment values of FRONT/REAR, and press [START] key.)

Front frame void area = 3.5mm Rear frame void area = 3.5mm

If, as shown above, the front and the rear void areas are not even, use SIM 50-5 to adjust the image off-center position.

```
SIMULATION 50-1
LEAD EDGE ADJUSTMENT. SELECT 0-9, AND PRESS START.
0.TRAY SELECT 1   1.COPY START
2.MAGNIFICATION 100                                  2
(ADJUSTMENT DATA) 3.RRCA 50   4.RRCB 50 10.SIDE2 ADJ. 50
(IMAGE LOSS SETTING) 5.LEAD 15 6.SIDE 20
(VOID SETTING) 7.LEAD_EDGE(DENA) 50
               8.TRAIL_EDGE(DENB)30  9.FRONT/REAR 30
```

<Specification>

	Set position	Specification	Set value
Lead edge void adjustment “LEAD EDGE VOID (DENA)”	Output pattern “71” print void quantity A	A = 4.0mm or less (A and B total: 8.0mm or less)	Shift of 0.1mm for set value 1.
Rear edge void adjustment “TAIL EDGE VOID (DENB)”	Output pattern “71” print void quantity B	B = 4.0mm or less (A and B total: 8.0mm or less)	
Side edge void adjustment “FRONT/REAR”	Output pattern “71” print void quantity C + D	C and D total: 8.0mm or less	

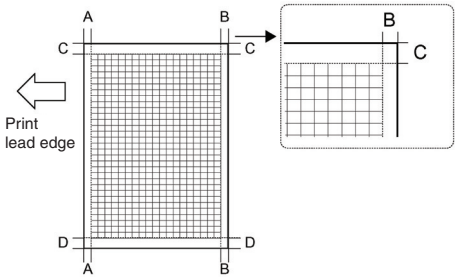

B. Adjustment on the scanner side

<1> OC scan distortion adjustment

Items which must have been completed before this adjustment.

- Adjustment on the engine side (If there is no problem in self print, no need to adjust.)

Items which must be executed after completion of this adjustment.

- OC scan off-center
- OC scan lead edge adjustment

1) Make a test chart as shown below. (Make a self-print pattern 71.)

2) Make a copy from the table glass, and check it.
   At that time, set the test chart correctly. If it is set in a distorted position, the adjustment cannot be made correctly.
3) If the output value is not in the specified range, perform the following adjustment.
4) Adjust the distortion.
   Use a level gauge to check that the scanner is installed horizontally.
   Make a copy and check it. If there is any distortion as shown in Fig. 1 or Fig. 2, loosen the scanner fixing screw (M4 x 8) and the cam A fixing screw (M3 x 12) and adjust.

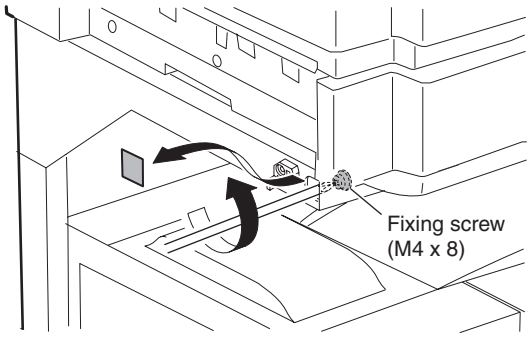

[Fig. 1]

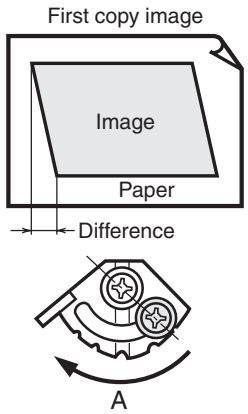

[Fig. 2]

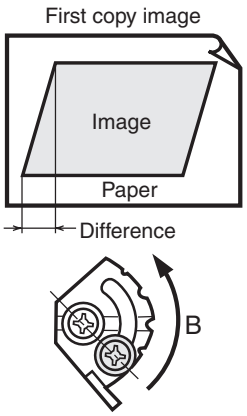

- **In the case of Fig. 1**

Shift cam A in the direction A by the difference in the copy image.

For one scale (one groove), shift by 0.5mm.

After shifting, tighten the fixing screw (M3 x 12) of cam A and make a copy again, and check the copy again to insure that there is no distortion.

- **In the case of Fig. 2**

Shift cam A in the direction B by the difference in the copy image.

For one scale (one groove), shift by 0.5mm.

After shifting, tighten the fixing screw (M3 x 12) of cam A and make a copy again, and check the copy again to insure that there is no distortion.

After adjustment, tighten the fixing screw (M3 x 12) and the scanner fixing screw (M4 x 8).

∗ If the above adjustment does not fix the problem, perform the MB rail adjustment.

∗ After the OC distortion adjustment, perform SIM53-8 SPF scanning position automatic adjustment.

<2> SPF height adjustment

Items which must have been completed before this adjustment.

- Nothing special

Items which must be executed after completion of this adjustment.

- Nothing special

1) Close the (D)SPF.
2) Check to confirm that the dove and the reference plate in the figure below are in contact with the table glass (point a) and the side guide (point b). (Place copy paper under the dove and pull it out.) If they are not in contact, adjust with the set screw.

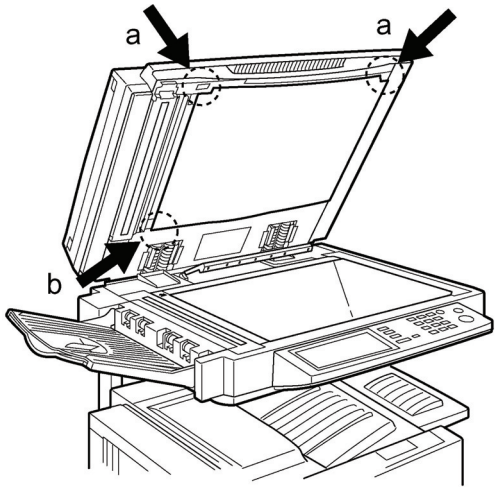

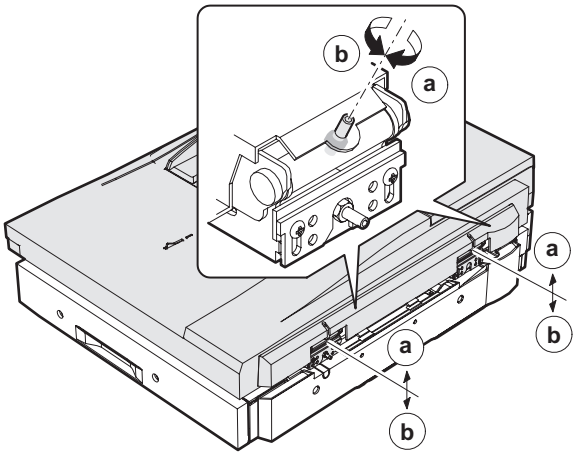

<Specification>

	Specification	Adjustment position
Distance between dove (Reference plate) and table glass	3-point contact (Left front/Left rear/Right front when viewed from the front)	Hinge adjustment set screw

<3> SPF scan distortion adjustment

Items which must have been completed before this adjustment.

- Adjustment on the engine side (If there is no problem in self print, no need to adjust.)
- OC scan distortion adjustment
- SPF height adjustment

Items which must be executed after completion of this adjustment.

- SPF off-center
- SPF lead edge adjustment
- Front/rear and left/right void amount setting

1) Make a test chart as shown below. (Print a self-print pattern 71.)
2) Make a copy with DSPF.
3) Check that it is in the specified range.

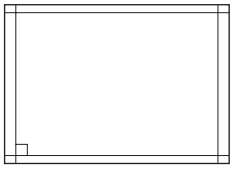

4) Execute SIM51-2 to check the SPF set value.
   Change the set value of the SPF resist amount to the following value.

7	SPF (HIGH)	60
8	SPF (LOW)	75

```
SIMULATION 51-2
RESIST TIMING ADJUSTMENT. SELECT 0-8, AND PRESS START.
0.TRAY SELECT 1  1.PRINT START
2.TRAY1 60       3.TRAY2 50  4.DESK 50
5.BPT   55       6.ADU   50
7.SPF(HIGH) 60   8.SPF(LOW) 75
                                  1
```

5) Though the SPF resist amount is the above value, if there is any distortion in SPF scan, adjust the SPF installing position in the following procedures.
6) Loosen the nut which is fixing the adjustment set screw of the hinge R, and adjust the adjustment set screw.
7) Make a copy again, and check again that the value is in the specified range.
8) Tighten the nut to fix the adjustment screw.

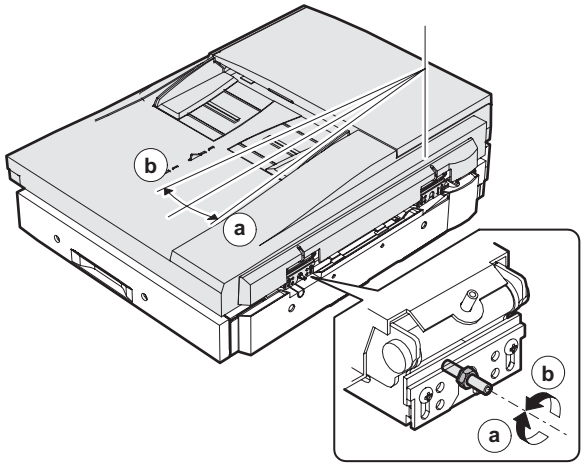

<Specification>

	Specification	Adjustment position
Skew feed	Within ±3mm	Hinge R adjustment screw

* After the SPF distortion adjustment, perform SIM53-8 SPF scanning position automatic adjustment.

<4> OC scan magnification ratio adjustment

Items which must have been completed before this adjustment.

- Adjustment on the engine side (If there is no problem in self print, no need to adjust.)
- OC scan distortion adjustment

Items which must be executed after completion of this adjustment.

- OC scan lead edge adjustment
- Original off-center adjustment

1) Place a print of self-print pattern (A3 or WLT) 70 or a scale on the table glass.
2) Close the original cover, and make a copy.
3) Check that the value is within the specification.
4) If the value is not within the specified range, execute SIM48-1 (item 3, 4).
5) Make a copy again and check again that the value is within the specification.

```
SIMULATION 48-1
MAGNIFICATION ADJUSTMENT. SELECT 0-7, AND PRESS START.
0.TRAY SELECT 1 1.PRINT START
2.MAGNIFICATION 100
3.CCD(MAIN) 50 4.CCD(SUB) 50
5.SPF(MAIN) 50 6.SPF(SUB) 50 7.CIS(MAIN) 50          2
```

<Specification>

	Specification	Adjustment position	Adjustment value
Main scan direction magnification ratio CCD (MAIN)	±0.5%	SIM48-1 (3, 4)	Set value 1: 0.1% change
Sub scan direction magnification ratio CCD (SUB)			

<5> SPF scan magnification ratio

Items which must have been completed before this adjustment.

- Adjustment on the engine side (If there is no problem in self print, no need to adjust.)
- OC scan distortion adjustment
- SPF scan distortion adjustment
- OC scan magnification ratio
- SPF height adjustment

Items which must be executed after completion of this adjustment.

- SPF scan lead edge adjustment
- Original off-center adjustment

1) Set a chart of print pattern 70 on SPF/DSPF.
2) Make a copy. (In the case of DSPF back copy, make a single copy in the duplex mode.)
3) Check that the output paper satisfies the specifications.
4) If the value is not within the specified range, execute SIM48-1 (item 5, 6).
5) Make a copy again, and check that the output paper satisfies the specifications.

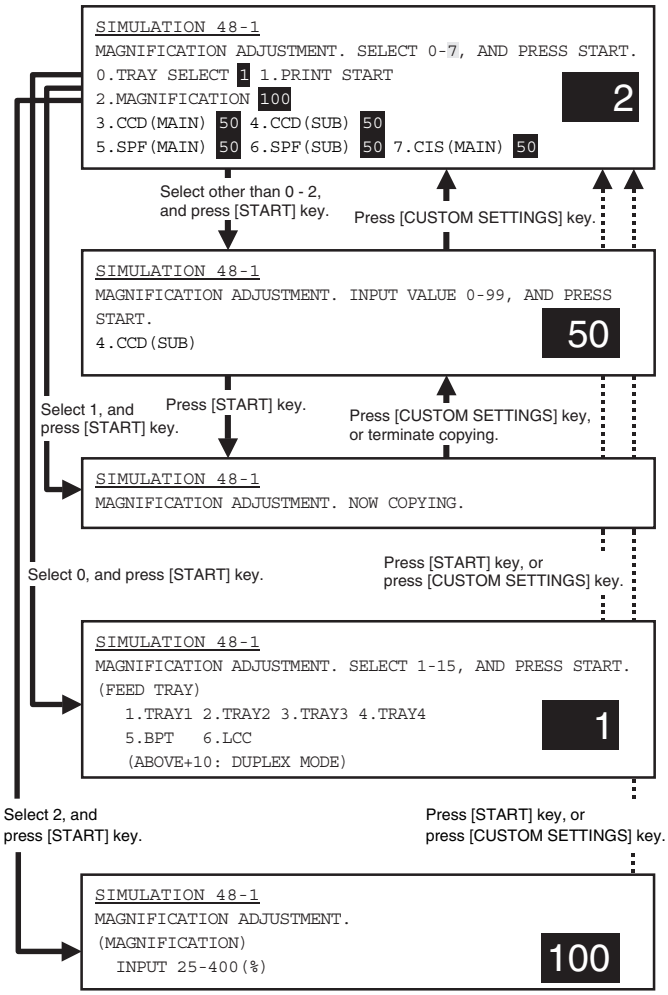

<Specifications>

	Specifications	Adjustment position	Adjustment value
SPF sub scan direction magnification ratio SPF (SUB)	±0.5%	SIM 48-1 (5, 6)	Set value 1: 0.1% change
DSPF main scan (back) direction magnification ratio CIS (MAIN)			

* The SPF main scan direction magnification ratio is common with OC.

<6> OC scan lead edge adjustment

Items which must have been completed before this adjustment.

- Adjustment on the engine side (If there is no problem in self print, no need to adjust.)
- OC scan distortion adjustment
- SPF scan distortion adjustment
- OC scan magnification ratio adjustment

Items which must be executed after completion of this adjustment.

- SPF scan lead edge adjustment
- Original off-center adjustment

1) Set an original on the original table.
2) Enter SIM 50-1.
3) Make a copy.
4) Select the number to be set on the right of the LCD, and perform the adjustment of each item.
5) Select "4: RRC-B" so that the distance between the paper lead edge and the copy image lead edge is within 4.0mm. Change the value with 10-key and perform the copy adjustment.
6) Select "5: DEN-B" so that the white spot in the latter half of copy (rear edge void) is within 4.0mm. Change the value with 10-key and perform the copy adjustment.
   (The rear void adjustment is changed by the step of 0.1mm.)
   - When the rear edge void is too small, increase the value.
   - When the rear edge void is too great, decrease the value.
7) Select "3: RRC-A," change the value with 10-key, and adjust the document scan start position.
8) Press [CA] key to cancel the simulation.

```
SIMULATION 50-1
LEAD EDGE ADJUSTMENT. SELECT 0-9, AND PRESS START.
0.TRAY SELECT 1   1.COPY START
2.MAGNIFICATION 100                                  2
(ADJUSTMENT DATA) 3.RRCA 50   4.RRCB 50 10.SIDE2 ADJ. 50
(IMAGE LOSS SETTING) 5.LEAD 15 6.SIDE 20
(VOID SETTING) 7.LEAD_EDGE(DENA) 35
               8.TRAIL_EDGE(DENB)35  9.FRONT/REAR 32
```

<Specification>

Item		Content	Specification	Set range	Default	
(Lead edge adjustment value)						
3	RRCA	Document scan start position	4.0mm or less	0 - 99	50	Set value 1: 0.1mm shift
4	RRCB	Resist roller clutch ON timing adjustment value	4.0mm or less			
10	SIDE2 ADJ.	Correction value for RRCB when refereeing from ADU		1 - 99	50	
(Image loss set value)						
5	LEAD	Lead edge image loss set value		0 - 99	15	Set value 1: 0.1mm shift
6	SIDE	Side image loss set value			20	
(Void set value)						
7	LEAD_EDGE (DENA)	Lead edge void set value	Total 8mm or less	0 - 99	35	Set value 1: 0.1mm shift
8	TRAIL_EDGE (DENB)	Rear edge void adjustment value	Total 8mm or less			
9	FRONT/ REAR	Front/Rear void adjustment value	Total 8mm or less		32	

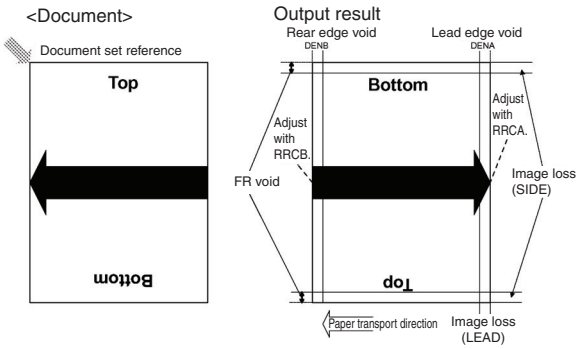

*: For output, select the right side tray.

<7> SPF scan lead edge adjustment

Items which must have been completed before this adjustment.

- Adjustment on the engine side (If there is no problem in self print, no need to adjust.)
- SPF scan distortion adjustment
- SPF scan lead edge adjustment
- SPF magnification ratio adjustment

Items which must be executed after completion of this adjustment.

- SPF/DSPF off-center adjustment

1) Make a copy of a chart which indicates the image loss amount of each side with SPF/DSPF.
2) Execute SIM50-6 and change the values.

```
SIMULATION 50-6
LEAD EDGE ADJUSTMENT(SPF). SELECT 0-10, AND PRESS
START.
0.TRAY SELECT 1   1.COPY START                       2
2.MAGNIFICATION 100
(ADJUSTMENT DATA)3.SIDE1 50 4.SIDE2 50
(IMAGE LOSS SETTING)
SIDE1: 5.LEAD_EDGE 15 6.FRONT/REAR 20  7.TRAIL_EDGE 0
SIDE2: 8.LEAD_EDGE 15 9.FRONT/REAR 20 10.TRAIL_EDGE 0
```

<Set values 1>

Item			Set range	Default
0	TRAY SELECT	Paper feed tray selection	1 - 6	–
1	COPY START	Copy START (Default)	–	–
2	MAGNIFICATION	Print magnification ratio	25 - 200%	–
(Lead edge adjustment value)				
3	SIDE1	Front surface document scan start position adjustment value	0 - 99	50
4	SIDE2	Back surface document scan start position adjustment value		
(Image loss set value: SIDE 1)				
5	LEAD_EDGE	Front surface lead edge image loss set value	0 - 99	15
6	FRONT_REAR	Front surface side edge image loss set value		20
7	TRAIL_EDGE	Front surface rear edge image loss set value	0 - 20	0
(Image loss set value: SIDE 2)				
8	LEAD_EDGE	Back surface lead edge image loss set value	0 - 99	15
9	FRONT/REAR	Back surface side edge image loss set value		20
10	TRAIL_EDGE	Back surface rear edge image loss set value	0 - 20	0

<Display values 1>

Normal display		NOW COPYING
ERROR display	Door open	DOOR OPEN.
	Jam	JAM
	Paper empty	PAPER EMPTY.

<Set values 2>

1	TRAY1
2	TRAY2
3	TRAY3
4	TRAY4
5	Manual feed

∗ With the above + 10, the SPF enters the duplex mode (DD), making duplex copy.

<Set values 3>

Set range	25 - 200%

<8> Original off-center adjustment

Items which must have been completed before this adjustment.

- Adjustment on the engine side (If there is no problem in self print, no need to adjust.)
- OC scan distortion adjustment
- SPF scan distortion adjustment
- OC scan magnification ratio
- SPF scan lead edge adjustment

Items which must be executed after completion of this adjustment.

- Nothing special

1) Set an original on the original table.
2) Execute SIM 50-12.
3) Select the paper feed tray and the magnification ratio.
4) After entering the adjustment value, pres START key, and printing is started.
5) Check the off-center (distance from the paper lead edge) of the printed copy. Repeat procedure 2 until the printed copy satisfies the specifications.

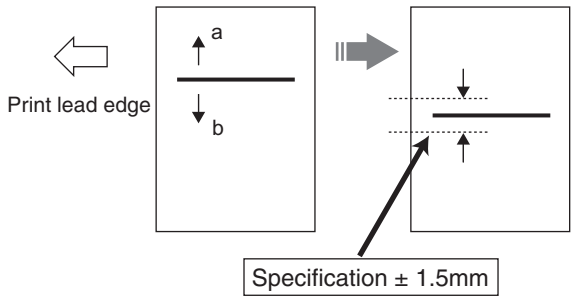


```
SIMULATION 50-12
ORIGINAL OFF-CENTER ADJUSTMENT. SELECT 0-9, AND PRESS
START.
0.TRAY SELECT 1   1.COPY START                    2
2.MAGNIFICATION 100
(ADJUSTMENT DATA)
3.PLATEN 50 4.SPF SIDE1 50 5.SPF SIDE2 50
```

	Adjustment position		Measurement reference	Specification	Set value		
					Default	Range	
Original off-center SIM50-12	PLATEN	OC mode	Copy output center line	As shone in the table below.	50	0 – 99	Set value 1:0.1mm shift
	SPF SIDE1	SPF front surface adjustment					
	SPF SIDE2	SPF back surface adjustment					

- For the duplex mode (Single → Duplex), add 10 to the above set value.
- When the print line is shifted toward a from the paper center, decrease the value.
- When the print line is shifted toward b from the paper center, increase the value.

<Specifications>

Machine (OC mode)	Single	±1.5mm
	Duplex	±1.7mm
Overall (DSPF)	Single S - S	±2.8mm
	Single D - S	±3.5mm
	Duplex S - D	±3.0mm
	Duplex D - D	±3.5mm

3. Scanner section

A. OC scan distortion adjustment (MB-B rail height adjustment)

- This adjustment requires a high-level preciseness.
  It is easier to perform the scanner unit distortion adjustment previously described.

Before performing this adjustment, the following adjustment must have been completed.

- LSU right angle adjustment

1) Make a test chart as shown below. (Print a self-print pattern 71.)

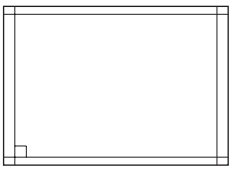

2) Make a copy from the table glass, and check it.
   At that time, set the test chart correctly. If it is set in a distorted position, the adjustment cannot be made correctly.
3) If the output value is not in the specified range, perform the following adjustment.
4) Remove the front cabinet in front of the scanner, and check that installing position of the MB rail.
5) Loosen the screw at the right of the MB rail to adjust.

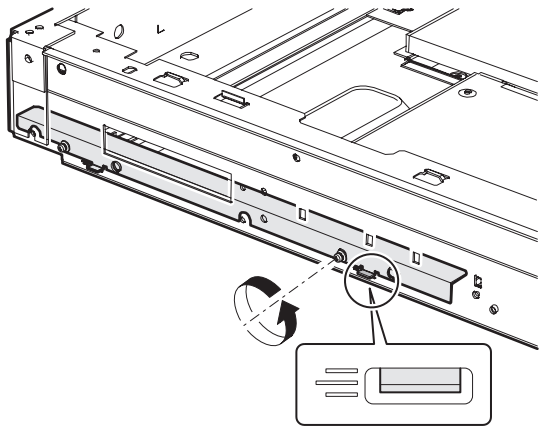

<Specifications>

Measurement point	Specification	Set value	
OC scan distortion adjustment	Angle θ in the above figure	θ = 90°±0.13°	1 scale = about 0.25°shift in θ

B. Vertical image distortion balance adjustment (Copy lamp unit installing position adjustment)

1) Insert the front/rear mirror base drive wire into the frame groove and press and fix it with the wire holder. At that time, do not tighten the wire fixing screw. Change the direction of the lamp positioning plate. (F and R)
2) Push the copy lamp unit onto the positioning plate, and tighten the wire fixing screw.

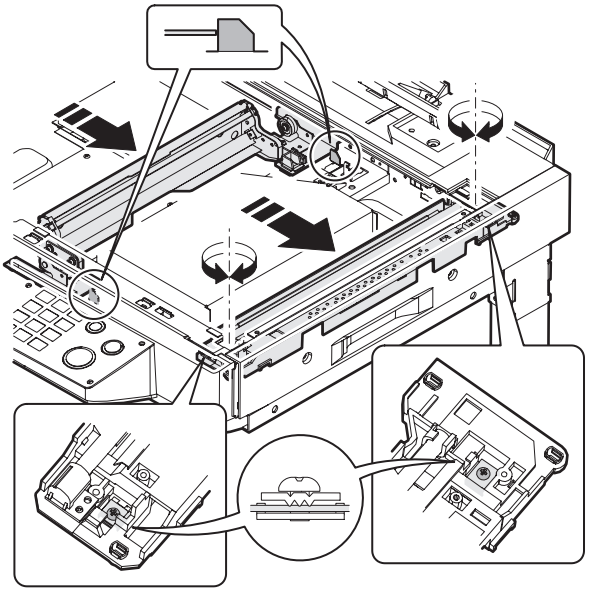

<Note for assembling the copy lamp unit>

After fixing, manually shift the copy lamp unit a few times to check that it moves smoothly.

C. Vertical image distortion balance adjustment (No. 2/3 mirror base unit installing and position adjustment)

This adjustment is to adjust the parallelism of the mirror base to the OPC drum surface and the original surface.

1) Manually turn the mirror base drive pulley to bring mirror base B into contact with mirror base positioning plate.
   If, at that time, the front frame side and the frame side of mirror base B are brought into contact with the mirror base positioning plate simultaneously, the parallelism is correct and there is no need for adjustment.

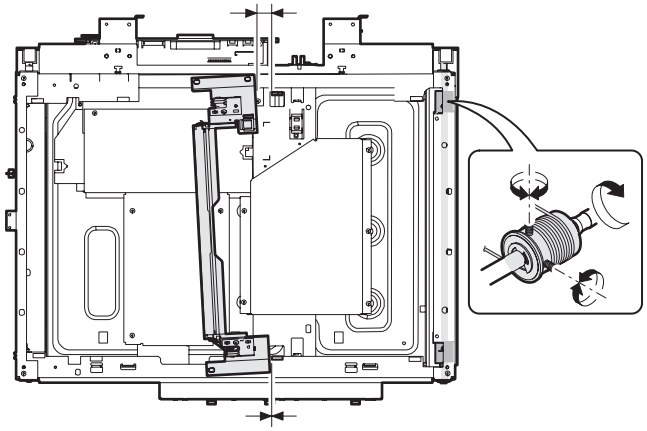

D. Vertical (sub scanning direction) distortion adjustment [Winding pulley position adjustment]

This adjustment is executed in the following cases:

- When the mirror base drive wire is replaced.
- When the lamp unit, or No. 2/3 mirror holder is replaced.
- When a copy shown below is made.

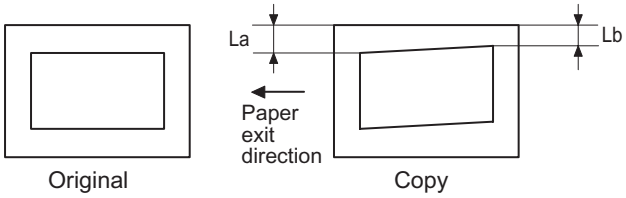

1) Set A3 white paper on the original table as shown below.

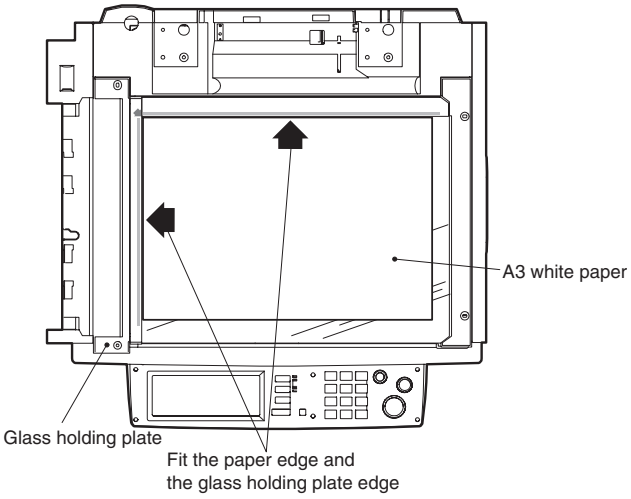

2) With the original cover open, make a normal (X 1.0) copy.
3) Measure the black distance at the lead edge and the rear edge of the copy paper.

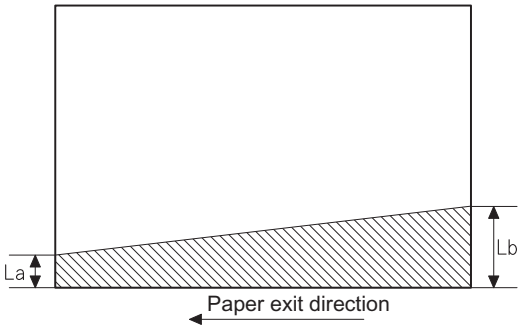

La : Lead edge black background section
Lb : Rear edge black background section

If La = Lb, the procedures 4) through 7) are not required.

4) Loosen the fixing screw of the front or the rear frame mirror base drive pulley.

- If La < Lb, turn the rear frame mirror base drive pulley in direction B.
  (Do not move the mirror base drive pulley shaft.)
- If La > Lb, turn the rear frame mirror base drive pulley in direction A.
  (Do not move the mirror base drive pulley shaft.)

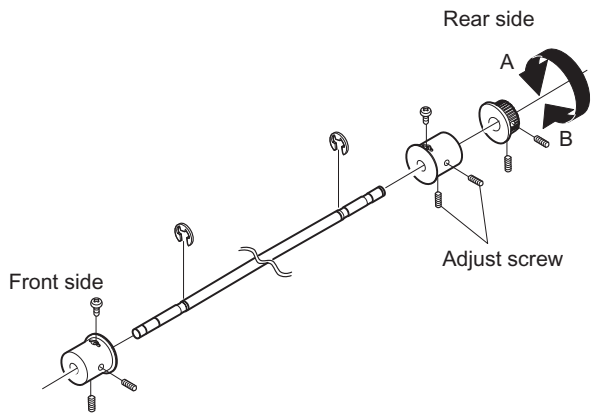

5) Tighten the fixing screw of the mirror base drive pulley.
6) Perform procedures 1) through 3).
7) If La is not equal to Lb, perform procedures 4) and 5).
   If La = Lb, the adjustment is completed.
   Repeat procedures 1) through 6) until La = Lb.

E. Height adjustment of original detection light emitting unit

1) Execute SIM 41-3.
2) Open the original cover. Press the original detection light-emitting unit gradually with your finger to check the height at which OCSW display on the LCD is highlighted.

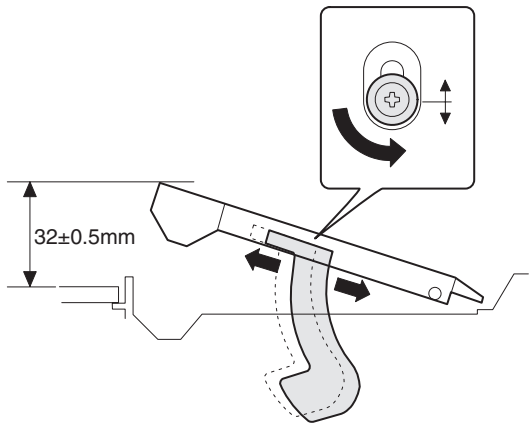

3) Open the original detection light-emitting unit gradually to check the height at which OCSW display turns to the normal state.
4) If the heights are out of the specified range in procedures 2) and 3), adjust the height of the original detection light emitting unit by shifting the adjustment screw.

```
SIMULATION 41-3
PD SENSOR DATA DISPLAY.
OCSW
PD1[128]: 200      PD2[128]: 200
PD3[128]:  50      PD4[128]:  52
PD5[128]:  51      PD6[128]:  50
PD7[128]:  52
```

5) After completion of adjustment, press the original detection light emitting unit fully downward with your finger and release it. Check that the original detection light-emitting unit moves up smoothly.

<Specification>

	Specification	Adjustment position	
Original size detection position	32±0.5mm	Height adjustment screw	SIM 41-3

F. Original size detection photo sensor check

1) Execute SIM 41-1.
2) Put A3 (or WLT) paper on the table glass, and check that all the sensor displays (except for OCSW) on the LCD are highlighted.
3) Gradually move the unit to the left, and check that the highlighted sensor displays turn off one by one sequentially.

```
SIMULATION 41-1
PD SENSOR CHECK..
OCSW  PD1  PD2  PD3  PD4  PD5  PD6  PD7

                (検知センサーを反転表示)
```

G. Original size detection photo sensor adjustment

1) Execute SIM 41-2.
   ∗ At that time, check that the scanner mirror base is at the home position.
2) Open the document cover. Select 1 without placing paper on the table glass, and press START.
3) When COMPLETE is displayed on the LCD, press CUSTOM SETTING to return to the initial screen.
4) Place A3 (or WLT) paper on the table glass, select 2 and press START.
   When COMPLETE is displayed, the adjustment is normally completed.

∗ If ERROR is displayed, the error PD sensor is displayed.

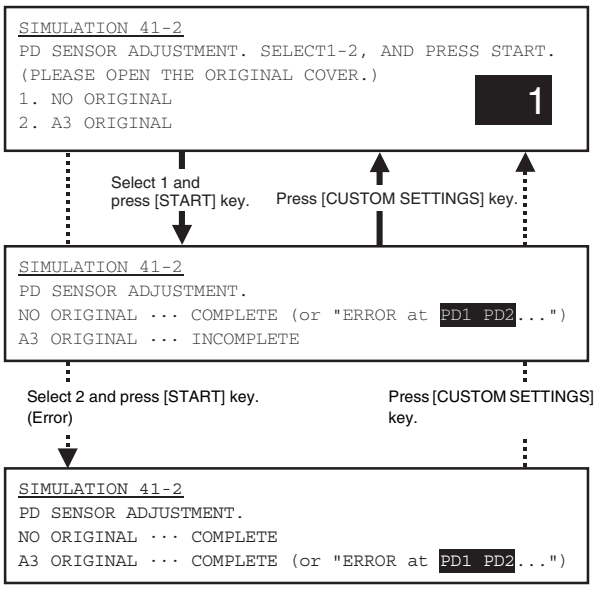

<Specification>

	Specification	Adjustment
Document size detection photo sensor adjustment	COMPLETE	SIM 41-2

H. Image density adjustment

The image density adjustment is required for the following copy quality mode by using the simulation.

There are two methods; the collective adjustment and the individual adjustment of the copy quality mode.

- Copy mode

Copy quality mode Collective		Adjustment	Individual adjustment
Binary value mode	Auto mode	SIM46-2	
	Character mode		SIM46-9
	Character/Photo mode		SIM46-10
	Photo mode		SIM46-11

- FAX mode

			Adjustment	Individual adjustment
Normal mode	Binary value mode	AUTO	SIM46-12	SIM46-13
		EXP1.0		
		EXP2.0		
		EXP3.0		
		EXP4.0		
		EXP5.0		
Small text mode	Binary value mode	AUTO		SIM46-14
		EXP1.0		
		EXP2.0		
		EXP3.0		
		EXP4.0		
		EXP5.0		
	Half tone mode	AUTO		
		EXP1.0		
		EXP2.0		
		EXP3.0		
		EXP4.0		
		EXP5.0		
Fine mode	Binary value mode	AUTO		SIM46-15
		EXP1.0		
		EXP2.0		
		EXP3.0		
		EXP4.0		
		EXP5.0		
	Half tone mode	AUTO		
		EXP1.0		
		EXP2.0		
		EXP3.0		
		EXP4.0		
		EXP5.0		
Super fine mode	Binary value mode	AUTO		SIM46-16
		EXP1.0		
		EXP2.0		
		EXP3.0		
		EXP4.0		
		EXP5.0		
	Half tone mode	AUTO		
		EXP1.0		
		EXP2.0		
		EXP3.0		
		EXP4.0		
		EXP5.0		
600dpi mode	Binary value mode	AUTO		SIM46-45
		EXP1.0		
		EXP2.0		
		EXP3.0		
		EXP4.0		
		EXP5.0		
	Half tone mode	AUTO		
		EXP1.0		
		EXP2.0		
		EXP3.0		
		EXP4.0		
		EXP5.0		

(1) Copy mode

a. Test chart setting

1) Place a test chart (UKOG-0162FCZZ) on the original table as shown below.
2) Place several sheets of A3 (11 x 17) white paper (Sharp's specified paper) on the test chart at the rear reference.

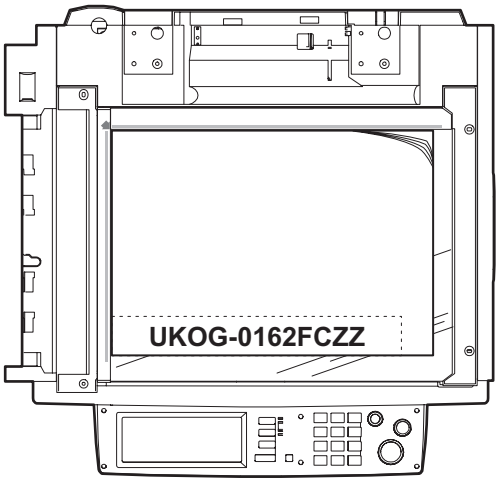

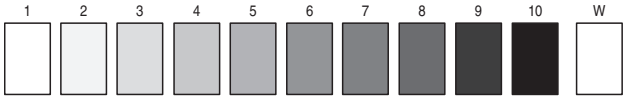

Test chart comparison

UKOG-0162FCZZ DENSITY No.	1	2	3	4	5	6	7	8	9	10	W
UKOG-0089CSZZ DENSITY No.	0.1		0.2		0.3				0.5	1.9	0
KODAK GRAY SCALE		1		2		3		4		19	A
SHARP CORPORATION MADE IN JAPAN											

b. Density adjustment procedure

<1> Collective adjustment of two or more copy quality modes

Normally this adjustment is performed with SIM 46-2. In this method, two or more copy density adjustments in different modes can be adjusted collectively.

1) Execute SIM 46-2.

(Binary value mode)

Quality mode	Linked simulation data
AE3.0 (AE)	
CH3.0 (Character)	SIM46-9
MIX3.0 (Character/Photo)	SIM46-10
PH3.0 (Photo)	SIM46-11

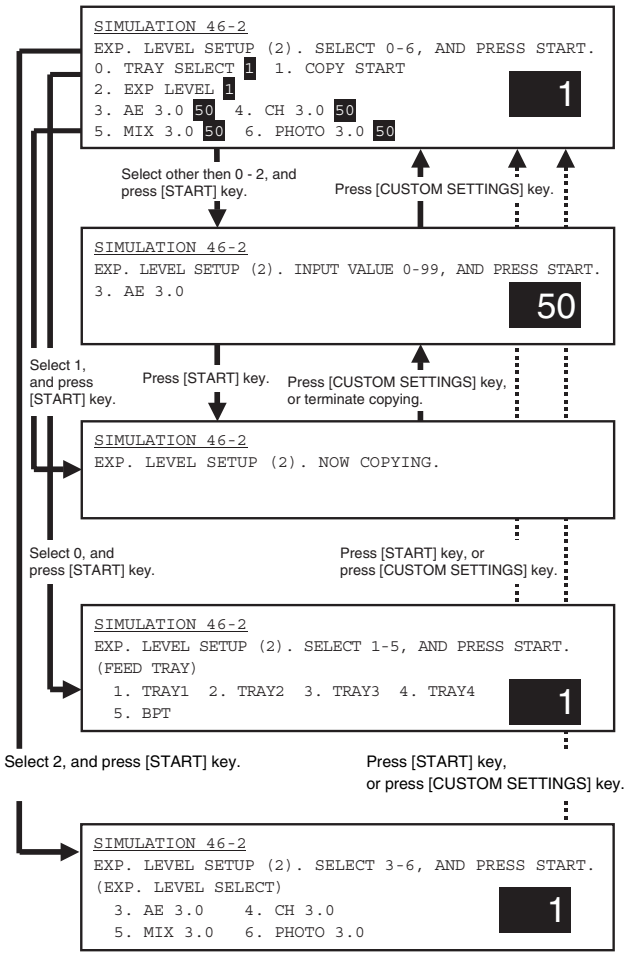

2) Press the COPY button to make a copy.

Check that the copy density is as shown in the table below.

If not, change the adjustment value.

- Adjustment spec

Mode	EXP.	Chart No.	Adjustment level	Chart No.	Adjustment level
Character	3	3	Copied	2	Not copied
Character/ Photo	3	3	Copied	2	Not copied
Photo	3	3	Copied	2	Not copied
Auto		3	Copied	2	Not copied

If the copy density is too light, increase the adjustment value.

If the copy density is too dark, decrease the adjustment value.

Adjustment range: 30 - 170

<2> Individual adjustment of each copy quality mode

This adjustment is used when a different density level for different copy quality mode is required. SIM 46-5 to -7 and SIM 46-9 to -11 are used.

1) Execute the simulation corresponding to the copy quality mode to be adjusted.

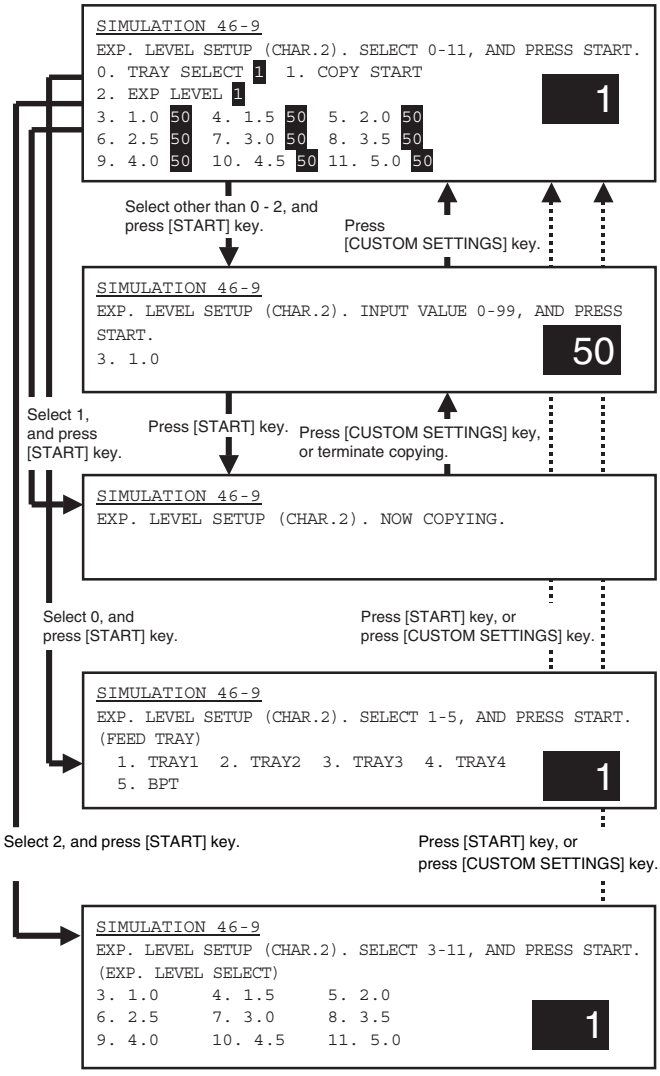

2) Press the COPY button to make a copy

Check that the copy density is as shown in the table below. If not, change the adjustment value.

For the auto mode, there is only one adjustment value. For the other modes, the adjustment value for each density level must be adjusted.

(2) Adjusting the print quality in fax mode

This adjustment is needed in the following situations:

- The CCD unit has been replaced.
- U2 trouble has occurred.
- The MFP control PWB has been replaced.
- The EEPROM on the MFP control PWB has been replaced.
- The scanner control PWB has been replaced.
- The EEPROM on the scanner control PWB has been replaced.
- One or more parts of the scanner (reading) section have been replaced.

(Fax mode image density adjustment items)

Image mode			Simulation for adjustment	
			All-mode adjustment	Individual-mode adjustment
Fax mode print density adjustment (standard mode)	Auto mode	Binary mode	46-12	46-13
	Manual	Binary mode		
Fax mode print density adjustment (small-character mode)	Auto mode	Binary mode		46-14
		Half tone mode		
	Manual	Binary mode		
		Half tone mode		
Fax mode print density adjustment (fine mode)	Auto mode	Binary mode		46-15
		Half tone mode		
	Manual	Binary mode		
		Half tone mode		
Fax mode print density adjustment (super fine mode)	Auto mode	Binary mode		46-16
		Half tone mode		
	Manual	Binary mode		
		Half tone mode		
Fax mode print density adjustment (600dpi mode)	Auto mode	Binary mode		46-45
		Half tone mode		
	Manual	Binary mode		
		Half tone mode		

(Fax mode density)

The print density settings should be normally left at defaults but should be adjusted according to user requests, if any.

a. Adjust the fax mode print density for all modes at once

1) Set the test chart (UKOG-0162FCZZ) on the original table so that it aligns with the front frame. Then put four or five pieces of A3 (11" x 17") paper .

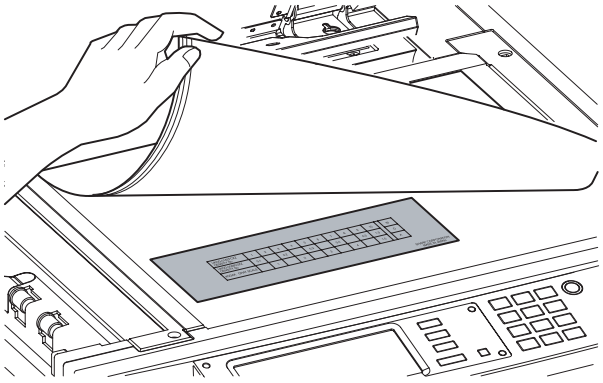

2) Go through the modes specified in Simulation 46-12.

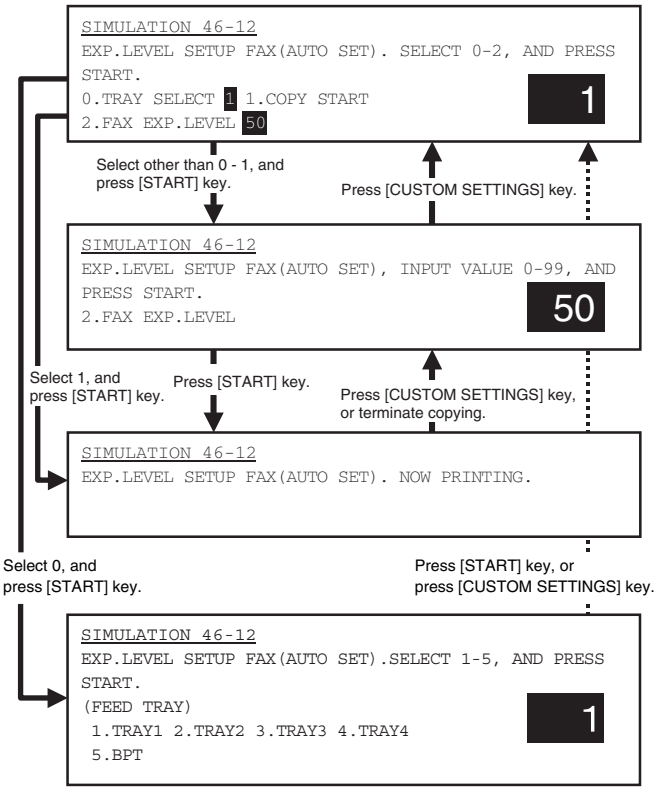

Item			Set range	Default
0	TRAY SELECT	Paper feed tray selection		
1	COPY START	Copy START (Default)		
2	FAX EXP. LEVEL	FAX mode print density	0 - 99	50

3) Select the adjustment item (FAX EXP. LEVEL) using the numeric keypad.
4) Press the Start key.
5) Press the Start key (A copy is created.)

   Check the print density.

   If the print density is not at an acceptable level, do the following steps.
6) Enter the print adjustment value using the numeric keypad.
7) Press the P or Start key

   This applies the adjustment value.

   Pressing the Start key starts print operation as well as applying the adjustment value.
8) Check the print density.

Repeat steps 6 to 8 until an acceptable print density is obtained.

Note: Adjusting the Fax print density through this simulation changes the print density settings for all Fax modes to the density level applied by carrying out this simulation.
The Fax mode print density settings for individual Fax modes adjusted through Simulations 46-13, -14, -15, -16 and -45 are changed to the print density level applied by this simulation.

b. Adjust the fax mode print density (standard mode/ small-character mode/super fine mode/600dpi mode)

This adjustment is intended to the print mode for each Fax mode individually. In manual mode, the print density setting for each print density adjustment level (1 to 5) can be adjusted to a custom density level.

1) Set the test chart (UKOG-0162FCZZ) on the original table so that it aligns with the front frame. Then put four or five pieces of A3 (11" x 17") paper .

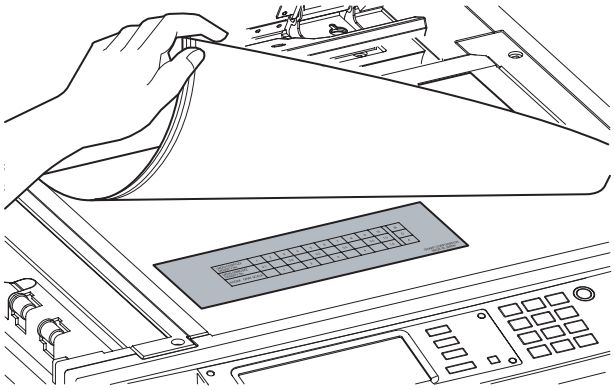

2) Go through the simulation modes that correspond to the Fax modes for which to adjust the print density (i.e., the modes specified in Simulations 46-13, -14, -15, -16, or -45).

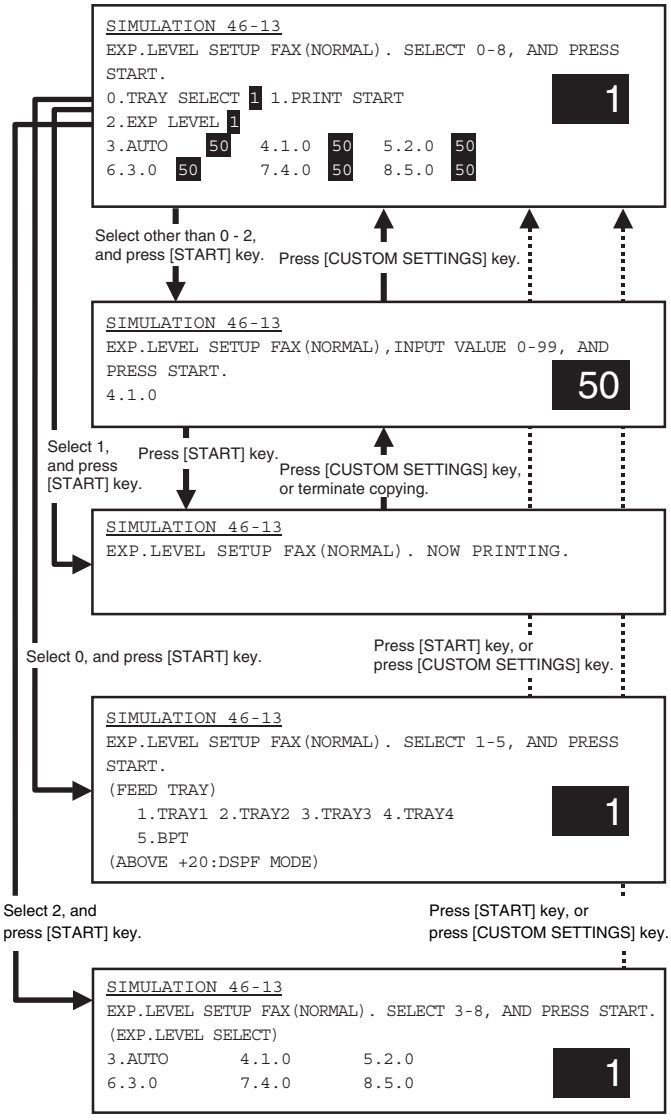

	Item		Set range	Default
0	TRAY SELECT	Paper feed tray selection		
1	PRINT START	Print start (Default)		
2	EXP LEVEL	Exposure level selection		
3	AUTO	Auto	0 - 99	50
4	1.0	Exposure level 1		
5	2.0	Exposure level 2		
6	3.0	Exposure level 3		
7	4.0	Exposure level 4		
8	5.0	Exposure level 5		

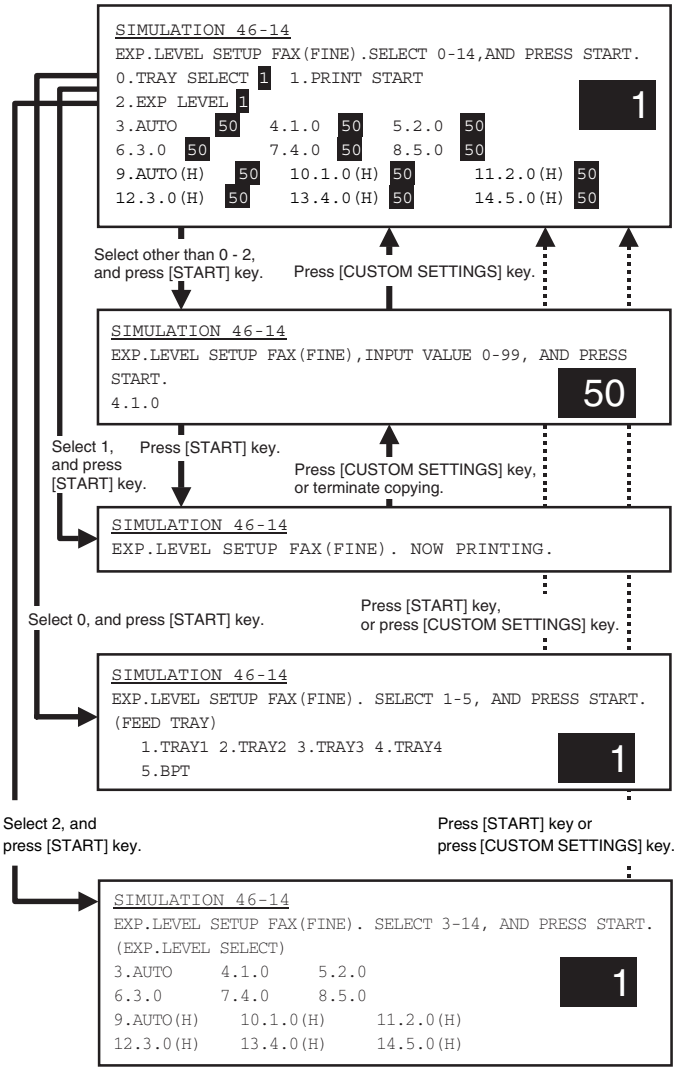

Item			Set range	Default
0	TRAY SELECT	Paper feed tray selection		
1	PRINT START	Print start (Default)		
2	EXP LEVEL	Exposure level selection		
3	AUTO	Auto	0 - 99	50
4	1.0	Exposure level 1		
5	2.0	Exposure level 2		
6	3.0	Exposure level 3		
7	4.0	Exposure level 4		
8	5.0	Exposure level 5		
9	AUTO (H)	Auto (Half-tone)		
10	1.0 (H)	Exposure level 1 (Half-tone)		
11	2.0 (H)	Exposure level 2 (Half-tone)		
12	3.0 (H)	Exposure level 3 (Half-tone)		
13	4.0 (H)	Exposure level 4 (Half-tone)		
14	5.0 (H)	Exposure level 5 (Half-tone)		

3) Using the numeric keypad, select the number that corresponds to the adjustment item. Choose from numbers 3 to 8 (14).
   - Auto mode
   - Manual mode (print density adjustment level)

   For manual mode, select the number that corresponds to the print density level (1 to 5). (Choose from numbers (4 to 8) (10-14)).
4) Press the Start key
5) Press the Start key. (A copy is created.)

I. DSPF width detection adjustment

(1) When replacing DSPF unit

1) Use SIM53-7 to enter the value indicated on the side of the right hinge of the DSPF unit.

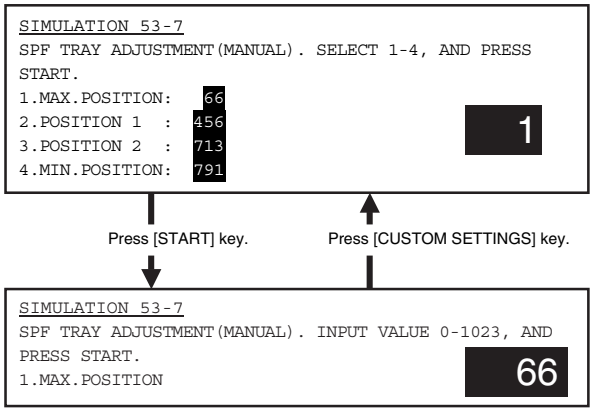

(2) When replacing the original width detection volume.

Execute SIM53-6 to perform the machine DSPF original tray size adjustment.

1) Extend the guide to MAX. position, select 1, and press START. When COMPLETE is displayed, press CUSTOM SETTING to return to the initial screen.
2) Move the guide to A4R position, select 2, and press START. When COMPLETE is displayed, press CUSTOM SETTING to return to the initial screen.
3) Move the guide to A5R position, select 3, and press START. When COMPLETE is displayed, press CUSTOM SETTING to return to the initial screen.
4) Move the guide to MIN. position, select 4, and press START. When COMPLETE is displayed, the adjustment is completed.

If ERROR is displayed in procedures 1) - 4), repeat the adjustment again.

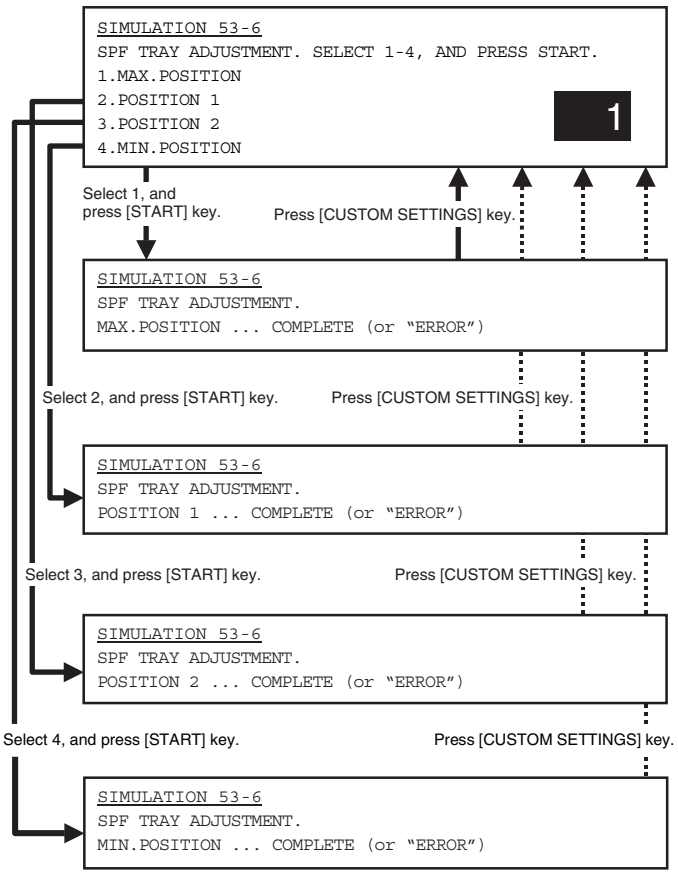

[9] SIMULATION

1. Outline and purpose

The simulation has the following functions to grasp the machine operating status, identify the trouble position and causes in an earlier stage, and make various setups and adjustments speedily for improving the serviceability of the machine.

1) Various adjustments
2) Setup of specifications and functions
3) Canceling troubles
4) Operation check
5) Various counters check, setup, and clear
6) Machine operating status (operation history) data check, clear
7) Transfer of various data (adjustments, setup, operations, counters)

The operating procedures and the displays differ depending on the form of the operation panel of the machine.

2. Code-type simulation

A. Operating procedures and operations

∗ Entering the simulation mode

1) Copy mode key ON → Program key ON → Asterisk (*) key ON → CLEAR key ON → Asterisk (*) key ON → Ready for input of a main code of simulation
2) Entering a main code with the 10-key → START key ON
3) Entering a sub code with the 10-key → START key ON
4) Select an item with the scroll key and the item key.
5) The machine enters the mode corresponding to the selected item.

   Press START key or EXECUTE key to start the simulation operation.

   To cancel the current simulation mode or to change the main code and the sub code, press the user setup key.

∗ Canceling the simulation mode to return to the normal mode

1) Press CA key.

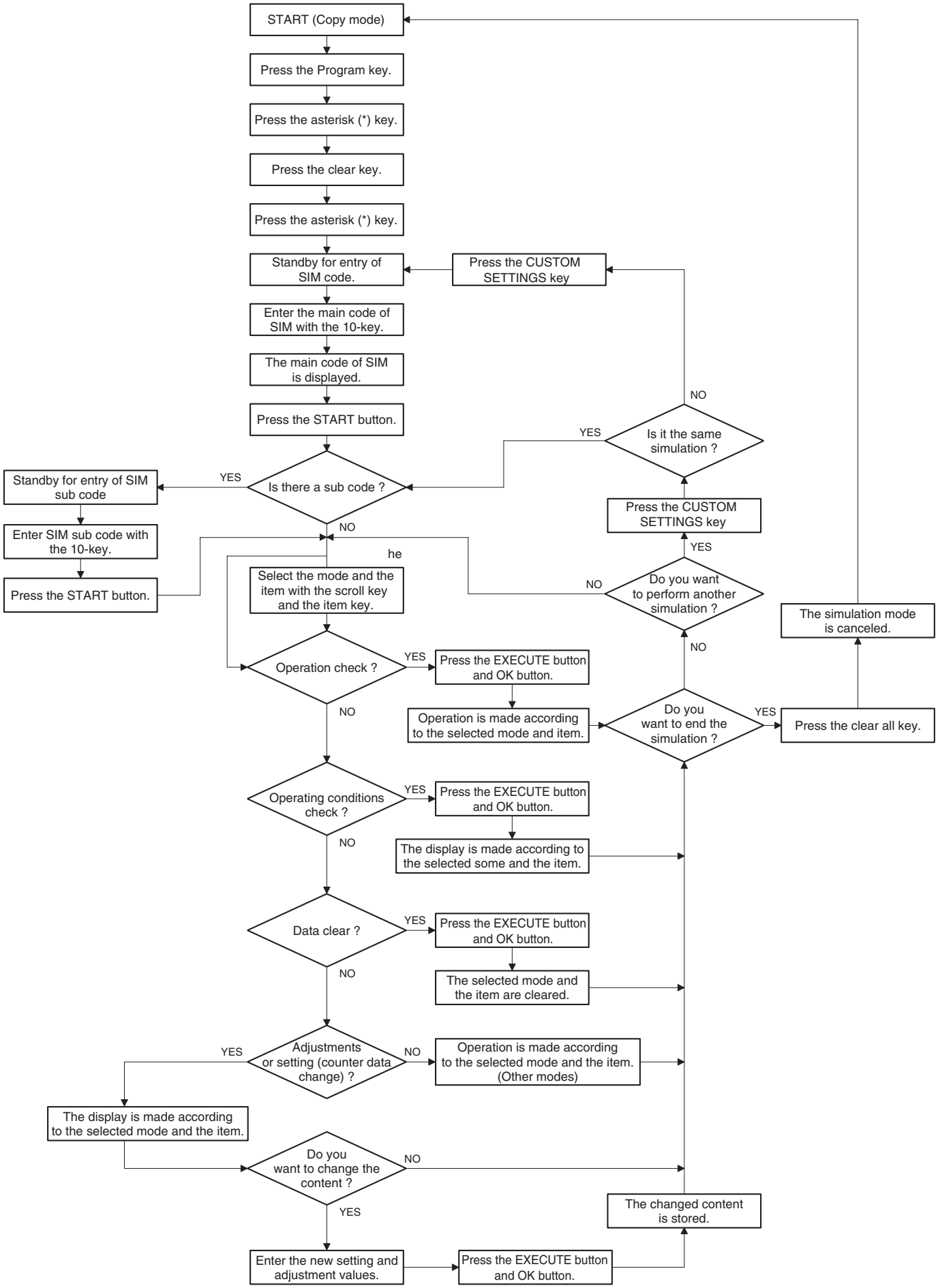
START (Copy mode)
Press the Program key.
Press the asterisk (*) key.
Press the clear key.
Press the asterisk (*) key.
Standby for entry of SIM code.
Press the CUSTOM SETTINGS key
Enter the main code of SIM with the 10-key.
The main code of SIM is displayed.
Press the START button.
NO
YES
Is it the same simulation ?
Standby for entry of SIM sub code
YES
Is there a sub code ?
Enter SIM sub code with the 10-key.
NO
Press the CUSTOM SETTINGS key
YES
he
Press the START button.
Select the mode and the item with the scroll key and the item key.
NO
Do you want to perform another simulation ?
The simulation mode is canceled.
NO
Operation check ?
YES
Press the EXECUTE button and OK button.
NO
Operation is made according to the selected mode and item.
Do you want to end the simulation ?
YES
Press the clear all key.
Operating conditions check ?
YES
Press the EXECUTE button and OK button.
NO
The display is made according to the selected some and the item.
Data clear ?
YES
Press the EXECUTE button and OK button.
NO
The selected mode and the item are cleared.
YES
Adjustments or setting (counter data change) ?
NO
Operation is made according to the selected mode and the item. (Other modes)
The display is made according to the selected mode and the item.
Do you want to change the content ?
NO
YES
The changed content is stored.
Enter the new setting and adjustment values.
Press the EXECUTE button and OK button.

B. Simulation list

(1) Main/ Sub

Code		Function (Purpose)
Main	Sub	
1	1	Used to check the operations of the scanner (read) unit and its control circuit.
	2	Used to check the operation of sensor and detector in the scanning (read) section and the related circuit.
2	1	Used to check the operations of the automatic document feeder unit and the control circuit.
	2	Used to check the operations of the sensors and detectors in the automatic document feeder unit and the related circuits.
	3	Used to check the operations of the loads in the automatic document feeder unit and the control circuits.
3	2	Used to check the operation of sensor and detector in the finisher and the related circuit.
	3	Used to check the operation of the load in the finisher and the control circuit.
	6	Used to adjust the stacking capacity of the finisher. (Used to adjust the alignment plate (jogger) stop position in the finisher paper width direction. The adjustment is made by changing the alignment plate home position in the paper width direction by software.)
	10	Console finisher (AR-FN7) adjustment
	20	Used to check the mail bin stacker sensor.
	21	Used to check the operations of the mail bin stacker loads.
4	2	Used to check the operations of the sensors and detectors in the paper feed section (desk paper feed/large capacity tray) and the related circuit.
	3	Used to check the operations of the loads in the paper feed section (desk paper feed/large capacity tray) and the related circuit.
5	1	Used to check the operation of the display, LCD in the operation panel, and control circuit.
	2	Used to check the operation of the heater lamp and the control circuit.
6	1	Used to check the operation of the paper transport system loads and the control circuit.
	2	Used to check the operations of each fan motor and its control circuit.
7	1	Used to set the operating conditions of aging.
	6	Used to set the intermittent aging cycle.
	8	Used to set the warm-up time display YES/NO.
8	1	Used to check and adjust the operations of the developing voltage of each color and the control circuit.
	2	Used to check and adjust the operation of the main charger grid voltage in each printer mode and the control circuit.
	6	Used to check and adjust the operation of the transfer voltage and the control circuit.
	17	Used to check and adjust the operation of the transfer voltage and the related circuit. (Transfer belt cleaning mode)
9	1	Used to check and adjust the operation of the load (clutch/solenoid) in the duplex section and the control circuit.
	2	Used to check the operations of the sensors and detectors in the duplex section and its control circuit.
10	1	Used to check the operations of the toner motor and the related circuit.

Code		Function (Purpose)
Main	Sub	
13	0	Used to cancel the self-diag "U1" trouble. (Only when FAX is installed.)
14	0	Used to cancel excluding the self-diag U1/LCC/ U2/PF troubles.
15	0	Used to cancel the self-diag "U6-01, 02, 03, F3-12, 22" (large capacity paper feed tray, paper feed trays 1, 2) troubles.
16	0	Used to cancel the self-diag U2 troubles.
17	0	Used to cancel the PF troubles (when the copy inhibit command from the host computer is received).
21	1	Used to set the maintenance cycle.
22	1	Used to check the print count value in each section and each operation mode. (Used to check the maintenance timing.)
	2	Used to check the total numbers of misfeed and troubles. (When the number of misfeed is considerably great, it is judged as necessary for repair. The misfeed rate is obtained by dividing this count value with the total counter value.)
	3	Used to check misfeed positions and the misfeed count of each position. (If the misfeed count is considerably great, it may be judged as necessary to repair.)
	4	Used to check the trouble (self diag) history.
	5	Used to check the ROM version of each unit (section).
	6	Used to output the list of the setting and adjustment data (simulations, FAX soft switch, counters).
	7	Used to display the key operator code. (This simulation is used when the customer forgets the key operator code.)
	8	Used to check the number of use of the finisher, the SPF, and the scan (reading) unit.
	9	Used to check the number of use (print quantity) of each paper feed section.
	10	Used to check the system configuration (option, internal hardware).
	11	Used to check the use frequency (send/receive) of FAX. (Only when FAX is installed)
	12	Used to check the SPF misfeed positions and the number of misfeed at each position. (When the number of misfeed is considerably great, it can be judged as necessary for repair.)
	13	Used to check the operating time of the process section (OPC drum, DV unit, toner bottle).
	19	Used to check the values of the counters related to the scan mode and the internet FAX mode.
23	2	Used to check the trouble history of paper jam and misfeed. (If the number of misfeed and troubles is considerably great, it may be judged as necessary to repair.)
	80	Used to check the operations of the sensors and detectors in the paper feed and transport section.
24	1	Used to clear the misfeed counter, the misfeed history, the trouble counter, and the trouble history. (The counters are cleared after completion of maintenance.)
	2	Used to clear the number of use (the number of prints) of each paper feed section.
	3	Used to clear the number of use of the finisher, SPF, and the scan (reading) unit.
	4	Used to reset the maintenance counter.
	5	Used to reset the developer counter. (The developer counter of the DV unit which is installed is reset.)

Code		Function (Purpose)
Main	Sub	
24	6	Used to reset the copy counter.
	7	Used to clear the OPC drum counter. (Perform this simulation when the OPC drum is replaced.)
	9	Used clear the printer mode print counter and the self print mode print counter.
	10	Used to clear the FAX counter. (Only when FAX is installed)
	11	Used to reset the OPC drum rotation time, and the DV unit rotation time counter. The developer counter in the DV unit installed is reset.
	15	Used to clear the counters related to the scan mode and the internet FAX mode.
25	1	Used to check the operations of the developing section (toner concentration, humidity and toner concentration sensor, humidity sensor, temperature sensor output can be monitored.)
	2	Used to make the initial setting of toner concentration when replacing developer.
26	3	Used to set the specifications of the auditor. Setting must be made according to the auditor use conditions.
	5	Used to set the count mode of the total counter and the maintenance counter.
	6	Used to set the specifications (paper, document detection, etc.) of the destination.
	10	Used to set the network scanner trial mode.
	18	Used to set YES/NO of toner save operation. (This function is valid only in Japan and UK versions. (Depends on the destination setting of SIM26-6.) For the other destinations, the same setting can be made by the user program P22.)
	30	Used to set the operation mode conforming to the CE mark (Europe safety standards). (Conforming to soft start when driving the fusing heater lamp.)
	35	Used to set whether the same continuous troubles are displayed as one trouble or the series of troubles with SIM 22-4 when the same troubles occur continuously.
	38	Used to set CONTINUE/STOP of printing when maintenance timing is over and the count value reaches 110% of replacement timing (life).
	41	Used to set the automatic magnification ratio selection (AMS) in the pamphlet mode.
	50	Black-White reverse YES/NO setting
	52	Used to set whether non-print paper (insertion paper, cover paper) (blank image print paper) is counted up or not.
	68	Used to set ENABLE/DISABLE of the CA key cancel function of print stop.
27	1	Used to set the specifications for operations in case of communication trouble between the host computer and MODEM (machine side). (When communication trouble occurs between the host computer MODEM and the machine, the self diag display (U7-00) is printed and setting for inhibition of print or not is made.)
	5	Used to enter the machine tag No. (This function allows to check the tag No. of the machine with the host computer.)
30	1	Used to check the operation of sensors and detectors in other than the paper feed section and the operations of the related circuits.
	2	Used to check the operation of sensors and detectors in the paper feed section and the related circuits.

Code		Function (Purpose)
Main	Sub	
40	1	Used to check the operation of the manual feed tray paper size detector and the related circuit. (The operation of the manual feed tray paper size detector can be monitored with the LCD display.)
	2	Used to adjust the manual paper feed tray paper width detector detection level.
	7	Used to enter the manual paper feed tray paper width adjustment value.
	11	Used to check the multi-purpose tray width detection adjustment value.
	12	Used to check the multi-purpose tray width detection adjustment value.
41	1	Used to check the operation of the document size sensor and the related circuit. (The operation of the document size sensor can be monitored with the LCD display.)
	2	Used to adjust the document size sensor sensing level.
	3	Used to check the operation of the document size sensor and the related circuit. (The document size sensor output level can be monitored with the LCD display.)
43	1	Used to set the fusing temperature in each operation mode.
44	1	Used to set enable/disable of correction operations in the image forming (process) section.
	9	Used to check the data related to the image forming section correction (process correction) result (corrected main charger grid voltage, the developing bias voltage, and the laser power voltage in each print mode). (This simulation allows to check that correction is performed normally or not.)
	14	Used to check the output level of the temperature sensor and the humidity sensor.
	16	Used to check the toner concentration control data.
46	2	Used to adjust the copy density in all the copy modes (Auto, Text, Text/Photo, and Photo mode).
	9	Used to adjust the print density for each density level (display value) in the copy mode (binary - Text mode). An optional print density can be set for each density level (display value).
	10	Used to adjust the print density for each density level (display value) in the copy mode (binary - Text/Photo mode). An optional print density can be set for each density level (display value).
	11	Used to adjust the print density for each density level (display value) in the copy mode (binary - Photo mode). An optional print density can be set for each density level (display value).
	12	Used to adjust the print density in the FAX mode (all modes).
	13	Used to adjust the print density in the FAX mode (each normal mode). (Only when FAX is installed.)
	14	Used to adjust the print density in the FAX mode (each fine mode). (Only when FAX is installed.)
	15	Used to adjust the print density in the FAX mode (each super fine mode). (Only when FAX is installed.)
	16	Used to adjust the print density in the FAX mode (each ultra fine mode). (Only when FAX is installed.)
	17	Used to set the gain in shading correction.

Code		Function (Purpose)
Main	Sub	
46	18	Used to adjust the gamma (density gradient) in the copy mode.
	19	Used to set the auto mode operation specifications in each mode (copy, scan, FAX).
	20	Used to adjust the copy density correction in the SPF copy mode for the document table copy mode. The adjustment is made so that the copy density becomes the same as that of the document table copy mode.
	21	Used to adjust the scanner exposure level in all the scanner modes.
	22	Used to adjust the scanner exposure level in the normal text mode.
	23	Used to adjust the scanner exposure level in the fine text mode.
	24	Used to adjust the scanner exposure level (in the super fine text mode).
	25	Used to adjust the scanner exposure level in the ultra fine text mode.
	27	Used to adjust the gamma (density gradient) of the network scanner mode.
	31	Used to adjust sharpness of the copy mode.
	39	Used to adjust sharpness of the FAX mode.
	45	Used to adjust the image density in the FAX mode (600dpi).
	46	Used to adjust sharpness of the scanner mode.
48	1	Used to adjust the copy magnification ratio (in the main scanning and the sub scanning directions).
	5	Used to adjust the copy magnification ratio in the sub scanning direction.
	6	HSYNC cycle adjustment
50	1	Used to adjust the copy image position and the void area (image loss) adjustment on print paper in the copy mode. (The similar adjustment can be performed with SIM 50-5 and 50-2 (Simplified method).) (Document table mode)
	2	Used to adjust the document scan position, the image print position, and the void area (image loss). (Simple adjustment) (This adjustment is the simple method of SIM 50-1.) (Document table mode)
	5	Used to adjust the print image position and the void area (image loss) on print paper. (Adjustment as the print engine) (This adjustment is reflected on all the FAX/printer/copy modes.)
	6	Used to adjust the copy image position and void area (image loss) on print paper in the copy mode. (The similar adjustment can be performed with SIM 50-7 (simple method).) (SPF mode)
	7	Used to adjust the copy image position and void area (image loss) on print paper in the copy mode. (The similar adjustment can be performed with SIM 50-6.) (SPF mode)
	10	Used to adjust the print image off-center position. (Adjusted separately for each paper feed section.)
	12	Used to adjust the scan image off-center position. (Adjusted separately for each scan mode.)
	27	Used to adjust the image loss of the scan image in the FAX/scan mode.
51	2	Used to adjust the contact pressure of paper on the resist roller of each section (each paper feed, duplex feed and SPF paper feed of the copier). (This adjustment is required when the print image position variations are considerably great or when paper jams occur frequently.)

Code		Function (Purpose)
Main	Sub	
53	6	Used to adjust the DSPF width detection level.
	7	Used to enter the SPF width detection adjustment value.
	8	Used to adjust the document scan start position. (Used to adjust the scanner scan position in the SPF mode front scan.)
55	1	Used to set the specifications of the engine control operations. (PCU PWB)
	2	Used to set the specifications of the scanner control operations. (Scanner control PWB)
	3	Used to set the specifications of the controller operations. (MFP control PWB)
56	1	Used to transfer the MFP controller data. (Used to repair the PWB.)
60	1	Used to check the MFP control (DRAM) operations (read/write).
61	1	Used to check the operation of the scanner (write) unit (LSU).
	2	Used to adjust the laser power (absolute value) in the copy mode.
	3	Used to adjust the laser power (absolute value) in the FAX mode.
	4	Used to adjust the laser power (absolute value) in the printer mode.
62	1	Used to format the hard disk. (Only in the model with a disk installed)
	2	Used to check the operation of the hard disk (read/write). (Only in the model with a disk installed) (Partial check)
	3	Used to check the operation of the hard disk (read/write). (Only in the model with a disk installed) (All areas check)
	6	Used to check the operations of the hard disk. (The self diag operation of the SMART function is executed.) (Only in the model with a disk installed)
	7	Used to check the operations of the hard disk. (The result of the self diag operation of the SMART function is printed out.) (Only in the model with a disk installed)
	8	Used to format the hard disk (the system area excluded). (Only in the model with a disk installed)
	10	Used to delete a job complete list (also to delete job log data) (Only in the model with a disk installed)
	11	Used to delete document filing data. (The management area (standard folder, user folder) is cleared.) (Only in the model with a disk installed)
63	1	Used to check the result of shading correction. (The shading correction data are displayed.)
	2	Used to execute shading.
	7	Used to adjust the white plate scan start position for shading. (Document table mode)
64	1	Used to check the operation of the printer section (self-print operation), (The print pattern, the paper feed mode, the print mode, the print quantity, and the density can be optionally set.)
65	1	Used to adjust the touch panel (LCD display section) detection position.
	2	Used to check the result of the touch panel (LCD display) detection position adjustment. (The coordinates are displayed.)
66	1	Used to change and check the FAX soft switch functions. (Used to change and check the functions provided for the FAX soft switches.) (Only when FAX is installed)

Code		Function (Purpose)
Main	Sub	
66	2	Used to clear the FAX soft switch function data and to set to the default. (Excluding the adjustment values.) (Only when FAX is installed)
	3	Used to check the operation of the FAX PWB memory (read/write). (This adjustment is required when the PWB is replaced with a new one.) (Only when FAX is installed)
	4	Used to check the output operation of data signals in each data output mode of FAX. (Used to check the operation of MODEM.) Send level: Max. (Only when FAX is installed)
	5	Used to check the output operation of data signals in each data output mode of FAX. (Used to check the operation of MODEM.) An output is sent at the send level set by the soft switch. (Only when FAX is installed)
	6	Used to print the confidential pass code. (Used when the confidential pass code is forgotten.) (Only when FAX is installed)
	7	Used to print the image memory data (memory send/receive). (Only when FAX is installed)
	8	Used to check the output operation of various sound signals of FAX. (Used to check the operation of the sound output IC.) Send level: Max. (Only when FAX is installed)
	9	Used to check the output operation of various sound signals of FAX. (Used to check the operation of the sound output IC.) An output is sent at the send level set by the soft switch. (Only when FAX is installed)
	10	Used to clear all data of the image memory (memory send/receive). The confidential data are also cleared at the same time. (Only when FAX is installed)
	11	Used to check the output operation of FAX G3 mode 300bps. (Used to check the operation of MODEM.) Send level: Max. (Only when FAX is installed)
	12	Used to check the output operation of FAX G3 mode 300bps. (Used to check the operation of MODEM.) An output is send at the send level set by the soft switch. (Only when FAX is installed)
	13	Used to enter (set) the number of FAX dial signal output test. (The dial number set by this simulation is outputted when the dial signal output test is made by SIM 66-14 - 16.) (Only when FAX is installed)
	14	Used to set the make time in the FAX pulse dial mode (10pps) and to test the dial signal output. (The dial number signal set by SIM 66-13 is outputted.) Used to check troubles in dialing and to check the operation. (Only when FAX is installed)
	15	Used to set the make time in the FAX pulse dial mode (20pps) and to test the dial signal output. (The dial number signal set by SIM 66-13 is outputted.) Used to check troubles in dialing and to check the operation. (Only when FAX is installed)
	16	Used to check the dial signal (DTMF) output in the FAX tone dial mode. (The dial number signal set by SIM 66-13 is outputted.) The send level can be set to an optional level. Used to check troubles in dialing and to check the operation. (Only when FAX is installed)

Code		Function (Purpose)
Main	Sub	
66	17	Used to check the dial signal (DTMF) output in the FAX tone dial mode. Send level: Max. Used to check the operation. (Only when FAX is installed)
	18	Used to check the dial signal (DTMF) output in the FAX tone dial mode. An output is sent at the send level set by the soft switch. Used to check the operation. (Only when FAX is installed)
	19	Used to back-up the HDD data into the Flash memory (optional FAX expansion memory: AR-MM9). (Only when FAX is installed)
	20	Used to read the back-up data by SIM 66-19 to the SRAM/HDD. (Only when FAX is installed)
	21	Used to print information related to FAX (various registrations, communication management, file management, system error protocol). (Only when FAX is installed)
	22	Used to adjust the handset volume. (Only when the FAX is installed.)
	23	Used to download the FAX program. (Only when FAX is installed) Not used in the market. (For development)
	24	Used to clear the FAST memory data. (Only when FAX is installed)
	25	Used to register the FAX number for Modem dial-in. (Only when FAX is installed) Not used in the market. (For development)
	26	Used to register external telephone numbers for Modem dial-in. (Only when FAX is installed) Not used in the market. (For development)
	27	Used to register the transfer number for voice warp. (Only when FAX is installed) Not used in the market. (For development)
	29	Used to clear data related to an address book (one-touch registration, program registration/ expansion, relay memory box registration, each table content).
	30	Used to check the change in the TEL/LIU status. (Only when FAX is installed)
	31	Used to check the relay operation. (Only when FAX is installed)
	32	Used to check the receive data (fixed data) from the line. (Only when FAX is installed)
	33	Used to check the signal (BUSY TONE/CNG/ CED/FNET/DTMF) detection. (Only when FAX is installed)
	34	Used to measure the communication time of test image data. (Only when FAX is installed)
	35	Modem program rewriting. (Only when FAX is installed) Not used in the market. (For development)
	36	Used to check interface between MFPC controller and MDMC. (Check of the data line or the command line) (Only when FAX is installed)
	39	Used to set the destination specifications. (Only when FAX is installed)
	42	PIC program rewriting (Only when FAX is installed)
	43	PIC adjustment value writing (Only when FAX is installed)
67	2	Used to check the operation of the parallel I/F of the printer. (This simulation is for production only, and requires a special tool for execution. Not used in the market.)
	11	Used to set YES/NO of the parallel I/F select signal of the printer.
	16	Used to check the operation of the network card.

C. Details

1

1-1

Purpose	Operation test/Check
Function (Purpose)	Used to check the operations of the scanner (read) unit and its control circuit.
Section	Optical (Image scanning)
Item	Operation

Operation/Procedure

1) Select the operation mode with 10-key.
2) Press START key.
   The scanner performs scanning at the speed corresponding to the operation mode.

1	TOP SPEED	Top speed (220mm/s)
2	HIGH SPEED	High speed (168.7mm/s)
3	MIDDLE SPEED	Middle speed (110mm/s)
4	LOW SPEED	Low speed (55mm/s)

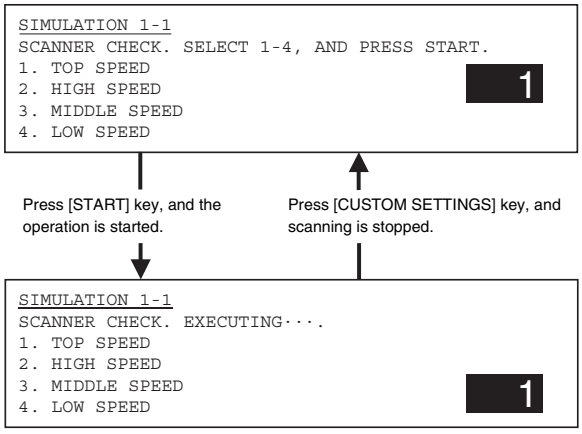

1-2

Purpose	Operation test/Check
Function (Purpose)	Used to check the operation of sensor and detector in the scanning (read) section and the related circuit.
Section	Optical (Image scanning)
Item	Operation

Operation/Procedure

The sensor and detector operation conditions are displayed.

The active sensors and detectors are highlighted.

- The scanner (read) unit is in the home position.: "MHPS" section is highlighted.
- The scanner (read) unit is not in the home position.: "MHPS" is normally displayed.

MHPS	Optical system home position

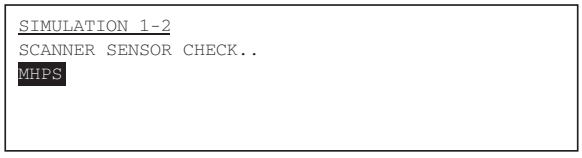

2

2-1

Purpose	Operation test/Check
Function (Purpose)	Used to check the operations of the automatic document feeder unit and the control circuit.
Section	DSPF
Item	Operation

Operation/Procedure

1) Select the operation mode with 10-key.
2) Press START key.
   The SPF repeat paper feed, transport, and paper exit at the speed corresponding to the operation mode.
   The operation can be stopped by [CUSTOM SETTINGS] key.

1	HIGH SPEED	High speed
2	LOW SPEED	Low speed

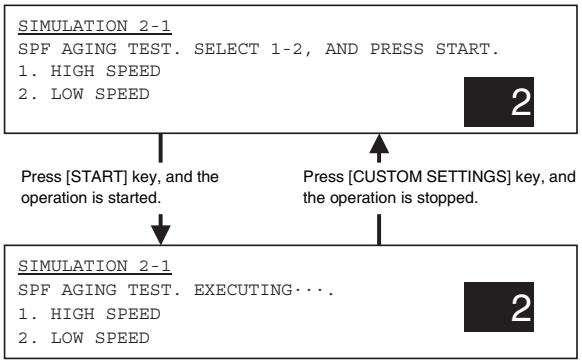

2-2

Purpose	Operation test/Check
Function (Purpose)	Used to check the operations of the sensors and detectors in the automatic document feeder unit and the related circuits.
Section	DSPF
Item	Operation

Operation/Procedure

The operating conditions of the sensors and detectors are displayed.

The active sensors and detectors are highlighted.

SPFSET	SPF sensor
SOCD	Open/close sensor
SCOV	Paper feed cover sensor
SPED	Document set sensor
SPPD	Resist front detection sensor
SPOD	Document paper exit sensor
SWDn	Document width sensor (n → 1 (inside) - 6 (outside))
SPLSn	Document length sensor (n → 1 (inside) - 2 (outside))
CISSET	CIS installation detection
STSET	Stamp unit installation sensor
SWD_LEN	SPF guide plate position (unit: 0.1mm)
SWD_AD	SPF document width detection volume output AD value

```
SIMULATION 2-2
SPF SENSOR CHECK.
SPFSET      SOCD      SCOV      SPED
SPPD        SPOD      SWD6      SWD5
SWD4        SWD3      SWD2      SWD1
SPLS2       SPLS1     CISSET    STSET
SWD_LEN: 2100         SWD_AD: 600
```

2-3

Purpose	Operation test/Check
Function (Purpose)	Used to check the operations of the loads in the automatic document feeder unit and the control circuits.
Section	DSPF
Item	Operation

Operation/Procedure

1) Select the number corresponding to the target of operation check with 10-key.
2) Press START key.
   The load selected in procedure 1 is operated.

Press [CUSTOM SETTINGS] key to stop the operation of the load.

1	MOTOR(H)	Motor high speed
2	MOTOR(L)	Motor low speed
3	SDSS	SPF gate solenoid
4	SPFS	SPF pick-up solenoid
5	SPFC	SPF paper feed clutch
6	SRRC	SPF resist roller clutch
7	STMPS	Stamp solenoid

```
SIMULATION 2-3
SPF LOAD TEST. SELECT 1-7, AND PRESS START.
1.MOTOR(H)  2.MOTOR(L)
3.SDSS      4.SPFS    5.SPFC    6.SRRC      2
7.STMPS
```

Press [START] key, and the operation is started.

Press [CUSTOM SETTINGS] key, and the operation is stopped.

```
SIMULATION 2-3
SPF LOAD TEST. EXECUTING···.
1.MOTOR(H) 2.MOTOR(L)
3.SDSS     4.SPFS    5.SPFC    6.SRRC      2
7.STMPS
```

3

3-2

Purpose	Operation test/Check
Function (Purpose)	Used to check the operation of sensor and detector in the finisher and the related circuit.
Section	Finisher
Item	Operation

Operation/Procedure

The operating conditions of the sensors and detectors are displayed.

The active sensors and detectors are highlighted.

Built-in finisher	
STHP	Stapler HP detection
POD	Tray 2 paper exit detection
SCID	Staple compiler paper entry detection
PID	Paper entry detection
T2PD	Tray 2 paper empty detection
T2DN	Tray 2 lower limit detection
T2UP	Tray 2 upper limit detection
JRHP	Jogger R HP
JFHP	Jogger (F) HP
SCID2	Staple compiler paper entry detection 2
STTHP2	Staple rotation HP detection 2
STTHP1	Staple rotation HP detection 1
STUHP	Staple shift HP detection
PSHP	Pusher HP detection
PPD	Paper hold return detection
DSW2	Staple replacement door open detection
DSW1	Compiler jam cancel door open detection
24VM	24V power supply
T1PF	Tray 1 full detection
STSP	Stapling ready detection
STLS	Cartridge inside spare staple empty detection
STNC	Cartridge empty detection
DOPD	Interface unit door open detection
MMLK	Main drive motor lock detection
SCPD	Staple compiler paper empty detection
Console finisher	
FSSS	Stapler safety switch
FJS	Joint switch
FFDSW	Front door switch
FTCS	Upper cover sensor
FFDS	Front door sensor
FSPS	Self prime sensor
FSUC	Stapler connection detection
FSS	Staple sensor
FSTHPS	Stapler HP sensor
FSHPS	Slide HP sensor
FLE	Lift lock sensor
FLLLS	Lift lower limit sensor
FULS	Lift upper limit sensor
FFE	Bookbinding clock sensor
FFES	Bookbinding paper sensor
FFRHPS	Bookbinding roller HP sensor
FFHPS	Bookbinding HP sensor
FFPS	Bookbinding position sensor
FSLS	Paper surface sensor
FBES	Tray paper sensor
FOBHPS	Paper exit belt HP sensor
FAS	Alignment tray sensor
FRJHPS	Alignment HP sensor R
FFJHPS	Alignment HP sensor F
FARHPS	Bundle roller HP sensor
FPHPS	Paddle HP sensor
FES	Entry port sensor

- The following units are added when the punch unit is installed to the console finisher:

FPE	Punch motor encoder
FPSHPS	Punch side register HP
FPUC	Punch connection detection
FPDS	Punch dust sensor
FPDSS4	Punch side register sensor 4
FPDSS3	Punch side register sensor 3
FPDSS2	Punch side register sensor 2
FPDSS1	Punch side register sensor 1
FPTS	Punch timing sensor

(Built-in finisher)

```
SIMULATION 3-3
FINISHER SENSOR CHECK.
PID          SCID         SCID2        PPD
SCPD         POD          T1PF         T2UP
T2DN         T2PD         STSP         STLS
STNC         STHP         JFHP         JRHP
PSHP         STUHP        STTHP1
STTHP2       DOPD         DSW1         DSW2
24VM         MMLK
```

(Console finisher)

```
SIMULATION 3-2
FINISHER SENSOR CHECK.
FSSS  FJS     FFDSW  FTCS    FFDS
FSPS  FSUC    FSS    FSTHPS  FSHPS   FLE     FLLLS
FULS  FFE     FFES   FFRHPS  FFHPS   FFPS    FSLS
FBES  FOBHPS  FAS    FRJHPS  FFJHPS  FARHPS  FPHPS
FES
(FPE)(FPSHPS)(FPUC)(FPDS)(FPDSS4)(FPDSS3)(FPDSS2)
(FPDSS1)(FPTS)
```

( ) : Added when the punch unit is installed.

3-3

Purpose	Operation test/Check
Function (Purpose)	Used to check the operation of the load in the finisher and the control circuit.
Section	Finisher
Item	Operation

Operation/Procedure

1) Select the number corresponding to the target of operation check with 10-key.
2) Press START key.
   The load selected in procedure 1 is operated.
   Press [CUSTOM SETTINGS] key to stop the operation of the load.

Built-in finisher		
1	T2S	Tray 2 solenoid
2	T2OM	Paper exit motor
3	SPS	Stopper solenoid
4	SCRS	Roller pressure release solenoid
5	PPS	Rear edge h folding solenoid
6	SCGS	Compiler gate solenoid
7	STTM	Staple rotation motor
8	STUM	Stapler shift motor
9	MM	Main drive motor
10	EVM	Elevator motor
11	STM	Staple motor
12	JRM	Jogger motor rear
13	JFM	Jogger motor front
14	PSM	Pusher motor
Console finisher		
1	FFC	Folding clutch
2	FPSM	Puncher side register motor
3	FPNM	Punch motor
4	FLM	Shift motor
5	FFSM	Stapler motor
6	FSM	Slide motor
7	FRJM	Alignment motor R
8	FFJM	Alignment motor F
9	FAM	Bundle exit motor
10	FPM	Paddle motor
11	FFM	Transport motor

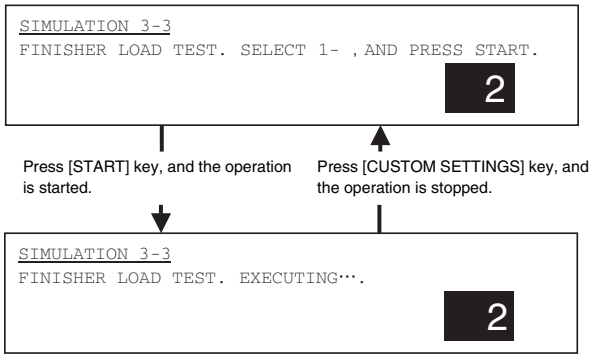

3-6

Purpose	Adjustment
Function (Purpose)	Used to adjust the stacking capacity of the finisher. (Used to adjust the alignment plate (jogger) stop position in the finisher paper width direction. The adjustment is made by changing the alignment plate home position in the paper width direction by software.)
Section	Finisher
Item	Operation

Operation/Procedure

Enter the adjustment value with 10 digit key pad and press START key. The jogger moves to LT position (Inch series) or A4 position (AB series) according to the entered value, and stops there.

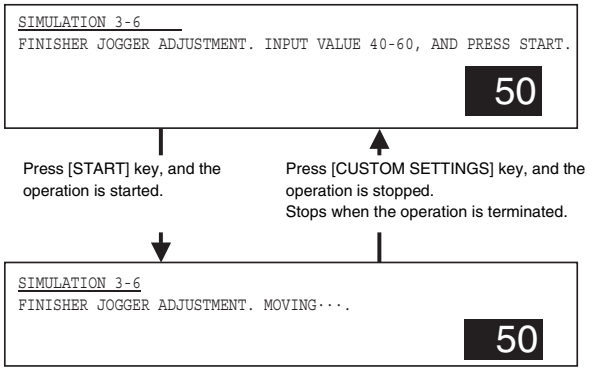

3-10

Purpose	Adjustment
Function (Purpose)	Console finisher (AR-FN7) adjustment
Section	Finisher
Item	Operation

Operation/Procedure

1) Select the number corresponding to the target of operation check with 10-key.
2) Press [START] key.
3) Enter the adjustment value with 10-key.
4) Press [START] key. (The entered value is stored.)

	Item	Set range	Initial value	1STEP
1	Saddle binding position adjustment	0 - 400	200	0.0707mm
2	Saddle folding position adjustment	0 - 400	200	0.0525mm
3	Front alignment position adjustment	0 - 20	10	0.367mm
4	Rear alignment position adjustment	0 - 20	10	0.367mm

Item		Set range	Initial value	1STEP
5	Staple rear one-position binding position adjustment	0 - 200	100	0.04374mm
6	Staple front one-position binding position adjustment	0 - 200	100	0.04374mm
7	Staple 2-position binding center adjustment	0 - 200	100	0.04374mm
8	Staple 2-position binding pitch adjustment	0 - 99	50	0.04374mm
9	Punch center adjustment (Slide direction)	47 - 53	50	1mm
10	Punch hole position adjustment (Paper feed direction)	0 - 99	50	0.105mm

```
SIMULATION 3-10
CONSOLE FINISHER SETTING. SELECT 1-10,AND PRESS START.
1.SADDLE POSITION          2.FOLDING POSITION
3.FRONT ADJUST
4.REAR ADJUST              5.STAPLE REAR
6.STAPLE FRONT             7.STAPLE BOTH
8.STAPLE PITCH             9.PUNCH CENTER
10.PUNCH HOLE                                  1
```

Press [START] key, and the operation is started.

Press [CUSTOM SETTINGS] key, and the operation is stopped.

```
SIMULATION 3-10
CONSOLE FINISHER SETTING. INPUT VALUE, AND PRESS START.
1.FOLDING POSITION
                                               200
```

3-20

Purpose	Operation test/Check
Function (Purpose)	Used to check the mail bin stacker sensor.
Section	Mail bin stacker
Item	Operation

Operation/Procedure

The operating conditions of the sensors and detectors are displayed.

The active sensors and detectors are highlighted.

MPFD1	Tray 1 paper full detection
MPFD2	Tray 2 paper full detection
MPFD3	Tray 3 paper full detection
MPFD4	Tray 4 paper full detection
MPFD5	Tray 5 paper full detection
MPFD6	Tray 6 paper full detection
MPFD7	Tray 7 paper full detection
MPFD8	Tray 8 paper full detection
MPID	Interface unit paper entry detection
MPPD1	Paper transport sensor 1
MPPD2	Paper transport sensor 2
MPPD3	Paper transport sensor 3
MPPD4	Paper transport sensor 4
MPPD5	Paper transport sensor 5
M24VM	24V power supply
MDD1	Jam cancel door
MDOPD	Interface unit door

```
SIMULATION 3-20
MAIL BOX SENSOR CHECK.
MPFD1  MPFD2  MPFD3  MPFD4  MPFD5  MPFD6  MPFD7
MPFD8  MPID   MPPD1  MPPD2  MPPD3  MPPD4  MPPD5
M24VM  MDD1   MDOPD
```

3-21

Purpose	Operation test/Check
Function (Purpose)	Used to check the operations of the mail bin stacker loads.
Section	Mail bin stacker
Item	Operation

Operation/Procedure

1) Select the number corresponding to the target of operation check with 10-key.
2) Press [START] key.
   The load selected in procedure 1 is operated.

Press [CUSTOM SETTINGS] key to stop the operation of the load.

1	MM	Main motor
2	GSOL1	Gate solenoid 1
3	GSOL2	Gate solenoid 2
4	GSOL3	Gate solenoid 3
5	GSOL4	Gate solenoid 4
6	GSOL5	Gate solenoid 5
7	GSOL6	Gate solenoid 6
8	GSOL7	Gate solenoid 7

```
SIMULATION 3-21
MAIL BOX LOAD TEST. SELECT 1-8 AND PRESS START.
1.MM
2.GSOL1                                        2
3.GSOL2
4.GSOL3
5.GSOL4
6.GSOL5
7.GSOL6
8.GSOL7
```

Press [START] key, and the operation is started.

Press [CUSTOM SETTINGS] key, and the operation is stopped.

```
SIMULATION 3-21
MAIL BOX LOAD TEST. EXECUTING···.
1.MM
2.GSOL1                                        2
3.GSOL2
4.GSOL3
5.GSOL4
6.GSOL5
7.GSOL6
8.GSOL7
```

4

4-2

Purpose	Operation test/Check
Function (Purpose)	Used to check the operations of the sensors and detectors in the paper feed section (desk paper feed/large capacity tray) and the related circuit.
Section	Paper feed
Item	Operation

Operation/Procedure

The operating conditions of the sensors and detectors are displayed.

The active sensors and detectors are highlighted.

<Desk>

DDRS	Desk door sensor
DSPD2	Desk cassette 2 remaining paper quantity sensor
DSPD1	Desk cassette 1 remaining paper quantity sensor
DCSS24	Desk cassette 2 paper rear edge sensor 4
DCSS23	Desk cassette 2 paper rear edge sensor 3
DCSS22	Desk cassette 2 paper rear edge sensor 2
DCSS21	Desk cassette 2 paper rear edge sensor 1
DLUD2	Desk cassette 2 upper limit sensor
DPED2	Desk cassette 2 paper sensor
DPFD3	Desk paper transport sensor 3
DCSS14	Desk cassette 1 paper rear edge sensor 4
DCSS13	Desk cassette 1 paper rear edge sensor 3
DCSS12	Desk cassette 1 paper rear edge sensor 2
DCSS11	Desk cassette 1 paper rear edge sensor 1
DLUD1	Desk cassette 1 upper limit sensor
DPED1	Desk cassette 1 paper sensor
DPFD2	Desk paper transport sensor 2
MCSS4	MP tray size detection 4
MCSS3	MP tray size detection 3
MCSS2	MP tray size detection 2
MCSS1	MP tray size detection 1
MCSPD	MP tray remaining quantity detection
MCLUD	MP tray upper limit detection
MCPED	MP tray paper empty detection
DPFD1	MP tray transport detection

```
SIMULATION 4-2
DESK  SENSOR CHECK.
DDRS          DPFD1         DPFD2         DPFD3
MCLUD         DLUD1         DLUD2         MCSPD
DSPD1         DSPD2         MCPED         DPED1
DPED2         MCSS1         MCSS2         MCSS3
MCSS4         DCSS11        DCSS12        DCSS13
DCSS14                      DCSS21        DCSS22
DCSS23        DCSS24
```

<LCC>

TDRS	Tandem side door sensor
TTSD	Tandem tray sensor
TLUD2	Tandem tray 2 upper limit sensor
TLUD1	Tandem tray 1 upper limit sensor
TSPD2	Tandem tray 2 remaining quantity sensor
TSPD1	Tandem tray 1 remaining quantity sensor
TPED2	Tandem tray 2 paper sensor
TPED1	Tandem tray 1 paper sensors
TPFD3	Tandem paper transport sensor 3
TPFD2	Tandem paper transport sensor 2
MCSS4	MP tray size detection 4
MCSS3	MP tray size detection 3
MCSS2	MP tray size detection 23
MCSS1	MP tray size detection 1
MCSPD	MP tray remaining quantity detection
MCLUD	MP tray upper limit detection
MCPED	MP tray paper empty detection
TPFD1	MP tray transport detection

```
SIMULATION 4-2
LCC SENSOR CHECK.
TDRS          TTSD          TPFD1         TPFD2
TPFD3         MCLUD         TLUD1         TLUD2
MCSPD         TSPD1         TSPD2         MCPED
TPED1         TPED2         MCSS1         MCSS2
MCSS3         MCSS4
```

4-3

Purpose	Operation test/Check
Function (Purpose)	Used to check the operations of the loads in the paper feed section (desk paper feed/large capacity tray) and the related circuit.
Section	Paper feed
Item	Operation

Operation/Procedure

1. Select the number corresponding to the target of operation check with 10-key.
2. Press [START] key.

   The load selected in procedure 1 is operated.

   Press [CUSTOM SETTINGS] key to stop the operation of the load.

<Desk>

1	DLUM2	Desk lift-up motor 2
2	DLUM1	Desk lift-up motor 1
3	MCLUM	Desk multi lift-up motor
4	DPFCL	Desk paper transport clutch
5	DPCL2	Desk paper feed clutch 2
6	DPCL1	Desk paper feed clutch 1
7	MCPCL	Desk multi paper feed clutch
8	DMM	Desk transport motor

<LCC>

1	TLUM2	LCC lift-up motor 2
2	TLUM1	LCC lift-up motor 1
3	MCLUM	LCC multi lift-up motor
4	TPFCL	LCC transport clutch
5	TPCL2	LCC paper feed clutch 2
6	TPCL1	LCC paper feed clutch 1
7	MCPCL	LCC multi paper feed clutch
8	TMM	LCC transport motor

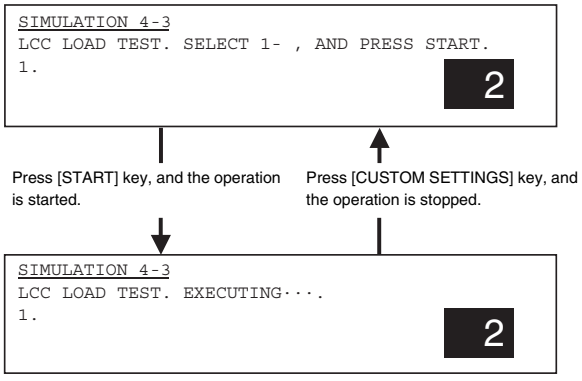

5

5-1

Purpose	Operation test/Check
Function (Purpose)	Used to check the operation of the display, LCD in the operation panel, and control circuit.
Section	Operation (Display/Operation key)
Item	Operation

Operation/Procedure

The LCD is changed as shown below. (The contrast changes every 2sec from the current level to MAX → MIN → the current level. During this period, each LED is lighted.

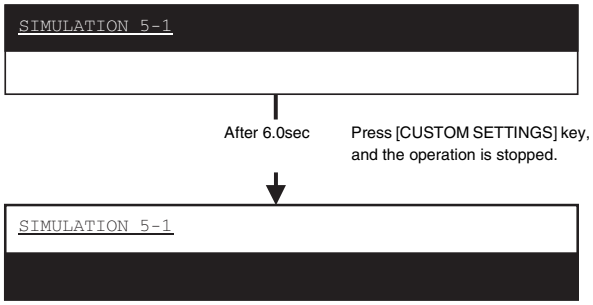

5-2

Purpose	Operation test/Check
Function (Purpose)	Used to check the operation of the heater lamp and the control circuit.
Section	Fixing (Fusing)
Item	Operation

Operation/Procedure

1) Select the number corresponding to the target of operation check with 10-key.
2) Press [START] key.
   The load selected in procedure 1 performs ON/OFF operation.
   Press [CUSTOM SETTINGS] key to stop the operation of the load.
   The ON/OFF operation of the selected heater lamp is repeated every 500ms five times.

1	HL1 (LOWER)	Heater lamp 1 (Lower)
2	HL2 (UPPER)	Heater lamp 2 (Upper)

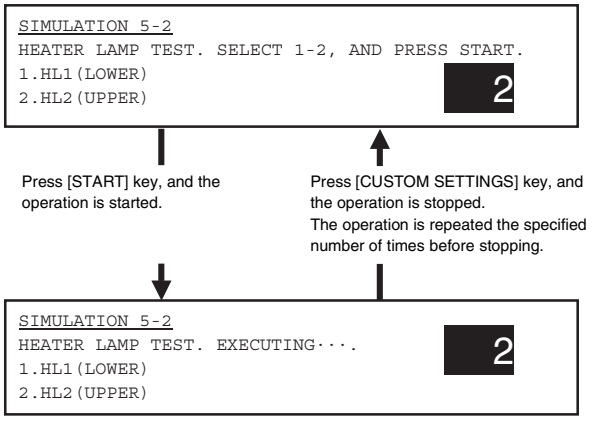

5-3

Purpose	Operation test/Check
Function (Purpose)	Used to check the operation of the scanner lamp and the control circuit.
Section	Optical (Image scanning)
Item	Operation

Operation/Procedure

1) Select the number corresponding to the target of operation check with 10-key.
2) Press [START] key.
   The load selected in procedure 1 turns ON for 10sec.
   Press [CUSTOM SETTINGS] key to stop the operation.
   The copy lamp or CIS is turned on for 10sec and turned off.

NOTE: CIS: only when the DSPF is installed.

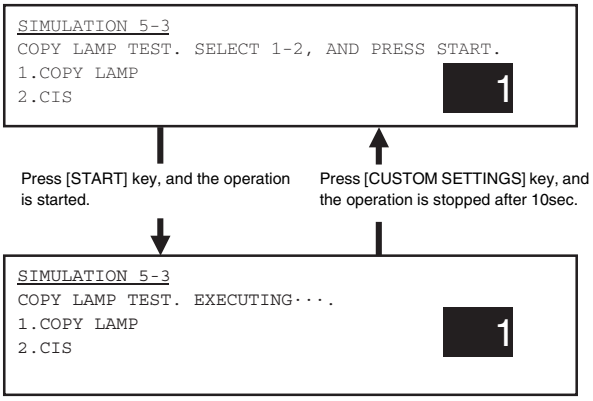

6

6-1

Purpose	Operation test/Check
Function (Purpose)	Used to check the operation of the paper transport system loads and the control circuit.
Section	Paper transport (Discharge/Switchback/Transport)
Item	Operation

Operation/Procedure

1) Select the number corresponding to the target of operation check with 10-key.
2) Press [START] key.
   The load selected in procedure 1 operates.
   Press [CUSTOM SETTINGS] key to stop the operation.

1	MSWPR	MSW power relay signal
2	HLPR	Heater power relay
3	DCPR	DC power relay
4	MM	Main motor
5	DM	Drum motor
6	POM_FW	Paper exit motor forward rotation
7	POM_RV	Paper exit motor reverse rotation
8	CPFC	Paper feed clutch
9	RRC	Resist roller clutch
10	TRC	Transport roller clutch
11	FGS_FIN	Finisher gate solenoid
12	LUM	Tray 1 lift-up motor
13	TRC_DSK	Desk clutch sync signal
14	PSPS	Separation pawl solenoid
15*1	MCM	MP drive motor control signal
16*1	MCPCL	MP tray paper feed clutch signal
17*1	MCFCL	MP tray transport clutch signal

18*1	MCLUM	MP tray lift-up motor signal
19*2	MPFS	Manual paper feed solenoid signal
20*2	MPFC	Manual paper feed clutch signal
21*2	MSS	Manual paper feed gate solenoid

*1: Displayed when OPTION of multi-purpose only.

*2: Displayed when manual feed OPTION is added.

```
SIMULATION 6-1
FEED OUTPUT CHECK. SELECT 1-22, AND PRESS START.
1.MSWPR  2.HLPR 3.DCPR 4.MM   5.DM  6.DSB_FW
7.DSB_RV 8.CPFC 9.RRC  10.TRC 11.FGS_FIN
12.LUM   13.TRC_DSK    14.PSPS
15.MCM   16.MCPCL      17.MCFCL 18.MCLUM
19.MPFS  20. MPFC      21.MSS   22.MSWS
```

2

Press [START] key, and the operation is started.

Press [CUSTOM SETTINGS] key, and the operation is stopped immediately or after repeating the operation several times.

```
SIMULATION 6-1
FEED OUTPUT CHECK. EXECUTING···.
1.MSWPR  2.HLPR 3.DCPR 4.MM   5.DM  6.DSB_FW
7.DSB_RV 8.CPFC 9.RRC  10.TRC 11.FGS_FIN
12.LUM   13.TRC_DSK    14.PSPS
15.MCM   16.MCPCL      17.MCFCL 18.MCLUM
19.MPFS  20.MPFC       21.MSS   22.MSWS
```

2

6-2

Purpose	Operation test/Check
Function (Purpose)	Used to check the operations of each fan motor and its control circuit.
Section	Other
Item	Operation

Operation/Procedure

1) Select the number corresponding to the target of operation check with 10-key.
2) Press [START] key.
   The load selected in procedure 1 operates.
   Press [CUSTOM SETTINGS] key to stop the operation.

1	Fan motor high speed
2	Fan motor low speed
3	Cooling fan motor (Controller/HDD)

```
SIMULATION 6-2
FAN MOTOR CHECK. SELECT 1-3, AND PRESS START.
1.FMHi
2.FMLo
3.CFM-ICU/HDD
```

2

Press [START] key, and the operation is started.

Press [CUSTOM SETTINGS] key, and the operation is stopped.

```
SIMULATION 6-2
FAN MOTOR CHECK..
2.FMLo
```

2

7

7-1

Purpose	Setting
Function (Purpose)	Used to set the operating conditions of aging.
Section	
Item	Operation

Operation/Procedure

1) Select the number corresponding to the operating condition of aging with 10-key.
   The combined mode of 0 - 6 mode and 10, 20, or 30 mode can be set.
   In that case, the number corresponding to one of 0 - 6 mode and the number corresponding to one of 10, 10, and 30 mode are added and the sum number is entered.
2) Press [START] key.
   The condition selected in procedure 1) is set.

The setting of this simulation is kept valid until the power is turned off.

0	NO MISS FEED DETECTION	No jam detection
1	AGING	Aging mode
2	AGING/NO MISS FEED DETECTION.	No jam detection, aging mode
3	AGING/NO MISS FEED DETECTION/NO WARM UP/ NO TEMPERATURE CONTROL.	No jam detection/ no warm-up/ no fusing temperature control, aging mode
4	NO WARM UP.	No warm-up
5	AGING/INTERVAL.	Intermittent aging mode
6	AGING/INTERVAL/NO MISS FEED DETECTION.	No jam detection intermittent aging mode
+10	NO PROCESS UNIT CHECK.	Above +10: No process unit (including the developing unit) detection
+20	NO SHADING.	Above +20: No shading
+30	NO PROCESS UNIT CHECK/ NO SHADING.	Above +30: No process unit detection /no shading

```
SIMULATION 7-1
AGING TEST SETTING. SELECT 0-36, AND PRESS START.
0.NO MISS FEED DETECTION
1.AGING
2.AGING/NO MISS FEED DETECTION.
3.AGING/NO MISS FEED DETECTION/
  NO WARM UP/NO TEMPERATURE CONTROL.
4.NO WARM UP.
5.AGING/INTERVAL.
6.AGING/INTERVAL/NO MISS FEED DETECTION.
+10:NO PROCESS UNIT CHECK.
+20:NO SHADING.
+30:NO PROCESS UNIT CHECK/NO SHADING.
```

2

Press [START] key to start registration and operation.
The operation mode is kept until the power is turned off or setting is made again.

7-6

Purpose	Setting
Function (Purpose)	Used to set the intermittent aging cycle.
Section	
Item	Operation

Operation/Procedure

1) Enter the intermittent aging cycle (unit: sec) with 10-key.
2) Press [START] key.
   The time entered in procedure 1) is set.

∗ Set range of interval time: 1 - 999 (sec)

Set the intermittent aging mode cycle of 7-1 with 10-key. (Unit: sec)

```
SIMULATION 7-6
INTERVAL AGING CYCLE SETUP. INPUT TIME AND PRESS START.
(1-999, UNIT: sec)
                                                  10
```

7-8

Purpose	Setting
Function (Purpose)	Used to set the warm-up time display YES/NO.
Item	Operation

Operation/Procedure

1) Select the number corresponding to the warm-up time display YES/NO.
2) Press [START] key, and the number selected in procedure 1) is set.

∗ The setting of this simulation is kept valid until the power is turned off.

The warm-up time is displayed in the unit of second.

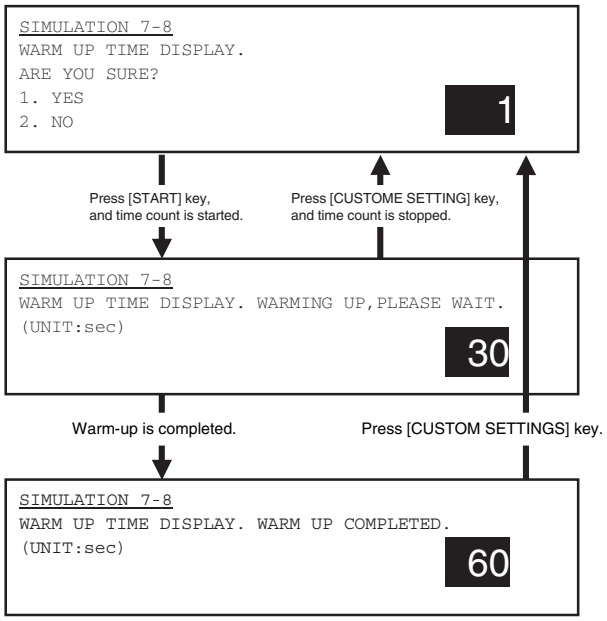

8

8-1

Purpose	Adjustment/Operation test/Check
Function (Purpose)	Used to check and adjust the operations of the developing voltage of each color and the control circuit.
Section	Image process (Photoconductor/Developing/ Transfer/Cleaning)

Operation/Procedure

1) Enter the number corresponding to the adjustment item with 10-key.
2) Press [START] key.
3) Enter the adjustment value with 10-key.
4) Press [START] key.
   (The set value is stored, and the output corresponding to the set value is outputted for 30sec.)

Press [CUSTOM SETTINGS] key to stop the operation.

(The developing bias output voltage adjustment and output check can be made in each print mode.)

Item			Set range	Default	
				AR-M351U/ M355U	AR-M451U/ M455U
1	AUTO	Auto mode	0 - 745	455	485
2	CHARACTER	Text mode		485	485
3	MIX	Text/Photo mode			
4	PHOTO	Photo mode			
5	PRINTER	Printer mode			
6	FAX	FAX mode			
7	PLUS	Reverse developing bias voltage	0 - 255	150	150

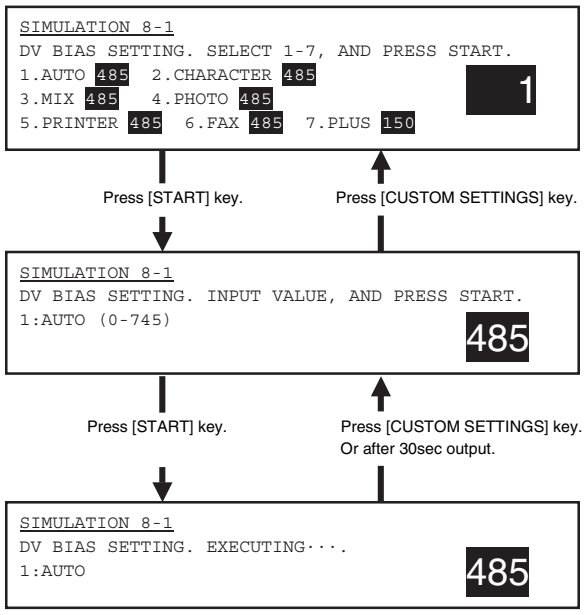

8-2

Purpose	Adjustment/Operation test/Check
Function (Purpose)	Used to check and adjust the operation of the main charger grid voltage in each printer mode and the control circuit.
Section	Image process (Photoconductor/Developing/ Transfer/Cleaning)

Operation/Procedure

1) Enter the number corresponding to the adjustment item with 10-key.
2) Press [START] key.
3) Enter the adjustment value with 10-key.
4) Press [START] key.
   (The set value is stored, and the output corresponding to the set value is outputted for 30sec.)

Press [CUSTOM SETTINGS] key to stop the operation.

(The main charger grid output voltage adjustment and output check can be made in each print mode.)

Item			Set range	Default	
				AR-M351U/ M355U	AR-M451U/ M455U
1	AUTO	Auto mode	200 - 900	615	645
2	CHARACTER	Text mode		645	645
3	MIX	Text/Photo mode			
4	PHOTO	Photo mode			
5	PRINTER	Printer mode			
6	FAX	FAX mode			

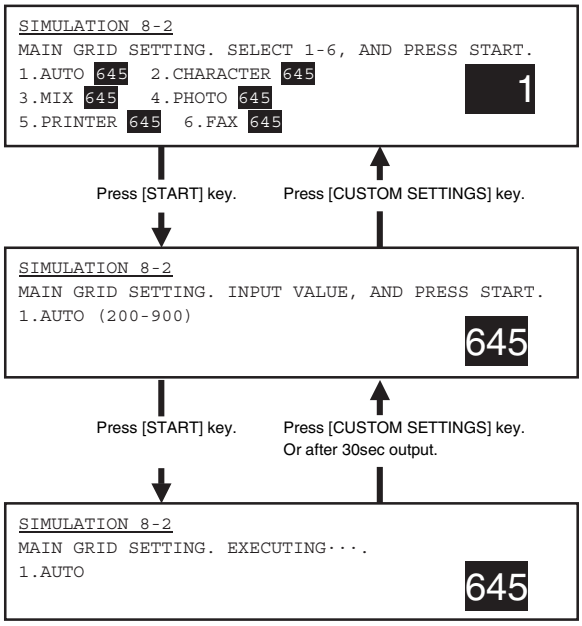

8-6

Purpose	Adjustment/Operation test/Check
Function (Purpose)	Used to check and adjust the operation of the transfer voltage and the control circuit.
Section	Image process (Photoconductor/Developing/ Transfer/Cleaning)/Transfer

Operation/Procedure

1) Enter the number corresponding to the adjustment item with 10-key.
2) Press [START] key.
3) Enter the adjustment value with 10-key.
4) Press [START] key.
   (The set value is stored, and the voltage corresponding to the set value is outputted for 30sec.)

Press [CUSTOM SETTINGS] key to stop the operation.

(The transfer output voltage adjustment and output check can be made in each print mode.)

Item			Set range	Default	
				AR-M351U/ M355U	AR-M451U/ M455U
1	FRONT	Long side print mode	0 - 620	220	267
2	BACK	Back side print mode		267	310

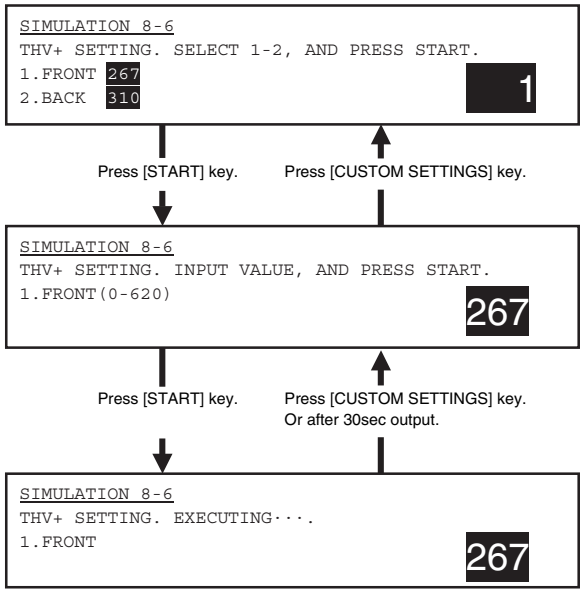

8-17

Purpose	Operation test/Check
Function (Purpose)	Used to check and adjust the operation of the transfer voltage and the related circuit. (Transfer belt cleaning mode)
Section	Image process (Photoconductor/Developing/ Transfer/Cleaning)
Item	Operation

Operation/Procedure

1) Enter the number corresponding to the adjustment item with 10-key.
2) Press [START] key.
3) Enter the adjustment value with 10-key.
4) Press [START] key.
   (The set value is stored, and the voltage corresponding to the set value is outputted for 30sec.)

Press [CUSTOM SETTINGS] key to stop the operation.

(The transfer output voltage adjustment and output check can be made in the transfer belt cleaning mode.)

Item			Set range	Default	
				AR-M351U/ M355U	AR-M451U/ M455U
1	SHF FRONT	AC component	0 - 240	120	160
2	SHV BACK	AC component	0 - 240	120	160
3	THV-	DC component	0 - 1250	780	780

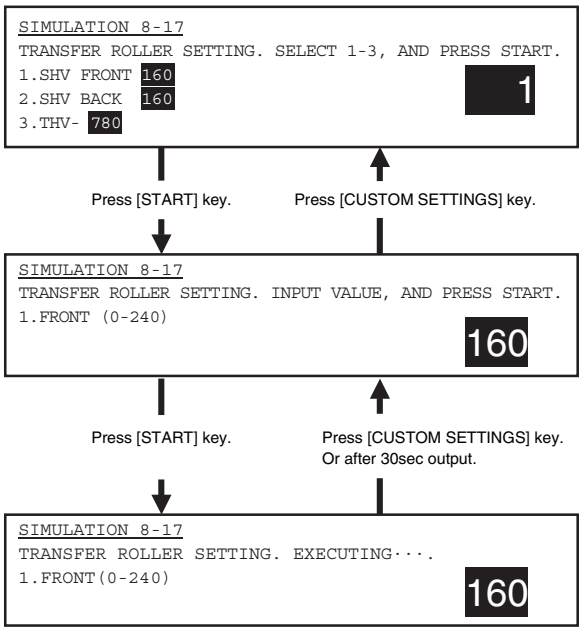

9

9-1

Purpose	Operation test/Check
Function (Purpose)	Used to check and adjust the operation of the load (clutch/solenoid) in the duplex section and the control circuit.
Section	Duplex
Item	Operation

Operation/Procedure

1) Select the number corresponding to the target of the operation check with 10-key.
2) Press [START] key.
   The load selected in procedure 1) is operated.

Press [CUSTOM SETTINGS] key to stop the operation.

1	ADMEN1	ADU motor 1 control signal
2	ADMEN2	ADU motor 2 control signal
3	DGS	ADU gate solenoid

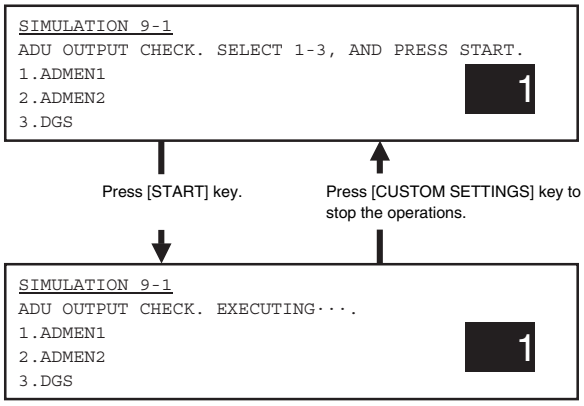

9-2

Purpose	Operation test/Check
Function (Purpose)	Used to check the operations of the sensors and detectors in the duplex section and its control circuit.
Section	Duplex
Item	Operation

Operation/Procedure

The operating conditions of the sensors and detectors are displayed.

The active sensors and detectors are highlighted.

ADUSET	ADU installation detection
DSW_D	ADU cabinet open detection
AINPD	ADU paper entry detection
APOD	ADU paper exit detection
APPD1	ADU paper detection 1
APPD2	ADU paper detection 2

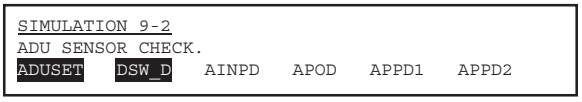

10

10-1

Purpose	Operation test/Check
Function (Purpose)	Used to check the operations of the toner motor and the related circuit.
Section	Process (Developing)
Item	Operation

Operation/Procedure

1) Select the number corresponding to the target of the operation check with 10-key.
2) Press [START] key.
   The load selected in procedure 1) is operated for 10sec.

Press [CUSTOM SETTINGS] key to stop the operation.

NOTE: Never execute this simulation with toner in the toner hopper.
If executed, excessive toner will enter the developing section. Be sure to remove the toner motor from the toner hopper before execution.

1	Toner motor rotation start
2	Cancel (The display returns to the main code entry menu.)

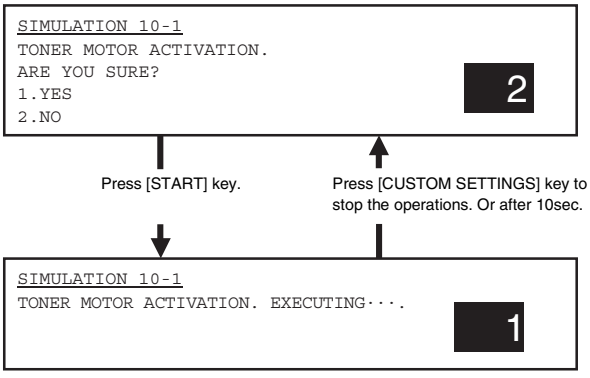

13

13-0

Purpose	Clear/Cancel (Trouble etc.)
Function (Purpose)	Used to cancel the self-diag "U1" trouble. (Only when FAX is installed.)
Section	FAX
Item	Trouble

Operation/Procedure

1) Select 1 (YES) with 10-key.
2) Press [START] key. (The trouble display is canceled.)

1	YES	After canceling U1 trouble, the machine returns to the main code entry standby mode.
2	NO	Without canceling U1 trouble, the machine returns to the main code entry standby mode.

```
SIMULATION 13
U1 TROUBLE CANCELLATION.
ARE YOU SURE?
1. YES
2. NO
```

1

14

14-0

Purpose	Clear/Cancel (Trouble etc.)
Function (Purpose)	Used to cancel excluding the self-diag U1/LCC/U2/PF troubles.
Item	Trouble Error

Operation/Procedure

1) Select 1 (YES) with 10-key.
2) Press [START] key. (The trouble display is canceled.)

1	YES	After canceling the trouble other than U1, U2, PF, and LCC, the machine returns to the main code entry standby mode.
2	NO	Without canceling the trouble, the machine returns to the main code entry standby mode.

```
SIMULATION 14
TROUBLE CANCELLATION. (OTHERS)
ARE YOU SURE?
1. YES
2. NO
```

1

15

15-0

Purpose	Clear/Cancel (Trouble etc.)
Function (Purpose)	Used to cancel the self-diag "U6-01, 02, 03, F3-12, 22" (large capacity paper feed tray, paper feed trays 1, 2) troubles.
Section	LCC
Item	Trouble

Operation/Procedure

1) Select 1 (YES) with 10-key.
2) Press [START] key. (The trouble display is canceled.)

1	YES	After canceling the LCC trouble, the machine returns to the main code entry standby mode.
2	NO	Without canceling the trouble, the machine returns to the main code entry standby mode.

```
SIMULATION 15
LCC TROUBLE CANCELLATION.
ARE YOU SURE?
1. YES
2. NO
```

1

16

16-0

Purpose	Clear/Cancel (Trouble etc.)
Function (Purpose)	Used to cancel the self-diag U2 troubles.
Section	MFP control PWB, PCU PWB, scanner control PWB
Item	Trouble

Operation/Procedure

1) Select 1 (YES) with 10-key.
2) Press [START] key. (The trouble display is canceled.)

1	YES	After canceling the U2 trouble, the machine returns to the main code entry standby mode.
2	NO	Without canceling the trouble, the machine returns to the main code entry standby mode.

```
SIMULATION 16
U2 TROUBLE CANCELLATION.
ARE YOU SURE?
1. YES
2. NO
```

1

17

17-0

Purpose	Clear/Cancel (Trouble etc.)
Function (Purpose)	Used to cancel the PF troubles (when the copy inhibit command from the host computer is received).
Section	Communication unit (TEL/LIU/MODEM etc.)
Item	Trouble Error

Operation/Procedure

1) Select 1 (YES) with 10-key.
2) Press [START] key. (The trouble display is canceled.)

1	YES	After canceling the PF trouble, the machine returns to the main code entry standby mode.
2	NO	Without canceling the trouble, the machine returns to the main code entry standby mode.

```
SIMULATION 17
PF TROUBLE CANCELLATION.
ARE YOU SURE?
1. YES
2. NO
```

1

21

21-1

Purpose	Setting
Function (Purpose)	Used to set the maintenance cycle.
Item	Specifications Counter

Operation/Procedure

1) Enter the number corresponding to the maintenance timing display.
2) Press [START] key. The condition entered in procedure 1) is set.

Maintenance timing display		Set range
0	Default (Differs depending on the model.)	0 - 999
1 - 200	Maintenance display at 1K - 200K	
999	No maintenance display	

```
SIMULATION 21-1
MAINTENANCE CYCLE SETUP. INPUT VALUE 0-999, AND PRESS
START.
 0:     DEFAULT
 1-200: MAINTENANCE CYCLE (1K-200K)
 999:   FREE
```

0

22

22-1

Purpose	Adjustment/Setup/Operation data output/Check (Display/Print)
Function (Purpose)	Used to check the print count value in each section and each operation mode. (Used to check the maintenance timing.)
Item	Counter

Operation/Procedure

Various print counter values are displayed.

TOTAL	Total counter
DRUM	Drum counter
TONER	Toner counter
DEVE	Developer counter
MAINTENANCE	Maintenance counter
TOTAL OUTPUT	Total output quantity
COPIES	Copy effective paper counter
PRINTER	Printer counter
FAX	FAX print counter
I-FAX OUTPUT	iFAX print counter
DOC FILING OUTPUT	Document filing print counter
RIIGHT SIDE OUTPUT	Right paper exit counter
OTHERS	Other print counter (List print , etc.)

```
SIMULATION 22-1
COUNTER DATA DISPLAY.
TOTAL: ********  DRUM: ********  TONER: ********
DEVE: ********   MAINTENANCE: ********
TOTAL OUTPUT: ********  COPIES: ********
PRINTER: ********       FAX OUTPUT: ********
I-FAX OUTPUT:********   DOC FILING OUTPUT:********
RIGHT SIDE:********     OTHERS: ********
```

22-2

Purpose	Adjustment/Setup/Operation data output/Check (Display/Print)
Function (Purpose)	Used to check the total numbers of misfeed and troubles. (When the number of misfeed is considerably great, it is judged as necessary for repair. The misfeed rate is obtained by dividing this count value with the total counter value.)
Item	Trouble

Operation/Procedure

The paper jam/trouble counter value is displayed.

PAPER JAM	Number of paper jams
SPF JAM	Number of SPF jams
TROUBLE	Number of troubles

```
SIMULATION 22-2
JAM/TROUBLE COUNTER DATA DISPLAY.
PAPER JAM: ********   SPF JAM: ********
TROUBLE: ********
```

22-3

Purpose	Adjustment/Setup/Operation data output/Check (Display/Print)
Function (Purpose)	Used to check misfeed positions and the misfeed count of each position. (If the misfeed count is considerably great, it may be judged as necessary to repair.)
Section	Sections other than SPF/DSPF section
Item	Trouble Misfeed

Operation/Procedure

The history of paper jams and misfeed is displayed.

The misfeed history is displayed sequentially from the latest one. The max. 100 items of misfeed history can be recorded. The data may be used to identify trouble position.

The latest 100 items of paper jam history are displayed. (Refer to the jam cause code table below.)

(Jam cause code)

Code	Description
NO_JAM_CAUSE	No jam. Also used to cancel a jam.
TRAY2	Tray 2 paper feed jam (MCPPD not-reaching: When AR-MU1 installed) (TPFD1 not-reaching: When AR-D13 installed) (DPFD1 not-reaching: When AR-D14 installed)
DPFD1_ND1	DPFD1 not-reaching jam (Desk tray 1 feed paper)
DPFD1_ND2	DPFD1 not-reaching jam (Desk tray 2 feed paper)
TPFD1_NTD	TPFD1 not-reaching jam (Tandem desk feed paper)
MCPPD_ST2	MCPPD remaining jam (Machine tray 2 feed paper: When AR-MU1 installed)
TPFD1_ST2	TPFD1 not-reaching jam (Machine tray 2 feed paper: When AR-D13 installed)
DPFD1_ST2	TPFD1 not-reaching jam (Machine tray 2 feed paper: When AR-D13 installed)
DPFD1_SD1	DPFD1 remaining jam (Desk tray 1 feed paper)
DPFD1_SD2	DPFD1 remaining jam (Desk tray 2 feed paper)
TPFD1_STD	TPFD1 remaining jam (Tandem desk feed paper)
PPD1NMF	PPD1 not-reaching jam (Manual feed tray paper)
TRAY1	Tray 1 feed paper jam (PPD1 not-reaching)
PPD1NT2	PPD1 not-reaching jam (Machine tray 2 feed paper)
PPD1ND1	PPD1 not-reaching jam (Desk tray 1 feed paper)
PPD1ND2	PPD1 not-reaching jam (Desk tray 2 feed paper)
PPD1NTD	PPD1 not-reaching jam (Tandem desk feed paper)
PPD1NAD	PPD1 not-reaching jam (ADU refeed paper)
PPD1SMF	PPD1 remaining jam (Manual feed tray feed paper)
PPD1ST1	PPD1 remaining jam (Machine tray 1 feed paper)
PPD1ST2	PPD1 remaining jam (Machine tray 2 feed paper)
PPD1SD1	PPD1 remaining jam (Desk tray 1 feed paper)

Code	Description
PPD1SD2	PPD1 remaining jam (Desk tray 2 feed paper)
PPD1STD	PPD1 remaining jam (Tandem desk feed paper)
PPD1SAD	PPD1 remaining jam (ADU refeed paper)
PPD1_PCU	PPD1 remaining jam (Timer end of fusing ready standby/high voltage rising completion standby, etc.)
PPD1PRI	PPD1 jam (Image ready is not supplied from ICU.)
POD1N	POD1 not-reaching jam
POD1S	POD1 remaining jam
POD2N	POD2 not-reaching jam
POD2SR	POD2 remaining jam (When discharging to the right side of machine.)
POD2SL	POD2 remaining jam (When discharging to the left side of machine.)
AINPDN	ADU paper entry sensor not-reaching jam
AINPDS	ADU paper entry sensor remaining jam
APODN	ADU paper exit sensor not-reaching jam
APODS	ADU paper exit sensor remaining jam
APPD1N	ADU transport sensor 1 not-reaching jam
APPD1S	ADU transport sensor 1 remaining jam
APPD2N	ADU transport sensor 2 not-reaching jam (When ADU transport)
APPD2S	ADU transport sensor 2 remaining jam (When ADU transport)
BPT	Manual feed tray paper feed jam (APPD2 not-reaching)
APPD2SM	ADU transport sensor 2 remaining jam (Manual feed tray feed paper)
DESK2	Desk tray 2 paper feed jam (DPFD3 not activated)
DPFD3SD2	DPFD3 remaining jam (Desk tray 2 feed paper)
DESK1	Desk tray 1 paper feed jam (DPFD2 not activated)
DPFD2N2	DPFD2 not-reaching jam (Desk tray 2 feed paper)
DPFD2S1	DPFD2 remaining jam (Desk tray 1 feed paper)
DPFD2S2	DPFD2 remaining jam (Desk tray 2 feed paper)
TTRAY2	Tandem tray 2 paper feed jam (TPFD3 not activated)
TPFD3S2	TPFD3 remaining jam (Tandem tray 2 feed paper)
TTRAY1	Tandem tray 1 paper feed jam (TPFD2 not activated)
TPFD2N2	TPFD2 not-reaching jam (Tandem tray 2 feed paper)
TPFD2S1	TPFD2 remaining jam (Tandem tray 1 feed paper)
TPFD2S2	TPFD2 remaining jam (Tandem tray 2 feed paper)
PPD1_DESK	DESK paper feed jam (Preliminary paper feed from the desk, no response in a certain time after paper feed instruction)
FPID_N	Built-in finisher PID not-reaching jam
FPID_S	Built-in finisher PID remaining jam
FSCID_N	Built-in finisher SCID not-reaching jam
FSCID_S	Built-in finisher SCID remaining jam
FSCID2N	Built-in finisher SCID2 not-reaching jam
FSCID2S	Built-in finisher SCID2 remaining jam
FPPD_S	Built-in finisher PPD remaining jam

Code	Description
FSCPD_N	Built-in finisher SCPD not-reaching jam
FSCPD_S	Built-in finisher SCPD remaining jam
FPOD_N	Built-in finisher POD not-reaching jam
FPOD_S	Built-in finisher POD remaining jam
FES_N	Console finisher entry port sensor (FES) not-reaching jam
FES_S	Console finisher entry port sensor (FES) remaining jam
FFPS_N	Console finisher saddle not-reaching jam (Not reaching the folding sensor (FFPS).)
FFPS_S	Console finisher saddle remaining jam (The folding sensor (FFPS) does not turn off.)
FSTPL	Console finisher staple jam (The stapler does not complete clinching.)
FPNCH	Console finisher punch jam (The puncher does not complete punching.)
FDOP	Console finisher door open jam (During/after paper passing, the front door, joint, or upper cover is opened.)
PID_N	Mail box PID not-reaching jam
PID_S	Mail box PID remaining jam
MPPD1_N	Mail box MPPD1 not-reaching jam
MPPD1_S	Mail box MPPD1 remaining jam
MPPD2_N	Mail box MPPD2 not-reaching jam
MPPD2_S	Mail box MPPD2 remaining jam
MPPD3_N	Mail box MPPD3 not-reaching jam
MPPD3_S	Mail box MPPD3 remaining jam
MPPD4_N	Mail box MPPD4 not-reaching jam
MPPD4_S	Mail box MPPD4 remaining jam
MPPD5_N	Mail box MPPD5 not-reaching jam
MPPD5_S	Mail box MPPD5 remaining jam

```
SIMULATION 22-3
PAPER JAM HISTORY.
*******,*******,*******,*******,*******,*******,*******,*******,*******,*******
*******,*******,*******,*******,*******,*******,*******,*******,*******,*******
*******,*******,*******,*******,*******,*******,*******,*******,*******,*******
*******,*******,*******,*******,*******,*******,*******,*******,*******,*******
*******,*******,*******,*******,*******,*******,*******,*******,*******,*******
...............
```

(10 lines, 80 digits = 800 characters)

22-4

Purpose	Adjustment/Setup/Operation data output/Check (Display/Print)
Function (Purpose)	Used to check the trouble (self diag) history.
Item	Trouble

Operation/Procedure

The trouble history is displayed.

The trouble history is displayed sequentially from the latest one. The max. 100 items can be stored. (The oldest one is deleted sequentially. The trouble position can be identified by the data.)

```
SIMULATION 22-4
TROUBLE HISTORY.
**-**,**-**,**-**,**-**,**-**,**-**,**-**,**-**,**-**,**-**,**-**,**-**,**-**,**-**
**-**,**-**,**-**,**-**,**-**,**-**,**-**,**-**,**-**,**-**,**-**,**-**,**-**,**-**
**-**,**-**,**-**,**-**,**-**,**-**,**-**,**-**,**-**,**-**,**-**,**-**,**-**,**-**
**-**,**-**,**-**,**-**,**-**,**-**,**-**,**-**,**-**,**-**,**-**,**-**,**-**,**-**
**-**,**-**,**-**,**-**,**-**,**-**,**-**,**-**,**-**,**-**,**-**,**-**,**-**,**-**
...............
```

(10 lines, 80 digits = 800 characters)

22-5

Purpose	Other
Function (Purpose)	Used to check the ROM version of each unit (section).
Item	Software

Operation/Procedure

The ROM version of each section can be checked. When there is any problem in the software, use this simulation to check the ROM version of each section and revise the version if necessary.

S/N	Engine section serial number
MFP	MFP controller
(LANGUAGE)	(Language version)
BOOT	MFP controller boot ROM
FAX	FAX controller
NIC	Network card
PCU	PCU controller
SCANNER	Scanner controller
FINISHER	Finisher controller
DESK	Desk/LCC controller
MAIL BIN	mail bin controller
PUNCH UNIT	Punch unit

```
SIMULATION 22-5
ROM VERSION DATA DISPLAY.
S/N:   0000000000
MFP:            1.00  (LANGUAGE:1.00)
PCU:            1.00          BOOT:         1.00
SCANNER:        1.00           FAX:         1.00
FINISHER:       1.00           NIC:         1.00
DESK:           1.00      MAIL BIN:         1.00
PUNCH UNIT:     1.00
```

22-6

Purpose	Adjustment/Setup/Operation data output/Check (Display/Print)	
Function (Purpose)	Used to output the list of the setting and adjustment data (simulations, FAX soft switch, counters).	
Item	Data	Adjust/Setting data

Operation/Procedure

When installing or servicing this machine, execute this simulation to print and save various setting and adjustment data for next servicing. (For example, memory trouble, PWB replacement, etc.)

1) Enter 1 with 10-key.
2) Press [START] key.

The various setting and adjustment data are printed out. (The print paper cannot be selected optionally.)

0	TRAY SELECT	TRAY SELECT auto only (Selection is not allowed.)
1	PRINT START	PRINT START

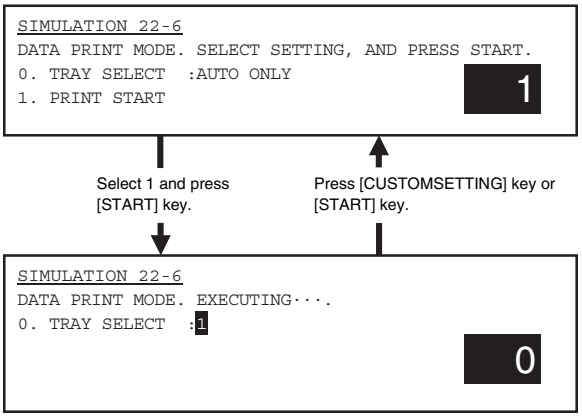

22-7

Purpose	Adjustment/Setup/Operation data output/Check (Display/Print)
Function (Purpose)	Used to display the key operator code. (This simulation is used when the customer forgets the key operator code.)
Item	Data User data

Operation/Procedure

The key operator code is displayed.

```
SIMULATION 22-7
KEY OPERATOR CODE DISPLAY.
CODE: *****
```

22-8

Purpose	Adjustment/Setup/Operation data output/Check (Display/Print)
Function (Purpose)	Used to check the number of use of the finisher, the SPF, and the scan (reading) unit.
Section	Optical (Image scanning) Finisher
Item	Counter

Operation/Procedure

The values of the finisher counter, the scanner (read), counter, and the SPF related counters are displayed.

SPF	Document feed quantity
SCAN	Number of scans
STAPLER	Number of stapling
PUNCH	Number of punching
STAMP	Number of SPF finish stamps

```
SIMULATION 22-8
ORG./STAPLE COUNTER DATA DISPLAY.
SPF: ********
SCAN: ********
STAPLER: ********      PUNCH: ********
STAMP: ********
```

22-9

Purpose	Adjustment/Setup/Operation data output/Check (Display/Print)
Function (Purpose)	Used to check the number of use (print quantity) of each paper feed section.
Section	Paper feed, ADU
Item	Counter

Operation/Procedure

The values of the paper feed related counters are displayed.

TRAY1	Use quantity of tray 1
TRAY2	Use quantity of tray 2 (Multi purpose tray)
TRAY3/LCC1	Use quantity of tray 3/LCC left tray (Common to Desk/LCC)
TRAY4/LCC2	Use quantity of tray 4/LCC right tray
BPT	Use quantity of manual feed tray
ADU	Use quantity of duplex paper feed

```
SIMULATION 22-9
PAPER FEED COUNTER DATA DISPLAY.
TRAY1:      ********   TRAY2:      ********
TRAY3/LCC1:********   TRAY4/LCC2:********
BPT:        ********   ADU:        ********
```

22-10

Purpose	Adjustment/Setup/Operation data output/Check (Display/Print)
Function (Purpose)	Used to check the system configuration (option, internal hardware).
Item	Specifications Options

Operation/Procedure

The system configuration is displayed. (The model names of the installed devices and options are displayed.)

MACHINE	AR-311S, AR-351S/AR-M355U, AR-451S/AR-M455U, AR-311FP, AR-351FP/AR-M351U, AR-451FP/ AR-M451U, AR-311N, AR-351N/M355N/M351N, AR-451N/M455N/M451N
SPF	(Model code)
FINISHER	NONE/ (Model code)
MAIL BIN	NONE/ (Model code)
PUNCH	NONE/ (Model code)
DESK/LCC	NONE/ (Model code)
ADU	NONE/ (Model code)
SYSTEM MEMORY	Memory capacity (MB)
HDD	Hard disk capacity (MB)
ICU	Board type
NIC	NONE/ (Model code)
NSCN	NONE/ (Network scanner)
PS3	NONE/ (PS3 expansion kit)
FAX	NONE/ (Model code)
FAX MEMORY	FAX expansion memory capacity (MB)
HAND SET	NONE/ (Model code)
STAMP	Finisher stamp NONE/ (Model code)
PCU TYPE	PCU PWB type (JPN: Japan/ EX100: EX Japan 100V/ EX200: EX Japan 200V)

(Model code list)

Item	Display	Content
MACHINE	AR-311S	31-sheet S model
	AR-351S/ AR-M355U	35-sheet S/U model
	AR-451S/ AR-M455U	45-sheet S/U model
	AR-311FP	31-sheet FP model (Local printer standard provision model)
	AR-351FP/ AR-M351U	35-sheet FP/U model (Local printer standard provision model)
	AR-451FP/ AR-M451U	45-sheet FP/U model (Local printer standard provision model)
	AR-311N	31-sheet N model
	AR-351N/ M355N/ M351N	35-sheet N model
	AR-451N/ M455N/ M451N	45-sheet N model
SPF	----	Document feed unit not installed
	AR-EF4	Document feed unit (SPF) installed
	AR-EF3	Duplex document feed unit (DSPF) installed
FINISHER	----	After-work unit not installed
	AR-FN6	Built-in finisher installed
	AR-FN7	Console finisher installed
MAIL BIN	----	Mail bin not installed
	AR-MS1	Mail bin installed

Item	Display	Content
Punch unit	----	Punch unit not installed
	AR-PN1A	Punch unit 2 holes
	AR-PN1B	Punch unit 3 holes
	AR-PN1C	Punch unit 4 holes
	AR-PN1D	Punch unit 4 holes wide hole
ADU	----	Duplex module not installed
	AR-DU3	Duplex module installed
	AR-DU4	Duplex module + manual feed unit installed
DESK	----	Paper feed desk not installed
	AR-MU2	Multi-purpose tray installed
	AR-D27	Paper feed desk installed
	AR-D28	Tandem desk installed
ICU	TYPE-U/S	For U/S model board
	TYPE-U/FP	For U/FP model board
	TYPE-N	For N model board
MEMORY	0MB	No expansion memory
	***MB	Expansion memory ***MB
HD	0MB	Hard disk not installed
	****MB	Hard disk installed (AR-HD3)
NIC	----	NIC not installed
	AR-NC7J	NIC installed
PS3 expansion kit	----	PS3 expansion kit not installed
	AR-PK6	PS3 expansion kit installed
FAX	----	FAX expansion kit not installed
	AR-FX12	FAX expansion kit installed
Network scanner	----	Network expansion kit not installed
	AR-NS3	Network expansion kit installed
Expansion memory	----	Expansion memory for FAX not installed
	AR-MM9	Expansion memory for FAX 8MB (AR-MM9) installed
Handset	----	handset not installed
	AR-HN5	Handset installed
Finish stamp	----	Finish stamp unit not installed
	AR-SU1	Finish stamp unit installed

```
SIMULATION 22-10
SYSTEM INFORMATION.
MACHINE:*******
SPF:*******
FINISHER:*******   MAIL BIN:*******      PUNCH:******
DESK/LCC:*******   ADU:*******
SYSTEM MEMORY:**MB            HDD:***MB  ICU:******
NIC:*******  NSCN:******      PS3:******
FAX:*******  FAX MEMORY:**MB  HAND SET:*******
STAMP:*******
PCU TYPE:*******
```

22-11

Purpose	Adjustment/Setup/Operation data output/Check (Display/Print)
Function (Purpose)	Used to check the use frequency (send/receive) of FAX. (Only when FAX is installed)
Section	FAX
Item	Data

Operation/Procedure

The values of the FAX send counter and the FAX receive counter are displayed.

FAX SEND	Number of FAX send
FAX RECEIVE	Number of FAX receive
FAX OUTPUT	Number of FAX print
SEND IMAGES	Send quantity
SEND TIME	Send time
RECEIVE TIME	Receive time

```
SIMULATION 22-11
FAX COUNTER DATA DISPLAY.
FAX SEND: ********   FAX RECEIVE : ********
FAX OUTPUT:********
SEND IMAGES: ********    SEND TIME: ********:**:**
RECEIVE TIME: ********:**:**
```

22-12

Purpose	Adjustment/Setup/Operation data output/Check (Display/Print)
Function (Purpose)	Used to check the SPF misfeed positions and the number of misfeed at each position. (When the number of misfeed is considerably great, it can be judged as necessary for repair.)
Section	DSPF
Item	Trouble

Operation/Procedure

The history of paper jam and misfeed is displayed.

The misfeed history is displayed sequentially from the latest one. The max. 20 items are recorded. (The oldest one is sequentially deleted.) This data can be used to identify the trouble position.

The latest 20 data of document jam history are displayed. (Refer to the jam code below.)

(Jam cause code)

Code	Description
NO_JAM_CAUSE	No jam. Also used to cancel a jam.
SPPD_N	SPPD not-reached jam
SPPD_S	SPPD remaining jam
STD_N	STD not-reached jam
STD_S	STD remaining jam
SPOD_N	SPOD not-reached jam
SPOD_S	SPOD remaining jam
SPSDSCN	Exposure start timer end

```
SIMULATION 22-12
SPF JAM HISTORY.
*******,*******,*******,*******,*******,*******,*******,*******,*******,*******
*******,*******,*******,*******,*******,*******,*******,*******,*******,*******
```

(10 lines, 80 digits = 800 characters)

22-13

Purpose	Adjustment/Setup/Operation data output/Check (Display/Print)
Function (Purpose)	Used to check the operating time of the process section (OPC drum, DV unit, toner bottle).
Item	Counter

Operation/Procedure

The rotating time and the print quantity of the process section (OPC drum, DV unit (developer), toner motor (toner bottle)) are displayed.

DRUM	OPC drum	Count value (counts)
		Rotating time (sec)
TONER	Toner motor	Count value (counts)
		Rotating time (sec)
DEVE	DV unit	Count value (counts)
		Rotating time (sec)

```
SIMULATION 22-13
PROCESS DATA DISPLAY.
DRUM: ********(counts)    **********(sec.)
TONER: ********(counts)   **********(sec.)
DEVE: *********(counts)   **********(sec.)
```

22-19

Purpose	Adjustment/Setup/Operation data output/Check (Display/Print)
Function (Purpose)	Used to check the values of the counters related to the scan mode and the internet FAX mode.
Section	Scanner
Item	Counter

Operation/Procedure

The values of the counters related to the scan mode and the internet FAX mode are displayed.

NETWORK SCANNER ORIGINAL COUNTER	Document scan quantity (OC, SPF total quantity)
MAIL COUNTER	Number of times of mail send
FTP COUNTER	Number of times of FTP send
INTERNET-FAX ORIGINAL COUNTER	Document scan quantity (OC, SPF, total quantity)
INTERNET-FAX SEND	Number of times of internet FAX send
INTERNET-FAX RECEIVE	Number of times of internet FAX receive
INTERNET-FAX OUTPUT	Internet FAX print quantity
SCAN TO HDD	Scan to HDD record quantity
INTERNET-FAX SEND IMAGES	IFAX send quantity counter
MAIL SEND IMAGES	MAIL send quantity counter
FTP SEND IMAGES	FTP send quantity counter

```
SIMULATION 22-19
NETWORK SCANNER AND INTERNET-FAX COUNTER DISPLAY.

 NETWORK SCANNER ORIGINAL COUNTER: *********
 MAIL COUNTER: ********
 FTP COUNTER: ********
 INTERNET-FAX ORIGINAL COUNTER: ********
 INTERNET-FAX SEND: ********
 INTERNET-FAX RECEIVE: ********
 INTERNET-FAX OUTPUT: ********
 SCAN TO HDD : ********
 INTERNET-FAX SEND IMAGES: ********
 MAIL SEND IMAGES: ********
 FTP SEND IMAGES: ********
```

23

23-2

Purpose	Adjustment/Setup/Operation data output/Check (Display/Print)
Function (Purpose)	Used to check the trouble history of paper jam and misfeed. (If the number of misfeed and troubles is considerably great, it may be judged as necessary to repair.)
Item	Trouble

Operation/Procedure

1) Select "1. PRINT START."
2) Press [START] key.
   The trouble history of paper jam and misfeed is printed.

This data can be cleared by SIM 24-1.

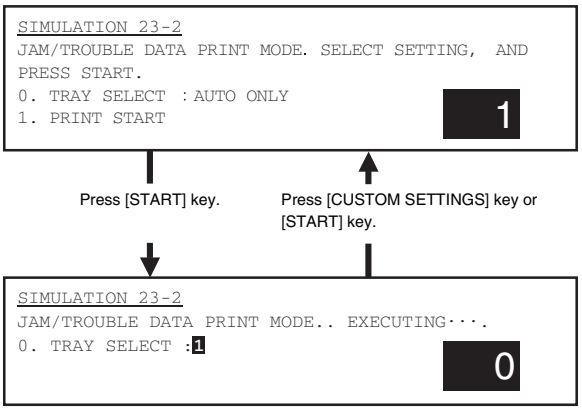

23-80

Purpose	Operation test/Check
Function (Purpose)	Used to check the operations of the sensors and detectors in the paper feed and transport section.
Section	Paper feed, paper transport
Item	Operation

Operation/Procedure

1) Select "2. PRINT PATTERN."
2) Press [START] key.
3) Select "1" (Paper transport time data) with 10-key.
4) Press [START] key.

The list of the ON time of the sensors and the detectors of the paper transport section is printed. When a paper jam or misfeed is generated, the ON time of each sensor and detector is checked to check if the operation of the sensor and the detector, paper feed, and transport are normal or not.

0	TRAY SELECT AUTO ONLY	Auto only (No selection allowed)
1	PRINT START	Print execution Print of the set data is executed.
2	PRINT PATTERN	Print pattern 1. Paper transport time data

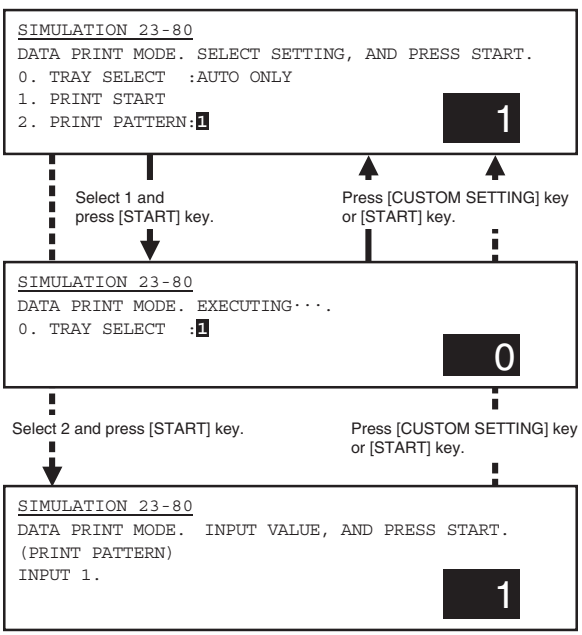

24

24-1

Purpose	Data clear
Function (Purpose)	Used to clear the misfeed counter, the misfeed history, the trouble counter, and the trouble history. (The counters are cleared after completion of maintenance.)
Item	Counter

Operation/Procedure

1) Select the counter to be cleared with 10-key.
2) Press [START] key.
   The confirmation to clear is opened.
3) Select Yes/NO of counter clear with 10-key.
   YES: Clear
   NO: Not clear
4) Press [START] key.

1	PAPER JAM	Number of paper jams
2	SPF JAM	Number of SPF jams
3	TROUBLE	Number of troubles

```
SIMULATION 24-1
JAM/ TROUBLE COUNTER DATA CLEAR. SELECT1-3, AND
PRESS START.
1. PAPER JAM
2. SPF JAM
3. TROUBLE
```

1

Press [START] key. Press [CUSTOM SETTINGS] key or [START] key.

```
SIMULATION 24-1
* COUNTER DATA CLEAR.
ARE YOU SURE?
1. YES
2. NO
```

1

* = PAPER JAM, SPF JAM, TROUBLE

24-2

Purpose	Data clear
Function (Purpose)	Used to clear the number of use (the number of prints) of each paper feed section.
Section	Paper feed
Item	Counter

Operation/Procedure

1) Select the counter to be cleared with 10-key.
2) Press [START] key.
   The confirmation to clear is opened.
3) Select Yes/NO of counter clear with 10-key.
   YES: Clear
   NO: Not clear
4) Press [START] key.

1	TRAY1	Tray 1 use quantity
2	TRAY2	Tray 2 use quantity
3	TRAY3/LCC1	Tray 3/LCC left tray use quantity
4	TRAY4/LCC2	Tray 4/LCC right tray use quantity
5	BPT	Manual feed tray use quantity
6	ADU	Duplex feed quantity

```
SIMULATION 24-2
PAPER FEED COUNTER DATA CLEAR. SELECT1-6, AND PRESS
START.
1. TRAY1          2. TRAY2
3. TRAY3/LCC1     4. TRAY4/LCC2
5. BPT            6. ADU
```

1

Press [START] key. Press [CUSTOM SETTINGS] key or [START] key.

```
SIMULATION 24-2
* COUNTER DATA CLEAR.
ARE YOU SURE?
1. YES
2. NO
```

1

* = TRAY1, TRAY2, TRAY3/LCC1, TRAY4/LCC2, BPT, ADU

24-3

Purpose	Data clear
Function (Purpose)	Used to clear the number of use of the finisher, SPF, and the scan (reading) unit.
Section	
Item	Counter

Operation/Procedure

1) Select the counter to be cleared with 10-key.
2) Press [START] key.
   The confirmation to clear is opened.
3) Select Yes/NO of counter clear with 10-key.
   YES: Clear
   NO: Not clear
4) Press [START] key.

1	SPF	SPF paper pass quantity
2	SCAN	Number of times of document scan
3	STAPLER	Number of times of stapling
4	PUNCH	Number of times of punching
5	STAMP	Number of times of SPF finish stamp

```
SIMULATION 24-3
ORG./STAPLE COUNTER DATA CLEAR. SELECT 1-5, AND PRESS
START.
1. SPF
2. SCAN
3. STAPLER
4. PUNCH
5. STAMP
```

1

Press [START] key. Press [CUSTOM SETTINGS] key or [START] key.

```
SIMULATION 24-3
* COUNTER DATA CLEAR.
ARE YOU SURE?
1. YES
2. NO
```

1

* = SPF, SCAN, STAPLER, PUNCH, STAMP

24-4

Purpose	Data clear
Function (Purpose)	Used to reset the maintenance counter.
Item	Counter

Operation/Procedure

1) Select the counter to be cleared with 10-key.
2) Press [START] key.
   The confirmation to clear is opened.
3) Select Yes/NO of counter clear with 10-key.
   YES: Clear
   NO: Not clear
4) Press [START] key.

1	MAINTENANCE	Maintenance counter

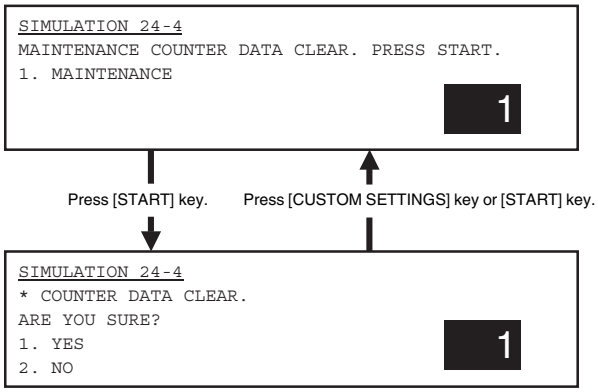

* = MAINTENANCE

24-5

Purpose	Data clear
Function (Purpose)	Used to reset the developer counter. (The developer counter of the DV unit which is installed is reset.)
Section	Image process (Photoconductor/Developing/Transfer/Cleaning)
Item	Counter Developer

Operation/Procedure

1) Select the counter to be cleared with 10-key.
2) Press [START] key.
   The confirmation to clear is opened.
3) Select Yes/NO of counter clear with 10-key.
   YES: Clear
   NO: Not clear
4) Press [START] key.

1	DV CARTRIDGE	Developer cartridge

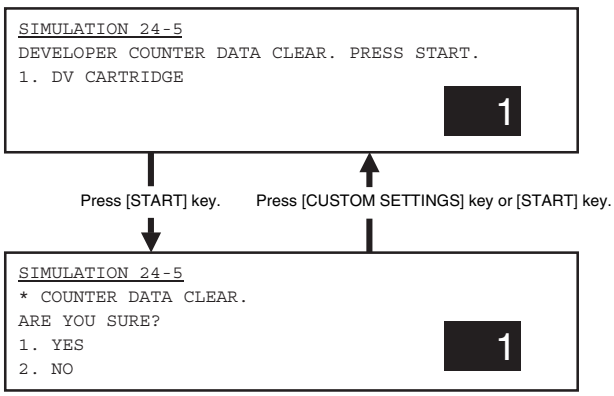

* = DV CARTRIDGE

24-6

Purpose	Data clear
Function (Purpose)	Used to reset the copy counter.
Item	Counter Copy

Operation/Procedure

1) Select the counter to be cleared with 10-key.
2) Press [START] key.
   The confirmation to clear is opened.
3) Select Yes/NO of counter clear with 10-key.
   YES: Clear
   NO: Not clear
4) Press [START] key.

1	COPY	Copy effective paper counter

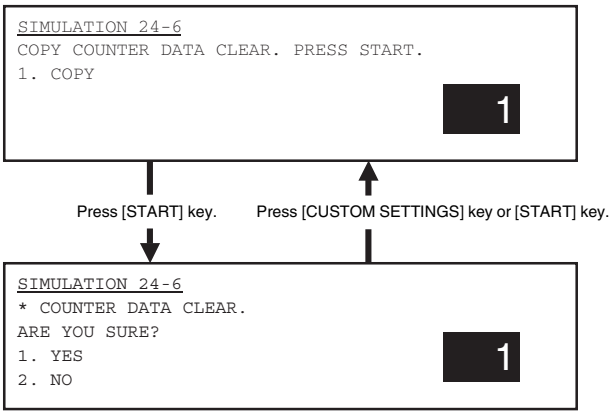

* = COPY

24-7

Purpose	Data clear
Function (Purpose)	Used to clear the OPC drum counter. (Perform this simulation when the OPC drum is replaced.)
Section	Image process (Photoconductor/Developing/Transfer/Cleaning)
Item	Counter Photo conductor

Operation/Procedure

1) Select the counter to be cleared with 10-key.
2) Press [START] key.
   The confirmation to clear is opened.
3) Select Yes/NO of counter clear with 10-key.
   YES: Clear
   NO: Not clear
4) Press [START] key.

After replacing the OPC drum, be sure to clear the OPC drum counter.

1	DRUM	OPC drum counter

```
SIMULATION 24-7
DRUM COUNTER DATA CLEAR. SELECT1, AND PRESS
START.
1. DRUM
```

1

Press [START] key. Press [CUSTOM SETTINGS] key or [START] key.

```
SIMULATION 24-7
* COUNTER DATA CLEAR.
ARE YOU SURE?
1. YES
2. NO
```

1

* = DRUM

24-9

Purpose	Data clear
Function (Purpose)	Used clear the printer mode print counter and the self print mode print counter.
Section	Printer
Item	Counter

Operation/Procedure

1) Select the counter to be cleared with 10-key.
2) Press [START] key.
   The confirmation to clear is opened.
3) Select Yes/NO of counter clear with 10-key.
   YES: Clear
   NO: Not clear
4) Press [START] key.

After replacing the OPC drum, be sure to clear the OPC drum counter.

1	PRINTER	Printer counter (Print mode)
2	OTHERS	Other effective paper counter (Self print mode)

```
SIMULATION 24-9
PRINTER/OTHERS COUNTER DATA CLEAR. SELECT1-2, AND
PRESS START.
1. PRINTER
2. OTHERS
```

1

Press [START] key. Press [CUSTOM SETTINGS] key or [START] key.

```
SIMULATION 24-9
* COUNTER DATA CLEAR.
ARE YOU SURE?
1. YES
2. NO
```

1

* = PRINTER, OTHERS

24-10

Purpose	Data clear
Function (Purpose)	Used to clear the FAX counter. (Only when FAX is installed)
Section	FAX
Item	Counter

Operation/Procedure

1) Select the counter to be cleared with 10-key.
2) Press [START] key.
   The confirmation to clear is opened.
3) Select Yes/NO of counter clear with 10-key.
   YES: Clear
   NO: Not clear
4) Press [START] key.

1	FAX SEND	Number of times of FAX send
2	FAX RECEIVE	Number of times of FAX receive
3	FAX OUTPUT	FAX print quantity
4	SEND IMAGES	Send quantity
5	SEND TIME	Send time
6	RECEIVE TIME	Receive time

```
SIMULATION 24-10
FAX COUNTER DATA CLEAR. SELECT1-6, AND PRESS START.
1. FAX SEND
2. FAX RECEIVED
3. FAX OUTPUT
4. SEND IMAGES
5. SEND TIME
6. RECEIVE TIME
```

1

Press [START] key. Press [CUSTOM SETTINGS] key or [START] key.

```
SIMULATION 24-10
* COUNTER DATA CLEAR.
ARE YOU SURE?
1. YES
2. NO
```

1

* = FAX SEND, FAX RECEIVED, FAX OUTPUT, SEND IMAGES, SEND TIME, RECEIVE TIME

24-11

Purpose	Data clear
Function (Purpose)	Used to reset the OPC drum rotation time, and the DV unit rotation time counter. The developer counter in the DV unit installed is reset.
Section	Image process (Photoconductor/Developing/Transfer/Cleaning)
Item	Counter Developer

Operation/Procedure

1) Select the counter to be cleared with 10-key.
2) Press [START] key.
   The confirmation to clear is opened.
3) Select Yes/NO of counter clear with 10-key.
   YES: Clear
   NO: Not clear
4) Press [START] key.

1	DRUM ROTATION	OPC drum rotation time
2	DV ROTATION	DV unit rotation time

```
SIMULATION 24-11
TIMER DATA CLEAR. SELECT1-2, AND PRESS START.
1. DRUM ROTATION
2. DV ROTATION
```

1

Press [START] key. Press [CUSTOM SETTINGS] key or [START] key.

```
SIMULATION 24-11
* TIMER DATA CLEAR.
ARE YOU SURE?
1. YES
2. NO
```

1

* = DRUM ROTATION, DV ROTATION

24-15

Purpose	Data clear
Function (Purpose)	Used to clear the counters related to the scan mode and the internet FAX mode.
Item	Counter

Operation/Procedure

1) Select the counter to be cleared with 10-key.
2) Press [START] key.
   The confirmation to clear is opened.
3) Select Yes/NO of counter clear with 10-key.
   YES: Clear
   NO: Not clear
4) Press [START] key.

1	NETWORK SCANNER ORIGINAL COUNTER	Document scan quantity counter in the network scanner mode
2	MAIL COUNTER	Number of times of mail send
3	FTP COUNTER	Number of times of FTP send
4	INTERNET-FAX ORIGINAL COUNTER	Internet FAX document scan quantity (Total quantity of OC and SPF)
5	INTERNET-FAX SEND	Number of times of internet FAX send
6	INTERNET-FAX RECEIVE	Number of times of internet FAX receive
7	INTERNET-FAX OUTPUT	Internet FAX print quantity
8	SCAN TO HDD	SCAN TO HDD record quantity
9	INTERNET-FAX SEND IMAGES	IFAX send quantity counter
10	MAIL SEND IMAGES	MAIL send quantity counter
11	FTP SEND IMAGES	FTP send quantity counter
12	DOC FILING OUTPUT	Document filing print counter.

```
SIMULATION 24-15
NETWORK SCANNER AND INTERNET-FAX COUNTER CLEAR.
SELECT1-3, AND PRESS START.
1. NETWORK SCANNER ORIGINAL COUNTER
2. MAIL COUNTER
3. FTP COUNTER
4. INTERNET-FAX ORIGINAL COUNTER: ********
5. INTERNET-FAX SEND: ********
6. INTERNET-FAX RECEIVE: ********
7. INTERNET-FAX OUTPUT: ********
8. SCAN TO HDD: ********
9. INTERNET-FAX SEND IMAGES: ********
10. MAIL SEND IMAGES: ********
11. FTP SEND IMAGES: ********
12. DOC FILING OUTPUT: ********
```

1

Press [START] key. Press [CUSTOM SETTINGS] key or [START] key.

```
SIMULATION 24-15
* COUNTER DATA CLEAR.
ARE YOU SURE?
1. YES
2. NO
```

1

* = NETWORK SCANNER ORIGINAL, MAIL, FTP, INTERNET-FAX ORIGINAL COUNTER, INTERNET-FAX SEND, INTERNET-FAX RECEIVE, INTERNET-FAX OUTPUT, SCAN TO HDD, INTERNET-FAX SEND IMAGES, MAIL SEND IMAGES, FTP SEND IMAGES, DOC FILING OUTPUT

25

25-1

Purpose	Operation test/Check
Function (Purpose)	Used to check the operations of the developing section (toner concentration, humidity and toner concentration sensor, humidity sensor, temperature sensor output can be monitored.)
Section	Process (Developing section)
Item	Operation

Operation/Procedure

Press [START] key.

The developing motor and the OPC drum motor rotate, and the toner concentration detection level and the humidity sensor detection level and the temperature sensor detection level are displayed.

```
SIMULATION 25-1
TONER SENSOR OUTPUT MONITOR. PRESS START.
HUMIDITY AREA :    70.0 - 72.5
TEMPERATURE AREA:  70.0 - 72.5
DEVE REFERENCE :   128
```

Press [START] key. Press [CUSTOM SETTINGS] key, and the operation is stopped immediately or after 2 min.

```
SIMULATION 25-1
DV MONITOR. EXECUTING···.
HUMIDITY AREA :    70.0 - 72.5
TEMPERATURE AREA:  70.0 - 72.5
DEVE REFERENCE :   128
```

25-2

Purpose	Setting
Function (Purpose)	Used to make the initial setting of toner concentration when replacing developer.
Section	Image process (Photoconductor/Developing/ Transfer/Cleaning)

Operation/Procedure

1) Press [START] key.

   The developing motor rotates for 2 min and the toner concentrations sensor makes sampling of toner concentration 16 times, and the detection level is displayed.

   After the developing motor stops, the average value of toner concentration sampling is set as the reference toner concentration level.

NOTE: When the above operation is interrupted on the way, the reference toner concentration level is not set. Also when error code of EE-EL or EE-EU is displayed, the reference toner concentration level is not set normally.

(Default: 118)

2) The humidity near the developing tank at the developing adjustment is registered.

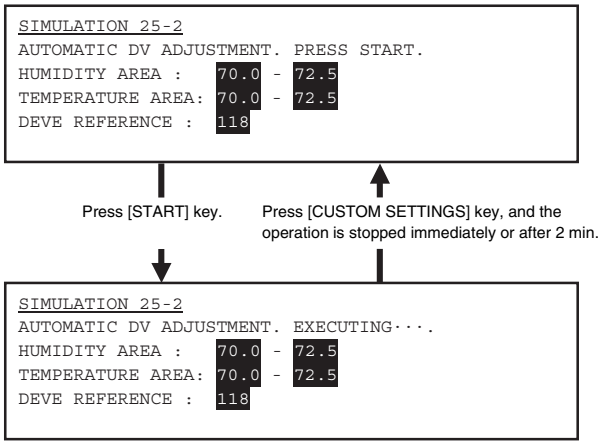

26

26-3

Purpose	Setting
Function (Purpose)	Used to set the specifications of the auditor. Setting must be made according to the auditor use conditions.
Section	Auditor
Item	Specifications

Operation/Procedure

1) Select the number corresponding to the auditor mode with 10-key.
2) Press [START] key.

1	P10	Built-in auditor mode
2	VENDOR	Coin vendor mode
3	OTHERS	Other
4	VENDOR-EX	Coin vendor mode (without temporarily charge)
5	VENDOR-EX+	Coin vendor mode (without temporarily charge) + Document filing function enable

(Default: 1)

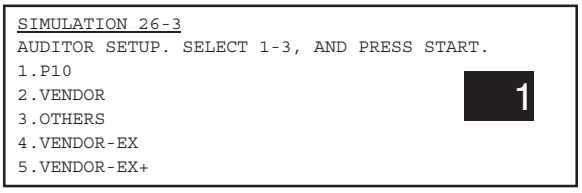

26-5

Purpose	Setting
Function (Purpose)	Used to set the count mode of the total counter and the maintenance counter.
Item	Specifications Counter

Operation/Procedure

1) Select the number corresponding to the counter to be set with 10-key.
2) Press [START] key.
3) Select the count mode with 10-key.
4) Press [START] key.

Set the count-up (1 or 2) for A3/WLT paper.

(Select the target counter.)

1	TOTAL COUNTER	Total counter
2	MAINTENANCE (DRUM) COUNTER	Maintenance counter/ OPC drum counter
3	DV COUNTER	Developer counter

(Count-up)

1	1 COUNT UP	1 count-up	
2	2 COUNT UP	2 count-up	Default

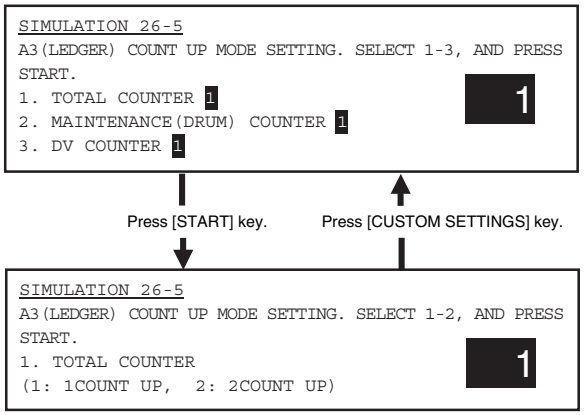

26-6

Purpose	Setting
Function (Purpose)	Used to set the specifications (paper, document detection, etc.) of the destination.
Item	Specifications Destination

Operation/Procedure

1) Select the number corresponding to the destination with 10-key.
2) Press [START] key.

After completion of setting, the machine is automatically reset.

1	USA	United States of America
2	CANADA	Canada
3	INCH	Inch series EX
4	JAPAN	Japan
5	AB_B	AB series B5
6	EUROPE	Europe
7	UK	UK
8	AUSTRALIA	Australia
9	AB_A	AB series A5
10	CHINA	China

Since this simulation cannot change the Fax destination, use SIM 66-2 to change the FAX destination.

```
SIMULATION 26-6
DESTINATION SETUP. SELECT 1-10, AND PRESS START.
1.USA 2.CANADA 3.INCH
4.JAPAN 5.AB_B
6.EUROPE 7.UK 8.AUSTRALIA
9.AB_A   10.CHINA
```

1

26-10

Purpose	Setting
Function (Purpose)	Used to set the network scanner trial mode.
Item	Operation

Operation/Procedure

1) Select START/END of the network scanner trial mode with 10-key.
2) Press [START] key.

Max. 500 menus can be scanned.

0	END	Trial mode cancel	Default
1	START	Trial mode start	

```
SIMULATION 26-10
NETWORK SCANNER TRIAL SETTING. SELECT 0-1, AND PRESS
START.
0.END
1.START
```

1

26-18

Purpose	Setting
Function (Purpose)	Used to set YES/NO of toner save operation. (This function is valid only in Japan and UK versions. (Depends on the destination setting of SIM26-6.) For the other destinations, the same setting can be made by the user program P22.)
Item	Specifications Operation mode

Operation/Procedure

1) Select YES/NO of the toner save mode with 10-key.
2) Press [START] key.

0	YES	Toner save mode is set.	
1	NO	Toner save mode is not set.	Default

```
SIMULATION 26-18
TONER SAVE MODE SETTING. SELECT 0-1, AND PRESS START.
0. YES
1. NO
```

1

26-30

Purpose	Setting
Function (Purpose)	Used to set the operation mode conforming to the CE mark (Europe safety standards). (Conforming to soft start when driving the fusing heater lamp.)
Item	Specifications Operation mode (Common)

Operation/Procedure

1) Select the number corresponding to the operation mode with 10-key.
2) Press [START] key.

0	NO	CE mark control NO (Normal operation)
1	YES	CE mark control YES (Heater lamp soft start operation)

(Default: 1 for Europe, 0 for the others)

```
SIMULATION 26-30
CE MARK CONTROL SETTING. SELECT 0-1, AND PRESS START.
0. NO
1. YES
```

1

26-35

Purpose	Setting
Function (Purpose)	Used to set whether the same continuous troubles are displayed as one trouble or the series of troubles with SIM 22-4 when the same troubles occur continuously.
Section	
Item	Specifications

Operation/Procedure

1) Select the number corresponding to the operation mode with 10-key.
2) Press [START] key.

0	ONCE	When two or more troubles of a same kind occur continuously, the troubles are displayed as one trouble in the trouble history of SIM22-4.
1	ANY	When two or more troubles of a same kind occur continuously, the troubles are displayed straightly as two or more troubles in the trouble history of SIM22-4.

(Default: 0)

```
SIMULATION 26-35
TROUBLE MEMORY MODE SETTING. SELECT 0-1, AND PRESS
START.
0. ONCE
1. ANY
```

1

26-38

Purpose	Setting
Function (Purpose)	Used to set CONTINUE/STOP of printing when maintenance timing is over and the count value reaches 110% of replacement timing (life).
Section	Other
Item	Specifications

Operation/Procedure

1) Select the number corresponding to the operation mode with 10-key.
2) Press [START] key.

0	PRINT CONTINUE	Print continue
1	PRINT STOP	Print stop

(Default: 0)

```
SIMULATION 26-38
LIFE OVER SETTING. SELECT 0-1, AND PRESS START.
0. PRINT CONTINUE
1. PRINT STOP
```

1

26-41

Purpose	Setting
Function (Purpose)	Used to set the automatic magnification ratio selection (AMS) in the pamphlet mode.
Section	
Item	Specifications Operation mode (Common)

Operation/Procedure

1) Enter the number corresponding to whether AMS operation is automatically performed or nor in the center binding mode with the 10-key.
2) Press [START] key.

0	NO	AMS/APS selection allowed
1	YES	AMS is forcibly operated.

(Default: 1 for Europe and UK, 0 for the others)

```
SIMULATION 26-41
PAMPHLET MODE AMS SETTING. SELECT 0-1, AND PRESS
START.
0. NO                                    1
1. YES
```

26-50

Purpose	Setting
Function (Purpose)	Black-White reverse YES/NO setting
Item	Specifications Operation

Operation/Procedure

1) Select ENABLE/DISABLE of the B/W reverse mode with 10-key.
2) Press [START] key.

0	DISABLE	B/W reverse mode DISABLE	
1	ENABLE	B/W reverse mode ENABLE	Default

```
SIMULATION 26-50
B/W REVERSE MODE SETTING. SELECT 0-1, AND PRESS
START.
0. DISABLE                               1
1. ENABLE
```

26-52

Purpose	Setting
Function (Purpose)	Used to set whether non-print paper (insertion paper, cover paper) (blank image print paper) is counted up or not.
Section	Paper transport (Discharge/Switchback/Transport)
Item	Specifications Operation mode

Operation/Procedure

1) Select YES/NO of the non-print paper count-up with 10-key.
2) Press [START] key.

Non-print paper means an insert paper (without copying) in the OHP insertion mode, a cover (without copying) in the cover insertion mode, back surface, and white paper in the duplex exit mode (CA, etc.).

0	NO (NO COUNT UP)	No count up
1	YES (COUNT UP)	Count up

(Default: 0 for Japan and Australia, 1 for the other)

The target counters are as follows:

- Copies counter
- Printer counter
- Department management counter
- Total counter
- Effective paper counter

```
SIMULATION 26-52
BLANK PAPER COUNT UP SETTING. SELECT 0-1, AND PRESS
START.
0. NO  (NO COUNT UP)                     1
1. YES (COUNT UP)
```

26-68

Purpose	Setting
Function (Purpose)	Used to set ENABLE/DISABLE of the CA key cancel function of print stop.
Section	
Item	Specifications Operation

Operation/Procedure

1) Select ENABLE/DISABLE of the CA key cancel function of print stop with 10-key.
2) Press [START] key.

0	DISABLE	Disable
1	ENABLE (PRINT STOP)	Enable

(Default: 1)

```
SIMULATION 26-68
CA KEY CANCEL MODE SETTING. SELECT 0-1, AND PRESS
START.
0. DISABLE                               0
1. ENABLE (PRINT STOP)
```

27

27-1

Purpose	Setting
Function (Purpose)	Used to set the specifications for operations in case of communication trouble between the host computer and MODEM (machine side). (When communication trouble occurs between the host computer MODEM and the machine, the self diag display (U7-00) is printed and setting for inhibition of print or not is made.)
Section	Communication unit (TEL/LIU/MODEM etc.)
Item	Specifications Operation mode

Operation/Procedure

1) Select the number corresponding to the operation mode with 10-key.
2) Press [START] key.

0	YES	Though a communication trouble occurs between the host computer and the MODEM (machine side), there is no effect on the machine operations.
1	NO	When a communication trouble occurs between the host computer and the MODEM (machine side), the self diag display (U7-00) is displayed and printing is inhibited.

(Default: 0)

```
SIMULATION 27-1
DISABLING OF U7-00 TROUBLE. SELECT 0-1, AND PRESS START.
0. YES                                   1
1. NO
```

27-5

Purpose	Setting
Function (Purpose)	Used to enter the machine tag No. (This function allows to check the tag No. of the machine with the host computer.)
Section	Communication unit (TEL/LIU/MODEM etc.)
Item	Specifications Operation mode

Operation/Procedure

1) Enter the tag number with 10-key.
2) Press [START] key.

```
SIMULATION 27-5
TAG # SETTING. INPUT VALUE, AND PRESS START.
PRESENT:  00010000
NEW:      00009999
```

30

30-1

Purpose	Operation test/Check
Function (Purpose)	Used to check the operation of sensors and detectors in other than the paper feed section and the operations of the related circuits.
Item	Operation

Operation/Procedure

The operating conditions of sensors and detectors are displayed.
The active sensors and detectors are highlighted.

PPD1	Resist roller front paper detection
POD1	After-fusing transport detection 1
POD2	After-fusing transport detection 2
POD3	Paper full detection
DSWL	Cabinet open detection
DSWF	Front door

```
SIMULATION 30-1
SENSOR CHECK..
PPD1   POD1   POD2   POD3   DSWL
DSWF
```

30-2

Purpose	Operation test/Check
Function (Purpose)	Used to check the operation of sensors and detectors in the paper feed section and the related circuits.
Section	Paper feed
Item	Operation

Operation/Procedure

The operating conditions of sensors and detectors are displayed.
The active sensors and detectors are highlighted.

CSS1	Tray 1 insertion detection
PED	Tray 1 paper empty detection
LUD	Tray 1 upper limit detection
MCSET	MP unit detection
MCDRS	MP unit side door open detection
MCPPD	MP tray transport detection
MCLUD	MP tray upper limit detection
MCPED	MP tray paper empty detection
MCSPD	MP tray remaining quantity detection
MCSS1	MP tray size detection 1
MCSS2	MP tray size detection 2
MCSS3	MP tray size detection 3
MCSS4	MP tray size detection 4
MP Tray size	(The detection size of MP tray is displayed.)
MPFSET	Manual feed tray detection
MPED	Manual feed tray paper empty detection
MPLD	Manual feed length detection
MPLS1	Manual feed pull-out sensor 1
MPLS2	Manual feed pull-out sensor 2
Bypass Tray size	(The detection size of manual feed tray is displayed.)

```
SIMULATION 30-2
TRAY SENSOR CHECK..
CSS    PED   LUD
MCSET  MCDRS MCPPD MCLUD MCPED MCSPD MCSS1 MCSS2
MCSS3  MCSS4      (MP Tray size: A4 )
MPFSET MPED  MPLD  MPLS1 MPLS2
                  (Bypass Tray size: A3 )
```

40

40-1

Purpose	Operation test/Check
Function (Purpose)	Used to check the operation of the manual feed tray paper size detector and the related circuit. (The operation of the manual feed tray paper size detector can be monitored with the LCD display.)
Section	Paper feed
Item	Operation

Operation/Procedure

The operating conditions of sensors and detectors are displayed.
The active sensors and detectors are highlighted.
The paper width size detection level is displayed.

MPLD	Manual tray length detection
MPLS1	Manual tray pull-out detection 1
MPLS2	Manual tray pull-out detection 2
BYPASS_WIDTH	Manual feed guide plate position
BYPASS_AD	Manual feed width detection volume output AD value
Bypass Tray width size	(Manual tray detection size is displayed.) A4/A3, 11 x, B5/B4, 8.5 x , A4R, B5R, A5R, 5.5x, 7.25x, EXTRA

```
SIMULATION 40-1
BYPASS TRAY SENSOR CHECK..

MPLD      MPLS1      MPLS2
BYPASS_WIDTH: 2100        BYPASS_AD: 600
(Bypass Tray width size: A4/A3)
```

40-2

Purpose	Adjustment
Function (Purpose)	Used to adjust the manual paper feed tray paper width detector detection level.
Section	Paper feed
Item	Operation

Operation/Procedure

1) Open the manual paper feed guide to the max. width.
2) Select MAX POSITION with 10-key.
3) Press [START] key.
   The max. width detection level is recognized.
4) Press [CUSTOM SETTINGS] key.
5) Set the manual paper feed guide to A4R size width.
6) Select POSITION with 10-key.
7) Press [START] key.
   The A4R width detection level is recognized.
8) Press [CUSTOM SETTINGS] key.
9) Set the manual paper feed guide to A5/A5R size width.
10) Select POSITION2 with 10-key.
11) Press [START] key.
    The A5R width detection level is recognized.
12) Press [CUSTOM SETTINGS] key.
13) Open the manual paper feed guide to the min. width.
14) Select MIN POSITION with 10-key.
15) Press [START] key.
    The min. width detection level is recognized.

If the above procedures are not completed normally, "ERROR" is displayed. If completed normally, "COMPLETE" is displayed.

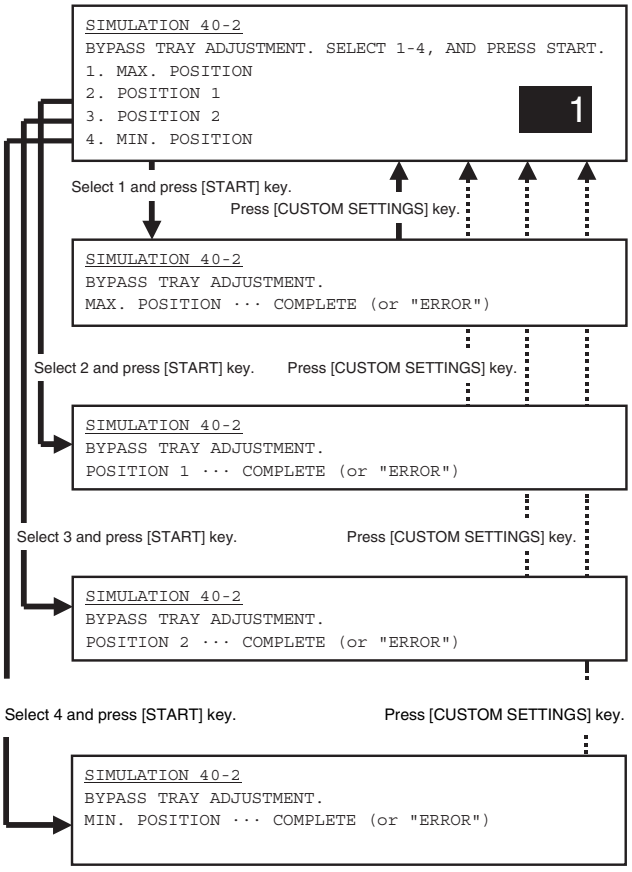

40-7

Purpose	Adjustment/Setup
Function (Purpose)	Used to enter the manual paper feed tray paper width adjustment value.
Section	Paper feed
Item	Operation

Operation/Procedure

1) Select the number corresponding to the set item with 10-key.
2) Press [START] key.
3) Enter the set value with 10-key.
4) Press [START] key.

1	MAX. POSITION	Max. width
2	POSITION 1	Adjustment point 1
3	POSITION 2	Adjustment point 2
4	MIN. POSITION	Min. value

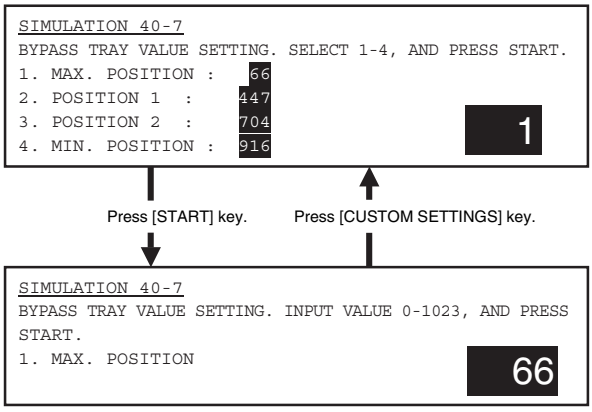

40-11

Purpose	Operation test/Check
Function (Purpose)	Used to check the multi-purpose tray width detection adjustment value.
Section	Paper feed
Item	Operation

Operation/Procedure

The operating conditions of sensors and detectors are displayed.

The active sensors and detectors are highlighted.

The paper width detection level is also displayed.

MCSS1	Tray 3 size detection 1
MCSS2	Tray 3 size detection 2
MCSS3	Tray 3 detection size 3
MCSS4	Tray 3 size detection 4
Multi Purpose Tray	(MPT width direction detection size is displayed.) A4/A3, 11X, B5/B4, 8.5X, A4R, B5R, A5R, 5.5X, 7.25X, EXTRA

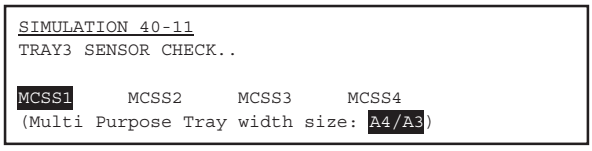

40-12

Purpose	Adjustment/Setup
Function (Purpose)	Used to check the multi-purpose tray width detection adjustment value.
Section	Paper feed
Item	Operation

Operation/Procedure

1) Open the paper feed tray 2 paper feed guide to the max. width position.
2) Select MAX POSITION with 10-key.
3) Press [START] key.
   The max. width detection level is recognized.
4) Press [CUSTOM SETTINGS] key.
5) Open the paper feed tray 3 paper feed guide to the min. width position.
6) Select MIN POSITION with 10-key.
7) Press [START] key.
   The min. width detection level is recognized.

If the above procedures are not completed normally, "ERROR" is displayed. If completed normally, "COMPLETE" is displayed.

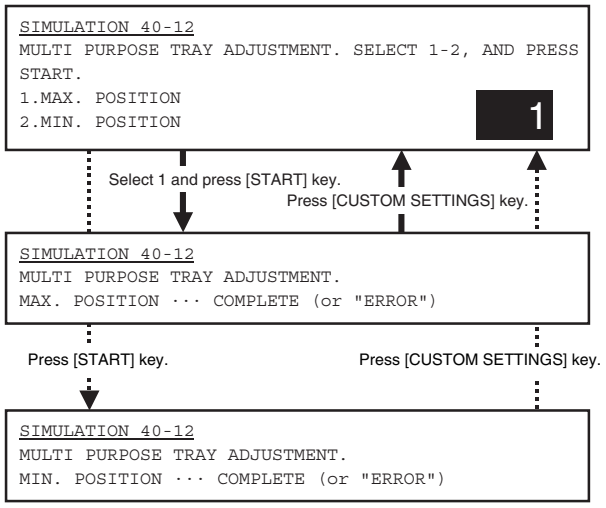

41

41-1

Purpose	Operation test/Check
Function (Purpose)	Used to check the operation of the document size sensor and the related circuit. (The operation of the document size sensor can be monitored with the LCD display.)
Section	Other
Item	Operation

Operation/Procedure

The operating conditions of sensors and detectors are displayed.

The active sensors and detectors are highlighted.

OCSW	Document cover status	Open: Normal display
		Close: Highlighted
PD1 - 7	Document detection sensor status	No document: Normal display
		Document present: Highlighted

```
SIMULATION 41-1
PD SENSOR CHECK..
OCSW  PD1  PD2  PD3  PD4  PD5  PD6  PD7
```

41-2

Purpose	Adjustment
Function (Purpose)	Used to adjust the document size sensor sensing level.
Section	Other
Item	Operation

Operation/Procedure

1) Open the document cover and select NO ORIGINAL with 10-key without placing any document on the document table.
2) Press [START] key.
   The sensor level is set without document on the document table.
3) Place an A3 document on the document table, and select A3 ORIGINAL with 10-key.
4) Press [START] key.
   The sensor level is set when detection the document.

If the above procedures are not completed normally, "ERROR" is displayed. If completed normally, "COMPLETE" is displayed.

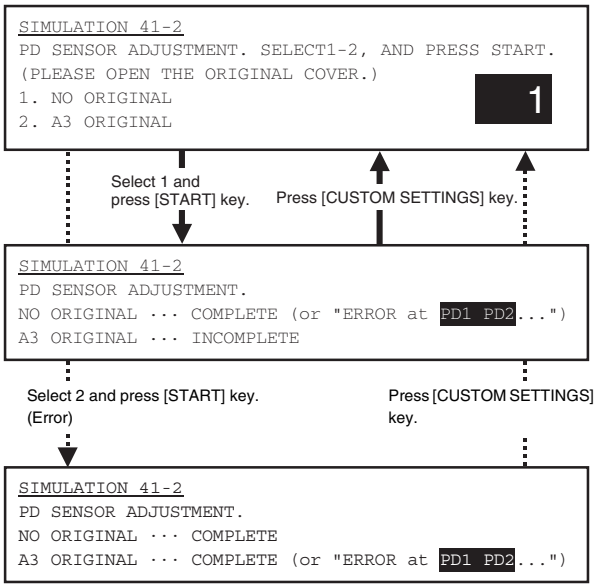

41-3

Purpose	Operation test/Check
Function (Purpose)	Used to check the operation of the document size sensor and the related circuit. (The document size sensor output level can be monitored with the LCD display.)
Section	Other
Item	Operation

Operation/Procedure

The detection output level (A/D value) of the document sensors (PD1 - PD7) is displayed in real time.

∗ The value in [ ] on the side of each sensor name indicates the threshold value.

The light receiving value (A/D value) and the threshold value (A/D value) of PD1 - PD7 are in the range of 1 - 255. The default of threshold value is 128.

OCSW	Original cover status	Open: Normal display
		Close: Highlighted
PD1 - 7	PD sensor detection level The value in [ ] indicates the adjustment threshold value (SIM41-2 adjustment value).	

```
SIMULATION 41-3
PD SENSOR DATA DISPLAY.
OCSW
PD1[128]: 200      PD2[128]: 200
PD3[128]:  50      PD4[128]:  52
PD5[128]:  51      PD6[128]:  50
PD7[128]:  52
```

43

43-1

Purpose	Setting
Function (Purpose)	Used to set the fusing temperature in each operation mode.
Section	Fixing (Fusing)
Item	Operation

Operation/Procedure

1) Select the number corresponding to the setting mode with 10-key.
2) Press [START] key.
3) Press [CUSTOM SETTINGS] key.
4) Press [START] key.

Item			Default
1	INSIDE NORMAL	Heater inside/normal	190
2	OUTSIDE NORMAL	Heater outside/normal	190
3	INSIDE PREHEAT	Heater inside/preheat	150
4	OUTSIDE PREHEAT	Heater outside/preheat	150

```
SIMULATION 43-1
FUSER TEMPERATURE SET. SELECT 1-4, AND PRESS START.
1. INSIDE NORMAL 190
2. OUTSIDE NORMAL 190
3. INSIDE PREHEAT 150
4. OUTSIDE PREHEAT 150
                                  1
```

Press [START] key. Press [CUSTOM SETTINGS] key.

```
SIMULATION 43-1
FUSER TEMPERATURE SET. INPUT VALUE, AND PRESS START.
1. INSIDE NORMAL
                                  190
```

44

44-1

Purpose	Setting
Function (Purpose)	Used to set enable/disable of correction operations in the image forming (process) section.
Section	Image process (Photoconductor/Developing/Transfer/Cleaning)
Item	Operation

Operation/Procedure

When bit =1, correction is made.

Bit	15	14	13	12	11	10	9	8	7	6	5	4	3	2	1	0
	0	0	0	0	0	0	0	0	Vg4 Vb4 Ld4	Vbr	Vg3 Vb3 Ld3	Vb1 Vb2	Ld2	Vg2	Ld1	Vg1

```
SIMULATION 44-1
PROCESS CORRECTION VALUE SETTING. INPUT VALUE 0-255
AND PRESS START.
BIT0:Vg1, BIT1:Ld1, BIT2:Vg2,  BIT3:Ld2
BIT4:Vb1, Vb2                              111
BIT5:Vg3, Vb3, Ld3
BIT6:Vbr
BIT7:Vg4, Vb4, Ld4
```

44-4

Purpose	Setup
Function (Purpose)	Used to set the target image (reference) density level in the developing bias voltage correction.
Section	Process (OPC drum, developing, transfer, cleaning)
Item	Data

Operation/Procedure

1) Select the number corresponding to the setting mode with 10-key.
2) Press [START] key.
3) Enter the set value.
4) Press [START] key.

Item		
1	TEMP. AREA *1	Process environment temperature forcible setting value (0 - 13 /normal: 0)
2	HUMIDITY AREA *1	Process environment humidity forcible setting value (0 - 14 /normal: 0)
3	S_WT	Vb rising correction standby time (0 - 180 sec/default: 90)
4	Vb1	Vb correction amount (first rotation) (0 - 150V/default: 50)
5	Vb2	Vb correction amount (second rotation) (0-50V/default: 15)

*1: Only when this value is 0, control is made with the actual measurement value of the process thermistor (temperature/humidity). When it is not 0, control is made with the forcible setting value.

```
SIMULATION 44-4
PROCESS CONTROL VALUE SETTING. SELECT 1-5 AND PRESS
START.
1.TEMP. AREA      0
2.HUMIDITY AREA   0                        3
3.S_WT  100
4.Vb1    50
5.Vb2    50
```

Press [START] key. Press [CUSTOM SETTINGS] key.

```
SIMULATION 44-4
PROCESS CONTROL VALUE SETTING. INPUT VALUE, AND PRESS
START.
3.S_WT
                                           101
```

44-9

Purpose	Adjustment/Setup/Operation data output/Check (Display/Print)
Function (Purpose)	Used to check the data related to the image forming section correction (process correction) result (corrected main charger grid voltage, the developing bias voltage, and the laser power voltage in each print mode). (This simulation allows to check that correction is performed normally or not.)
Section	Image process (Photoconductor/Developing/ Transfer/Cleaning)
Item	Data Operation data (Machine condition)

Operation/Procedure

DRUM ROTATION TIME	Drum rotation time (sec)
DEVE ROTATION TIME	Developer rotation time (sec)
Vg1 - Vg4	Grid voltage correction value
Vb1 - Vb4	Developing bias correction value
Ld1 - Ld4	Laser power correction value
DESTINATION 1	Machine CRUM destination (1-9)
DESTINATION 2	CRUM destination (1-9)

```
SIMULATION 44-9
PROCESS CONTROL DATA DISPLAY.
DRUM ROTATION TIME:01234567(sec)
DEVE ROTATION TIME:01234567(sec)
Vg1:30(V) Vg2:30(V) Vg3:30(V) Vg4:30(V)
Vb1:30(V) Vb2:10(V) Vb3:30(V) Vb4:10(V)
Ld1: 0    Ld2: 0    Ld3: 0    Ld4: 0
DESTINATION1:1
DESTINATION2:1
```

44-14

Purpose	Adjustment/Setup/Operation data output/Check (Display)
Function (Purpose)	Used to check the output level of the temperature sensor and the humidity sensor.
Section	Image process (Photoconductor/Developing)
Item	Operation

Operation/Procedure

The output levels of the temperature thermistor and the humidity thermistor in the developing unit are displayed.

TH-DV	Developing temperature thermistor	0 - 255
HUS-DV	Developing humidity thermistor	0 - 255

```
SIMULATION 44-14
SENSOR DATA DISPLAY MONITOR.
TH-DV:      255
HUS-DV:     255
```

44-16

Purpose	Adjustment/Setup/Operation data output/Check (Display)
Function (Purpose)	Used to check the toner concentration control data.
Section	Image process (Developing)
Item	Operation

Operation/Procedure

HUMIDITY AREA	Humidity area
INT HUMIDITY AREA	Humidity area in development adjustment
TEMPERATURE AREA	Temperature area
INT TEMPERATURE AREA	Temperature area in development adjustment
TARGET LEVEL	Toner control reference value
DEV REF	Development adjustment registration value
HUM	Humidity correction value
(TARGET)	Target value of humidity correction
TMP	Temperature correction value
(TARGET)	Target value of temperature correction
LIFE	Environment correction value
(TARGET)	Target value of environment correction

```
SIMULATION 44-16
TONER CONTROL STANDARD LEVEL DISPLAY.
HUMIDITY AREA: 11
INT HUMIDITY AREA: 7
TEMPERATURE AREA: 6
INT TEMPERATURE AREA: 6
TARGET LEVEL=DEV REF+HUM(TARGET)+TMP(TARGET)+LIFE(TARGET)
        133 = 118   + 10(10)    +  0(0)     +   5(5)
```

46

46-2

Purpose	Adjustment
Function (Purpose)	Used to adjust the copy density in all the copy modes (Auto, Text, Text/Photo, and Photo mode).
Item	Picture quality Density

Operation/Procedure

1) Select the number corresponding to the copy mode to be adjusted with 10-key. (Select one of 3 - 6.)
2) Press [START] key.
3) Enter the copy density level with 10-key.

Item			Set range	Default
0	TRAY SELECT	Paper feed tray selection		
1	COPY START	Copy START (Default)		
2	EXP LEVEL	Exposure level selection		
3	AE 3.0	AE mode	0 - 99	50
4	CH 3.0	Text mode 3.0		
5	MIX 3.0	Text/Photo mode 3.0		
6	PHOTO 3.0	Photo mode 3.0		

4) Press P key or [START] key.
   The adjustment value is set.
   When [START] key is pressed, copying is performed and the adjustment value is simultaneously set.
   Check the density of the printed copy image.

Normal display		NOW COPYING.
ERROR display	Door open	DOOR OPEN.
	Jam	JAM
	Paper empty	PAPER EMPTY.

NOTE: When the copy image density is adjusted with this simulation, the copy image densities of all the copy modes are changed to the copy image density level set with this simulation.
That is, the copy image density of each copy mode set with SIM 46-9, 10, 11 is changed to the copy image density level adjusted with this simulation.

To select paper (paper feed tray), perform the following procedures.

1) Enter 0 with 10-key.
2) Press [START] key. (The mode is changed to the paper feed tray selection mode.)

3) Enter the number corresponding to the paper feed tray to be used with 10-key.
4) Press [START] key. (The paper feed tray is selected.)

1	TRAY1	TRAY1
2	TRAY2	TRAY2
3	TRAY3	TRAY3
4	TRAY4	TRAY4
5	BPT	Manual feed

NOTE: When [P] key is pressed after entering an adjustment value in this simulation, the adjustment value is set. When START key is pressed, the adjustment value is set and copying is performed.

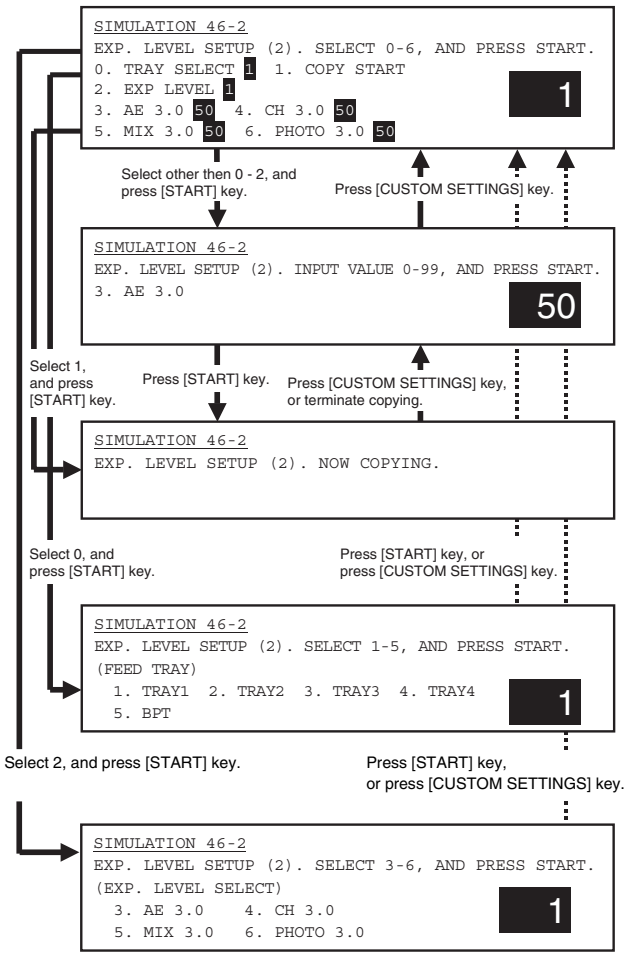

46-9

Purpose	Adjustment
Function (Purpose)	Used to adjust the print density for each density level (display value) in the copy mode (binary - Text mode). An optional print density can be set for each density level (display value).
Item	Picture quality Density

Operation/Procedure

1) Select the number corresponding to the copy density adjustment level with 10-key. (Select one of 3 - 11.)
2) Press [START] key.
3) Enter the copy density level with 10-key.

Item			Set range	Default
0	TRAY SELECT	Paper feed tray selection		
1	COPY START	Copy START (Default)		
2	EXP LEVEL	Exposure level selection		
3	1.0	Exposure level 1.0	0 - 99	50
4	1.5	Exposure level 1.5		
5	2.0	Exposure level 2.0		
6	2.5	Exposure level 2.5		
7	3.0	Exposure level 3.0		
8	3.5	Exposure level 3.5		
9	4.0	Exposure level 4.0		
10	4.5	Exposure level 4.5		
11	5.0	Exposure level 5.0		

4) Press [P] key or [START] key.
   The adjustment value is set.
   When [START] key is pressed, copying is perfumed and the adjustment value is set simultaneously.
   Check the density of printed copy image.

Normal display		NOW COPYING.
ERROR display	Door open	DOOR OPEN.
	Jam	JAM
	Paper empty	PAPER EMPTY.

To select paper (paper feed tray), perform the following procedures.

1) Enter 0 with 10-key.
2) Press [START] key. (The mode is changed to the paper feed tray selection mode.)
3) Enter the number corresponding to the paper feed tray to be used with 10-key.
4) Press [START] key. (The paper feed tray is selected.)

1	TRAY1	TRAY1
2	TRAY2	TRAY2
3	TRAY3	TRAY3
4	TRAY4	TRAY4
5	BPT	Manual feed

NOTE: When [P] key is pressed after entering an adjustment value in this simulation, the adjustment value is set. When START key is pressed, the adjustment value is set and copying is performed.

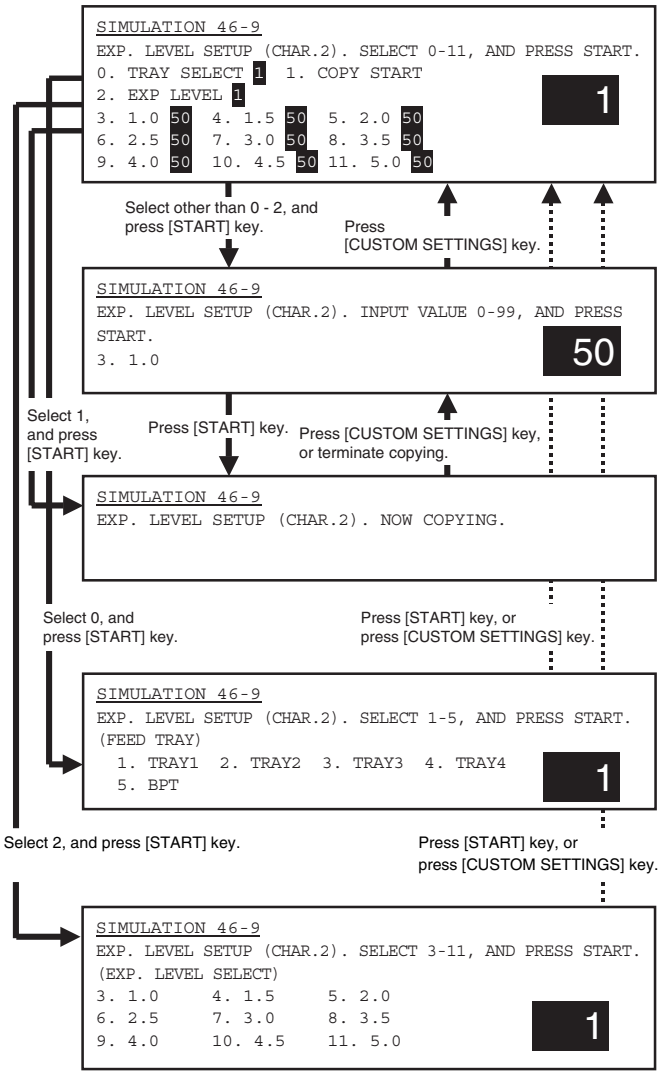

46-10

Purpose	Adjustment
Function (Purpose)	Used to adjust the print density for each density level (display value) in the copy mode (binary - Text/Photo mode). An optional print density can be set for each density level (display value).
Item	Picture quality

Operation/Procedure

1) Select the number corresponding to the copy density adjustment level with 10-key. (Select one of 3 - 11.)
2) Press [START] key.
3) Enter the copy density level with 10-key.

Item			Set range	Default
0	TRAY SELECT	Paper feed tray selection		
1	COPY START	Copy START (Default)		
2	EXP LEVEL	Exposure level selection		
3	1.0	Exposure level 1.0	0 - 99	50
4	1.5	Exposure level 1.5		
5	2.0	Exposure level 2.0		
6	2.5	Exposure level 2.5		
7	3.0	Exposure level 3.0		
8	3.5	Exposure level 3.5		
9	4.0	Exposure level 4.0		
10	4.5	Exposure level 4.5		
11	5.0	Exposure level 5.0		

4) Press [P] key or [START] key.
   The adjustment value is set.
   When [START] key is pressed, copying is perfumed and the adjustment value is set simultaneously.
   Check the density of printed copy image.

Normal display		NOW COPYING.
ERROR display	Door open	DOOR OPEN.
	Jam	JAM
	Paper empty	PAPER EMPTY.

To select paper (paper feed tray), perform the following procedures.

1) Enter 0 with 10-key.
2) Press [START] key. (The mode is changed to the paper feed tray selection mode.)
3) Enter the number corresponding to the paper feed tray to be used with 10-key.
4) Press [START] key. (The paper feed tray is selected.)

1	TRAY1	TRAY1
2	TRAY2	TRAY2
3	TRAY3	TRAY3
4	TRAY4	TRAY4
5	BPT	Manual feed

NOTE: When [P] key is pressed after entering an adjustment value in this simulation, the adjustment value is set. When START key is pressed, the adjustment value is set and copying is performed.

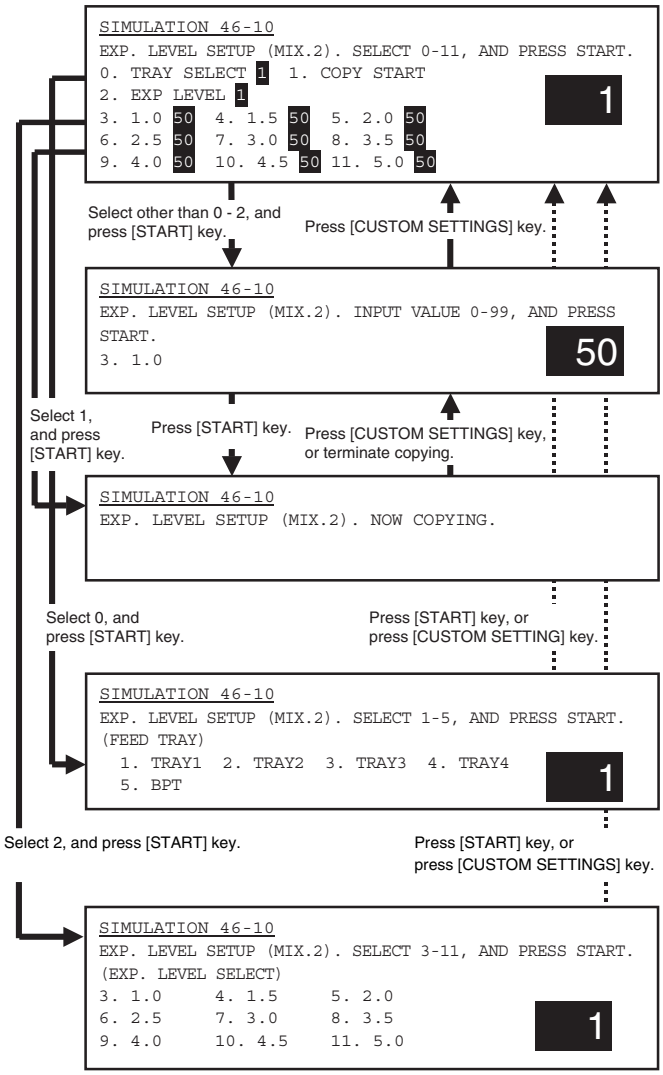

46-11

Purpose	Adjustment
Function (Purpose)	Used to adjust the print density for each density level (display value) in the copy mode (binary - Photo mode). An optional print density can be set for each density level (display value).
Item	Picture quality Density

Operation/Procedure

1) Select the number corresponding to the copy density adjustment level with 10-key. (Select one of 3 - 11.)
2) Press [START] key.
3) Enter the copy density level with 10-key.

Item			Set range	Default
0	TRAY SELECT	Paper feed tray selection		
1	COPY START	Copy START (Default)		
2	EXP LEVEL	Exposure level selection		
3	1.0	Exposure level 1.0	0 - 99	50
4	1.5	Exposure level 1.5		
5	2.0	Exposure level 2.0		
6	2.5	Exposure level 2.5		
7	3.0	Exposure level 3.0		
8	3.5	Exposure level 3.5		
9	4.0	Exposure level 4.0		
10	4.5	Exposure level 4.5		
11	5.0	Exposure level 5.0		

4) Press [P] key or [START] key.
   The adjustment value is set.
   When [START] key is pressed, copying is perfumed and the adjustment value is set simultaneously.
   Check the density of printed copy image.

Normal display		NOW COPYING.
ERROR display	Door open	DOOR OPEN.
	Jam	JAM
	Paper empty	PAPER EMPTY.

To select paper (paper feed tray), perform the following procedures.

1) Enter 0 with 10-key.
2) Press [START] key. (The mode is changed to the paper feed tray selection mode.)
3) Enter the number corresponding to the paper feed tray to be used with 10-key.
4) Press [START] key. (The paper feed tray is selected.)

1	TRAY1	TRAY1
2	TRAY2	TRAY2
3	TRAY3	TRAY3
4	TRAY4	TRAY4
5	BPT	Manual feed

NOTE: When [P] key is pressed after entering an adjustment value in this simulation, the adjustment value is set. When START key is pressed, the adjustment value is set and copying is performed.

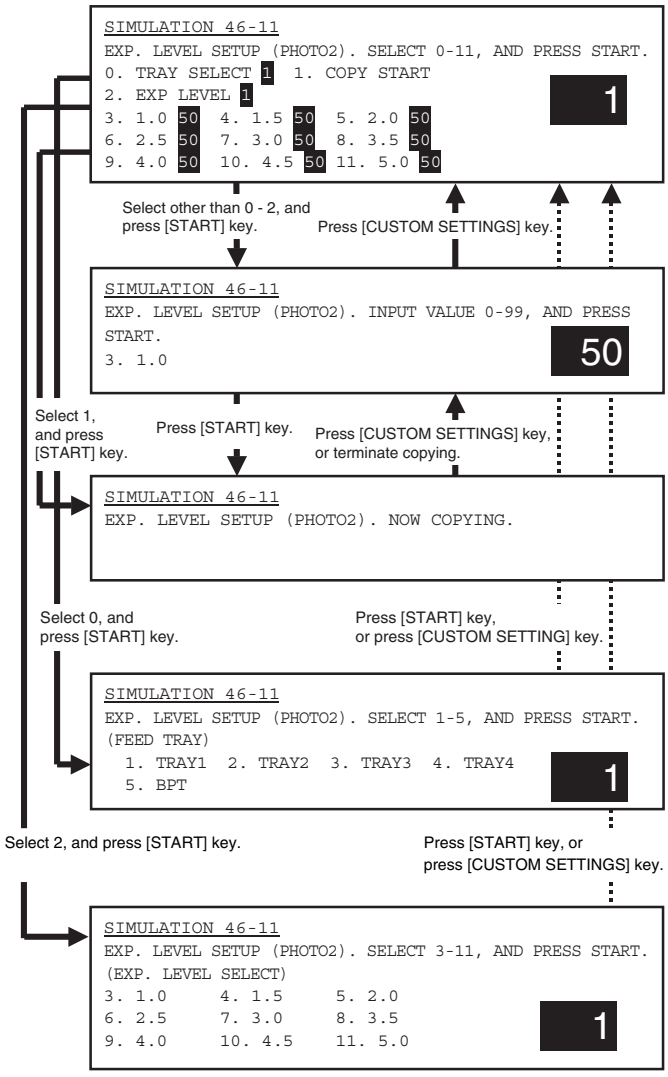

46-12

Purpose	Adjustment
Function (Purpose)	Used to adjust the print density in the FAX mode (all modes).
Item	Picture quality

Operation/Procedure

1) Select the adjustment item of FAX EXP. LEVEL with 10-key.
2) Press [START] key.
3) Enter the print density level with 10-key.

Item			Set range	Default
0	TRAY SELECT	Paper feed tray selection		
1	COPY START	Copy START (Default)		
2	FAX EXP. LEVEL	FAX mode print density	0 - 99	50

4) Press [P] key or [START] key.
   The adjustment value is set.
   When [START] key is pressed, printing is perfumed and the adjustment value is set simultaneously.
   Check the density of printed image.

Normal display		NOW PRINTING.
ERROR display	Door open	DOOR OPEN.
	Jam	JAM
	Paper empty	PAPER EMPTY.

NOTE: When the FAX print image density is adjusted with this simulation, the print image densities of all the FAX modes are changed to the image density level set with this simulation.
That is, the print image density of each FAX mode set with SIM 46-13, 14, 15 is changed to the print image density level adjusted with this simulation.

To select paper (paper feed tray), perform the following procedures.

1) Enter 0 with 10-key.
2) Press [START] key. (The mode is changed to the paper feed tray selection mode.)
3) Enter the number corresponding to the paper feed tray to be used with 10-key.
4) Press [START] key. (The paper feed tray is selected.)

1	TRAY1	TRAY1
2	TRAY2	TRAY2
3	TRAY3	TRAY3
4	TRAY4	TRAY4
5	BPT	Manual feed

NOTE: When [P] key is pressed after entering an adjustment value in this simulation, the adjustment value is set. When START key is pressed, the adjustment value is set and copying is performed.

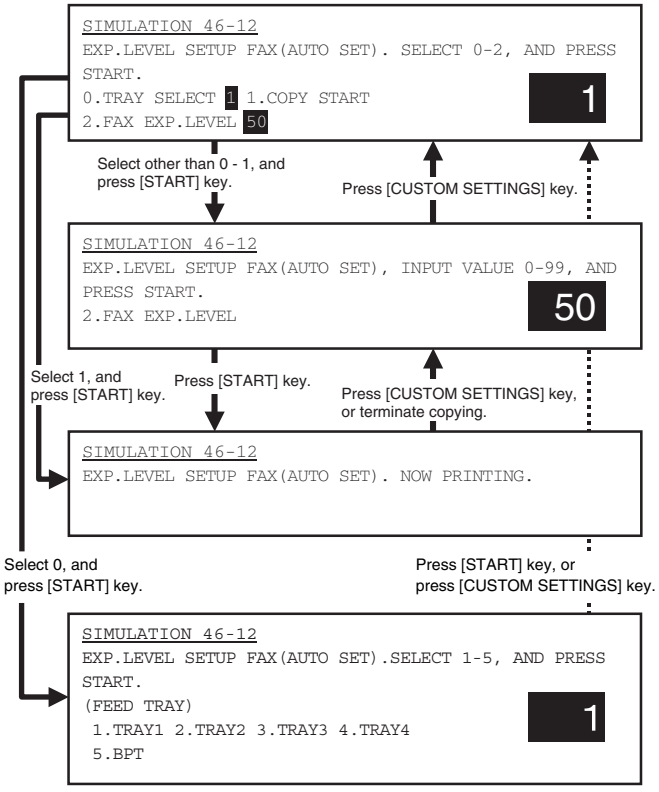

46-13

Purpose	Adjustment
Function (Purpose)	Used to adjust the print density in the FAX mode (each normal mode). (Only when FAX is installed.)
Item	Picture quality

Operation/Procedure

1) Select the number corresponding to one of the following adjustment items with 10-key.
   - ∗ Manual mode (Print density adjustment level)
   - ∗ Auto mode
2) Press [START] key.
3) Enter the print density level with 10-key.

Item			Set range	Default
0	TRAY SELECT	Paper feed tray selection		
1	PRINT START	Print start (Default)		
2	EXP LEVEL	Exposure level selection		
3	AUTO	Auto	0 - 99	50
4	1.0	Exposure level 1		
5	2.0	Exposure level 2		
6	3.0	Exposure level 3		
7	4.0	Exposure level 4		
8	5.0	Exposure level 5		

4) Press [P] key or [START] key.
   The adjustment value is set.
   When [START] key is pressed, printing is perfumed and the adjustment value is set simultaneously.
   Check the density of printed image.

Normal display		NOW PRINTING.
ERROR display	Door open	DOOR OPEN.
	Jam	JAM
	Paper empty	PAPER EMPTY.

To select paper (paper feed tray), perform the following procedures.

1) Enter 0 with 10-key.
2) Press [START] key. (The mode is changed to the paper feed tray selection mode.)
3) Enter the number corresponding to the paper feed tray to be used with 10-key.
4) Press [START] key. (The paper feed tray is selected.)

1	TRAY1	TRAY1
2	TRAY2	TRAY2
3	TRAY3	TRAY3
4	TRAY4	TRAY4
5	BPT	Manual feed

When the sum of the above set value (1 - 5) and 20 is set, the mode is changed to the duplex print mode.

NOTE: When [P] key is pressed after entering an adjustment value in this simulation, the adjustment value is set. When START key is pressed, the adjustment value is set and copying is performed.

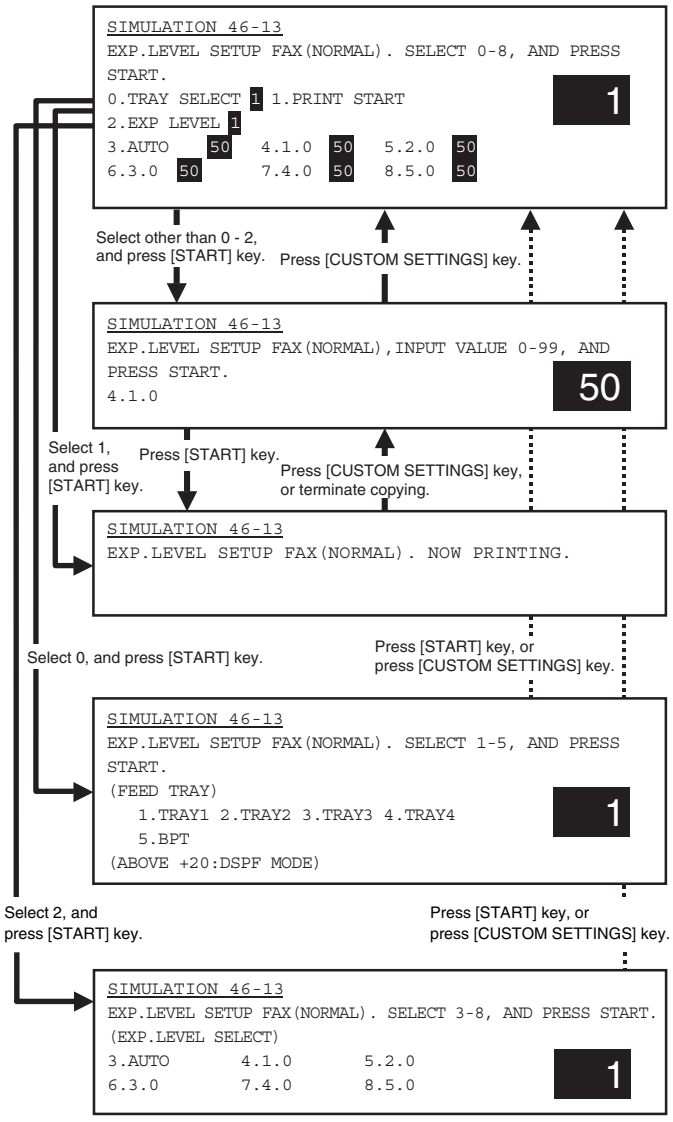

46-14

Purpose	Adjustment
Function (Purpose)	Used to adjust the print density in the FAX mode (each fine mode). (Only when FAX is installed.)
Item	Picture quality

Operation/Procedure

1) Select the number corresponding to one of the following adjustment items with 10-key. (Select one of 3 - 14.)
   - ∗ Normal mode (Print density adjustment level)
   - ∗ Normal mode (Print density adjustment level) (Half-tone mode)
   - ∗ Auto mode
   - ∗ Auto mode (Half-tone mode)
2) Enter the print density level with 10-key.

Item			Set range	Default
0	TRAY SELECT	Paper feed tray selection		
1	PRINT START	Print start (Default)		
2	EXP LEVEL	Exposure level selection		
3	AUTO	Auto	0 - 99	50
4	1.0	Exposure level 1		
5	2.0	Exposure level 2		
6	3.0	Exposure level 3		
7	4.0	Exposure level 4		
8	5.0	Exposure level 5		
9	AUTO (H)	Auto (Half-tone)		
10	1.0 (H)	Exposure level 1 (Half-tone)		
11	2.0 (H)	Exposure level 2 (Half-tone)		
12	3.0 (H)	Exposure level 3 (Half-tone)		
13	4.0 (H)	Exposure level 4 (Half-tone)		
14	5.0 (H)	Exposure level 5 (Half-tone)		

3) Press [P] key or [ATART] key.

   The entered value is set.

   When [START] key is pressed, printing is performed and the adjustment value is set simultaneously.

   Check the density of print image.

Normal display		NOW PRINTING.
ERROR display	Door open	DOOR OPEN.
	Jam	JAM
	Paper empty	PAPER EMPTY.

To select paper (paper feed tray), perform the following procedures.

1) Enter 0 with 10-key.
2) Press [START] key. (The mode is changed to the paper feed tray selection mode.)
3) Enter the number corresponding to the paper feed tray to be used with 10-key.
4) Press [START] key. (The paper feed tray is selected.)

1	TRAY1	TRAY1
2	TRAY2	TRAY2
3	TRAY3	TRAY3
4	TRAY4	TRAY4
5	BPT	Manual feed

NOTE: When [P] key is pressed after entering an adjustment value in this simulation, the adjustment value is set. When START key is pressed, the adjustment value is set and copying is performed.

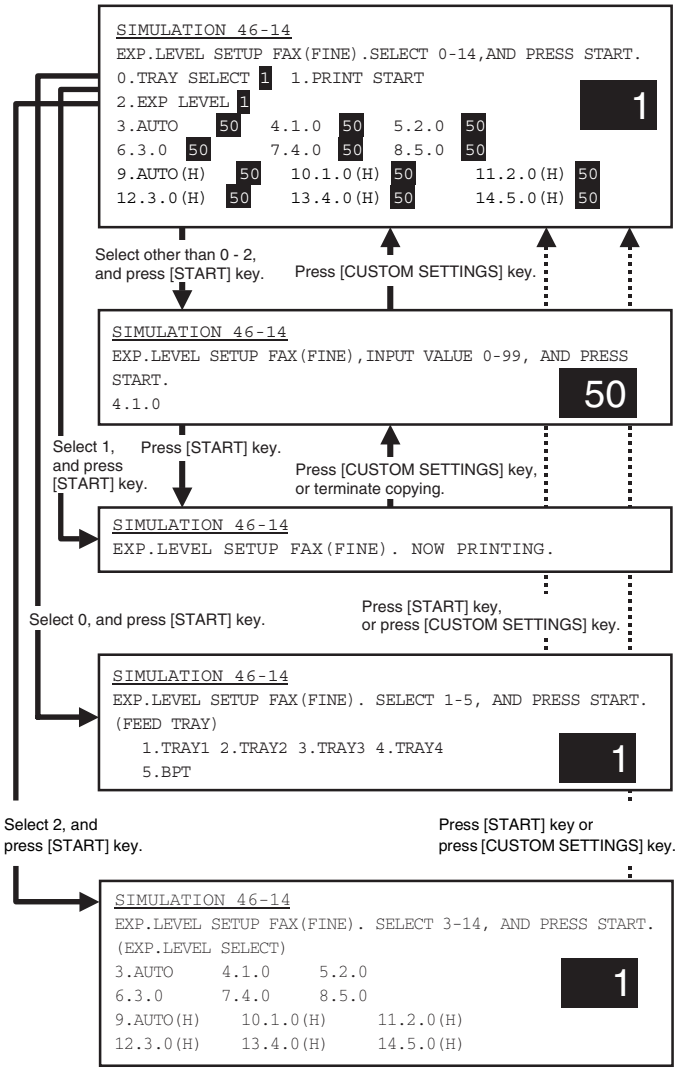

46-15

Purpose	Adjustment
Function (Purpose)	Used to adjust the print density in the FAX mode (each super fine mode). (Only when FAX is installed.)
Item	Picture quality

Operation/Procedure

1) Select the number corresponding to one of the following adjustment items with 10-key. (Select one of 3 - 14.)
   - ∗ Normal mode (Print density adjustment level)
   - ∗ Normal mode (Print density adjustment level) (Half-tone mode)
   - ∗ Auto mode
   - ∗ Auto mode (Half-tone mode)
2) Press [START] key.
3) Enter the print density level with 10-key.

Item			Set range	Default
0	TRAY SELECT	Paper feed tray selection		
1	PRINT START	Print start (Default)		
2	EXP LEVEL	Exposure level selection		
3	AUTO	Auto	0 - 99	50
4	1.0	Exposure level 1		
5	2.0	Exposure level 2		
6	3.0	Exposure level 3		
7	4.0	Exposure level 4		
8	5.0	Exposure level 5		
9	AUTO (H)	Auto (Half-tone)		
10	1.0 (H)	Exposure level 1 (Half-tone)		
11	2.0 (H)	Exposure level 2 (Half-tone)		
12	3.0 (H)	Exposure level 3 (Half-tone)		
13	4.0 (H)	Exposure level 4 (Half-tone)		
14	5.0 (H)	Exposure level 5 (Half-tone)		

4) Press [P] key or [START] key.
   The entered value is set.
   When [START] key is pressed, printing is performed and the adjustment value is set simultaneously.
   Check the density of print image.

Normal display		NOW PRINTING.
ERROR display	Door open	DOOR OPEN.
	Jam	JAM
	Paper empty	PAPER EMPTY.

To select paper (paper feed tray), perform the following procedures.

1) Enter 0 with 10-key.
2) Press [START] key. (The mode is changed to the paper feed tray selection mode.)
3) Enter the number corresponding to the paper feed tray to be used with 10-key.
4) Press [START] key. (The paper feed tray is selected.)

1	TRAY1	TRAY1
2	TRAY2	TRAY2
3	TRAY3	TRAY3
4	TRAY4	TRAY4
5	BPT	Manual feed

NOTE: When [P] key is pressed after entering an adjustment value in this simulation, the adjustment value is set. When START key is pressed, the adjustment value is set and copying is performed.

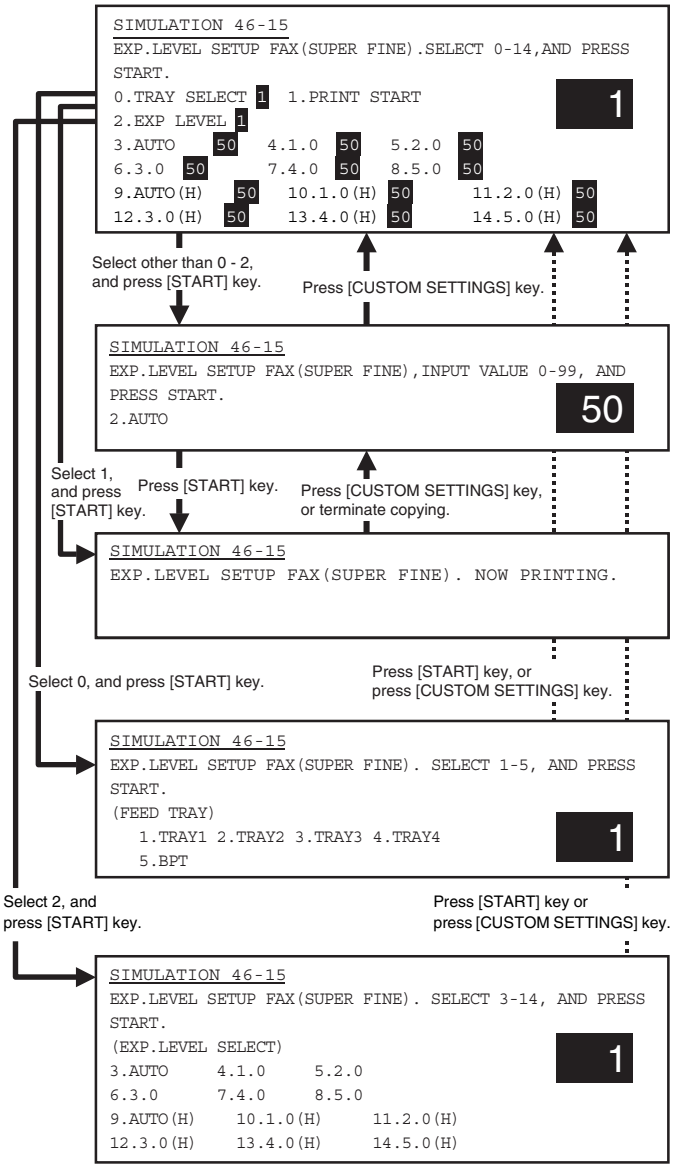

46-16

Purpose	Adjustment
Function (Purpose)	Used to adjust the print density in the FAX mode (each ultra fine mode). (Only when FAX is installed.)
Item	Picture quality

Operation/Procedure

1) Select the number corresponding to one of the following adjustment items with 10-key. (Select one of 3 - 14.)
   - ∗ Normal mode (Print density adjustment level)
   - ∗ Normal mode (Print density adjustment level) (Half-tone mode)
   - ∗ Auto mode
   - ∗ Auto mode (Half-tone mode)
2) Press [START] key.
3) Enter the print density level with 10-key.

Item			Set range	Default
0	TRAY SELECT	Paper feed tray selection		
1	PRINT START	Print start (Default)		
2	EXP LEVEL	Exposure level selection		
3	AUTO	Auto	0 - 99	50
4	1.0	Exposure level 1		
5	2.0	Exposure level 2		
6	3.0	Exposure level 3		
7	4.0	Exposure level 4		
8	5.0	Exposure level 5		
9	AUTO (H)	Auto (Half-tone)		
10	1.0 (H)	Exposure level 1 (Half-tone)		
11	2.0 (H)	Exposure level 2 (Half-tone)		
12	3.0 (H)	Exposure level 3 (Half-tone)		
13	4.0 (H)	Exposure level 4 (Half-tone)		
14	5.0 (H)	Exposure level 5 (Half-tone)		

4) Press [P] key or [START] key.
   The entered value is set.
   When [START] key is pressed, printing is performed and the adjustment value is set simultaneously.
   Check the density of print image.

Normal display		NOW PRINTING.
ERROR display	Door open	DOOR OPEN.
	Jam	JAM
	Paper empty	PAPER EMPTY.

To select paper (paper feed tray), perform the following procedures.

1) Enter 0 with 10-key.
2) Press [START] key. (The mode is changed to the paper feed tray selection mode.)
3) Enter the number corresponding to the paper feed tray to be used with 10-key.
4) Press [START] key. (The paper feed tray is selected.)

1	TRAY1	TRAY1
2	TRAY2	TRAY2
3	TRAY3	TRAY3
4	TRAY4	TRAY4
5	BPT	Manual feed

NOTE: When [P] key is pressed after entering an adjustment value in this simulation, the adjustment value is set. When START key is pressed, the adjustment value is set and copying is performed.

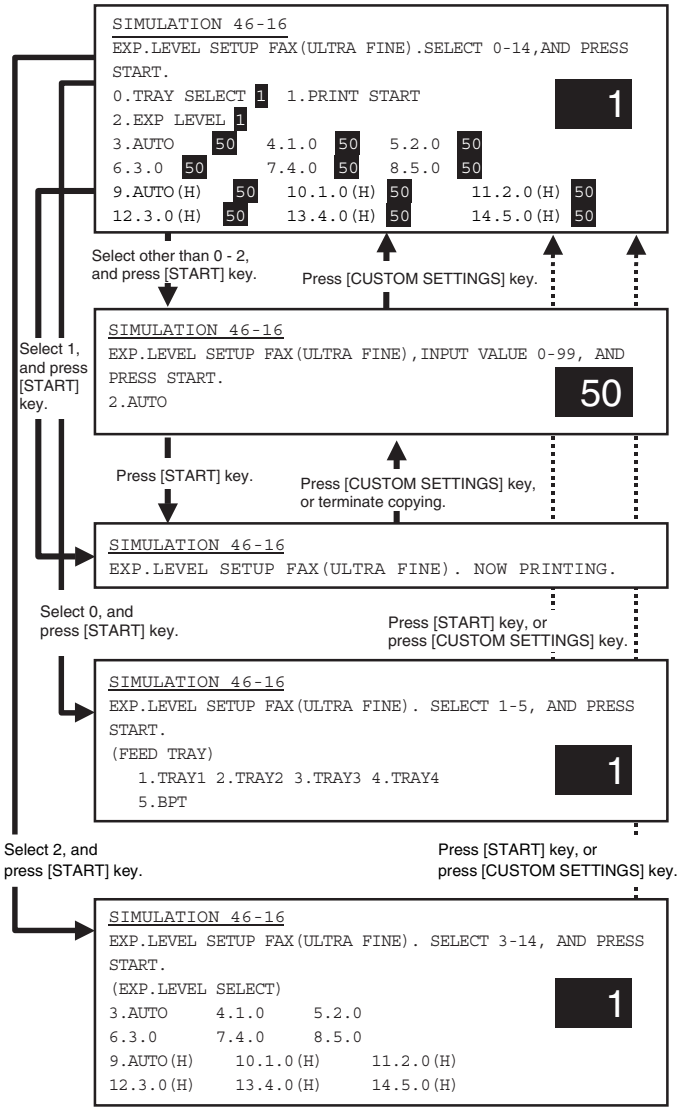

46-17

Purpose	Setting
Function (Purpose)	Used to set the gain in shading correction.
Section	Optical (Image scanning) CCD, CIS
Item	Operation

Operation/Procedure

1) Enter the number corresponding to the adjustment item
2) Press [START] key.
3) Enter the shading gain change value with 10-key.
4) Press [START] key.

There is normally no need to change the shading gain with this simulation.

Only when the scanned image density is unsatisfactory though shading is performed, the above procedure is performed.

Item		Set range	Default
1	CCD ODD	0 - 255	112
2	CCD EVEN		
3	CIS		128

```
SIMULATION 46-17
CCD/CIS SHADING GAIN DATA SETUP. SELECT 1-3, AND
PRESS START.
1.CCD ODD 112   2.CCD EVEN 112
3.CIS     128
```

Press [START] key. Press [CUSTOM SETTINGS] key.

```
SIMULATION 46-17
CCD SHADING GAIN DATA SETUP. INPUT VALUE 0-255,AND
PRESS START.
1.CCD ODD
```

112

46-18

Purpose	Adjustment
Function (Purpose)	Used to adjust the gamma (density gradient) in the copy mode.
Item	Picture quality Density

Operation/Procedure

(Copy mode selection)

1) Select the number corresponding to the copy mode to be adjusted with 10-key. (Select one of 3 - 14.)
2) Press [START] key.

(Print mode selection in the FAX mode)

1) Enter 2 with 10-key.
2) Press [START] key.
3) Select the number corresponding to one of the following adjustment items. (Select one of 3 - 14.)
   - ∗ Normal mode (Print density adjustment level)
   - ∗ Normal mode (Print density adjustment level) (Half-tone mode)
   - ∗ Auto mode
   - ∗ Auto mode (Half-tone mode)

Item			Set range	Default
0	TRAY SELECT	Paper feed tray selection		
1	PRINT START	Print start (Default)		
2	EXP LEVEL	Exposure level selection		
3	OC_AE	AE mode (OC)	0 - 127	64
4	OC_CHARA	Text mode (OC)		
5	OC_MIX	Text/Photo mode (OC)		
6	OC_PHOTO	Photo mode (OC)		
7	SPF1_AE	AE mode (SPF1)		
8	SPF1_CHARA	Text mode (SPF1)		
9	SPF1_MIX	Text/Photo mode (SPF1)		
10	SPF1_PHOTO	Photo mode (SPF1)		
11	SPF2_AE	AE mode (SPF2)		
12	SPF2_CHARA	Text mode (SPF2)		
13	SPF2_MIX	Text/Photo mode (SPF2)		
14	SPF2_PHOTO	Photo mode (SPF2)		
15	CIS_AE	AE mode (CIS)		
16	CIS_CHARA	Text mode (CIS)		
17	CIS_MIX	Text/Photo mode (CIS)		
18	CIS_PHOTO	Photo mode (CIS)		

Exposure level

Item		
3	AUTO	Auto
4	1.0	Exposure level 1
5	2.0	Exposure level 2
6	3.0	Exposure level 3
7	4.0	Exposure level 4
8	5.0	Exposure level 5
9	AUTO (H)	Auto (Half-tone)
10	1.0 (H)	Exposure level 1 (Half-tone)
11	2.0 (H)	Exposure level 2 (Half-tone)
12	3.0 (H)	Exposure level 3 (Half-tone)
13	4.0 (H)	Exposure level 4 (Half-tone)
14	5.0 (H)	Exposure level 5 (Half-tone)

4) Press [START] key.

Normal display		NOW PRINTING.
ERROR display	Door open	DOOR OPEN.
	Jam	JAM
	Paper empty	PAPER EMPTY.

(Gamma adjustment)

After completion of the above procedures, perform the following procedures.

1) Enter the gamma level with 10-key.
2) Enter [P] key or [CUSTOM SETTINGS] key.

   When [START] key is pressed, printing is performed and the adjustment value is set simultaneously.

   Check the gamma density (copy density in the low density area and the high density area) of printed copy image. The greater the adjustment value is, the greater the gamma value is, resulting in a higher contrast.

(Copy condition setting in this simulation)

To select paper (paper feed tray), perform the following procedures.

1) Enter 0 with 10-key.
2) Press [START] key. (The mode is changed to the paper feed tray selection mode.)
3) Enter the number corresponding to the paper feed tray to be used with 10-key.
4) Press [START] key. (The paper feed tray is selected.)

1	TRAY1	TRAY1
2	TRAY2	TRAY2
3	TRAY3	TRAY3
4	TRAY4	TRAY4
5	BPT	Manual feed

NOTE: When [P] key is pressed after entering an adjustment value in this simulation, the adjustment value is set. When START key is pressed, the adjustment value is set and copying is performed.

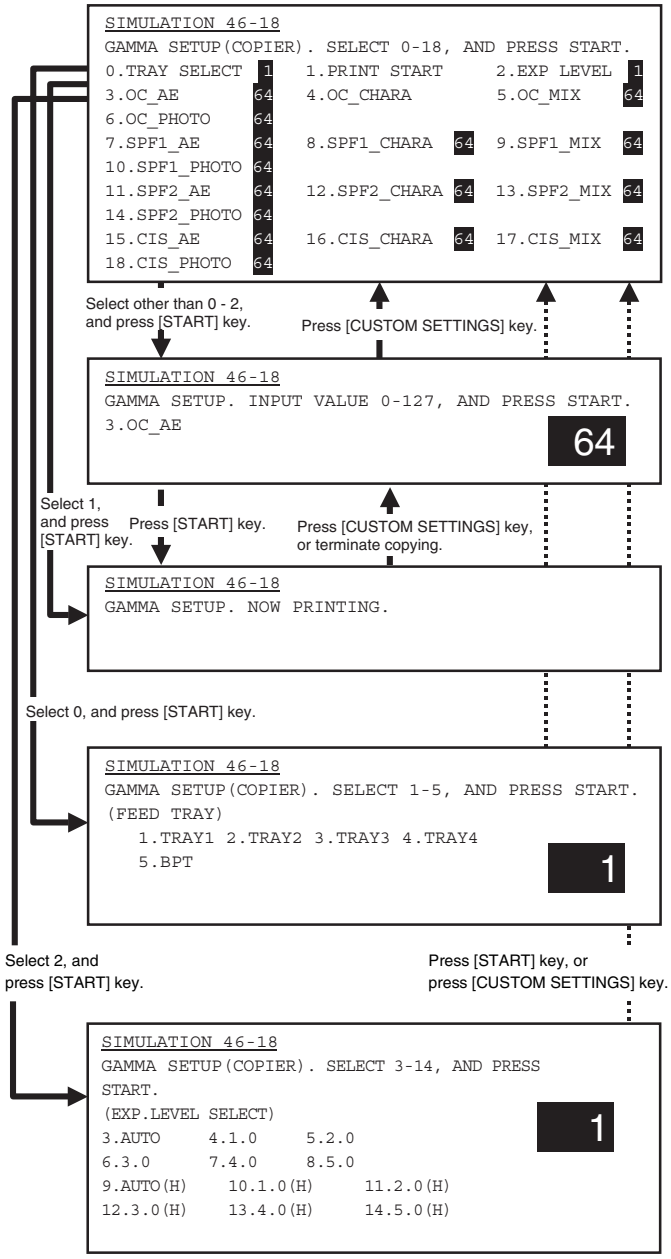

46-19

Purpose	Adjustment
Function (Purpose)	Used to set the auto mode operation specifications in each mode (copy, scan, FAX).
Item	Picture quality Density

Operation/Procedure

(Toner save operation YES/NO setting in the auto mode)

1) Select "1. AE MODE" with 1-key.
2) Press [START] key.
3) Select the number corresponding to the operation specifications with 10-key.
4) Press [START] key.
   When [START] key is pressed, the adjustment value is set.

(Operation setting in the auto copy mode)

1) Select the number corresponding to the mode with 10-key. (Select one of 2 - 4.)
2) Press [START] key.
3) Select the number corresponding to the operation mode with 10-key.
4) Press [START] key.

1	AE MODE	AE mode
2	AE STOP MODE (COPIER)	AE fixed mode (Copier)
3	AE STOP MODE (SCANNER)	AE fixed mode (Scanner)
4	AE STOP MODE (FAX)	AE fixed mode (FAX)

Mode	Set value	Item	Default
AE mode	1	Image quality priority mode (Normal mode) * Gamma is sharp to provide high contrast images.	2
	2	Toner consumption priority mode * Gamma is mild to provide low contrast images.	
AE fixed mode	0	AE fixed OFF	1 (COPIER) 0 (SCANNER/ FAX)
	1	AE fixed ON	

AE fixed OFF: The automatic density (exposure) control is performed in real time. (The density level is changed in real time according to the document pattern.)

AE fixed ON: The density at the lead edge of the document is scanned, and the overall density (exposure) level is determined according to the scanned density level. (Overall density level fixed)

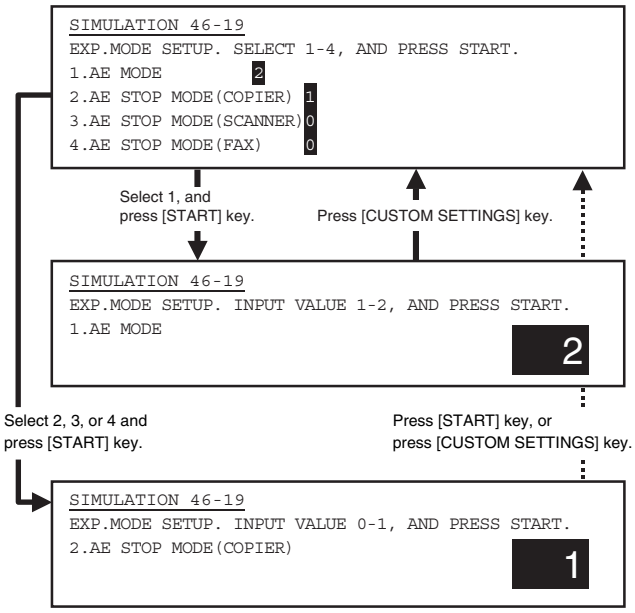

46-20

Purpose	Adjustment
Function (Purpose)	Used to adjust the copy density correction in the SPF copy mode for the document table copy mode. The adjustment is made so that the copy density becomes the same as that of the document table copy mode.
Section	SPF
Item	Picture quality Density

Operation/Procedure

(Adjustment mode selection)

1) Select the number corresponding to the copy mode to be adjusted with 10-key.

   SPF odd pixel (Front surface copy), SPF even pixel (Front surface copy), SPF (Back surface copy) (Select one of 3 - 5.)

2) Press [SATART] key.

(Copy density level adjustment)

1) Enter the density correction value with 10-key.
2) Press [P] key or [START] key.

(Copy condition setting in this simulation)

To select paper (paper feed tray), perform the following procedures.

1) Enter 0 with 10-key.
2) Press [START] key. (The mode is changed to the paper feed tray selection mode.)
3) Enter the number corresponding to the paper feed tray to be used with 10-key.
4) Press [START] key. (The paper feed tray is selected.)

NOTE: When [P] key is pressed after entering an adjustment value in this simulation, the adjustment value is set. When START key is pressed, the adjustment value is set and copying is performed.

	Item	Content	Set range	Default
0	TRAY SELECT	Paper feed tray selection 1: TRAY1 2: TRAY2 3: TRAY3 4: TRAY4 5: Manual feed	–	–
1	PRINT START	Print start (Default)	–	–
2	EXP LEVEL	Exposure level selection 3: Exposure level 1.0 4: Exposure level 1.5 5: Exposure level 2.0 6: Exposure level 2.5 7: Exposure level 3.0 8: Exposure level 3.5 9: Exposure level 4.0 10: Exposure level 4.5 11: Exposure level 5.0	–	–
3	SPF (ODD)	SPF (front) (odd pixel)	0 - 255	128
4	SPF (EVEN)	SPF (front) (even pixel)		
5	DSPF	DSPF (Back surface)		

- "Set value - 128" is added to the shading adjustment value (SIM 46-17).

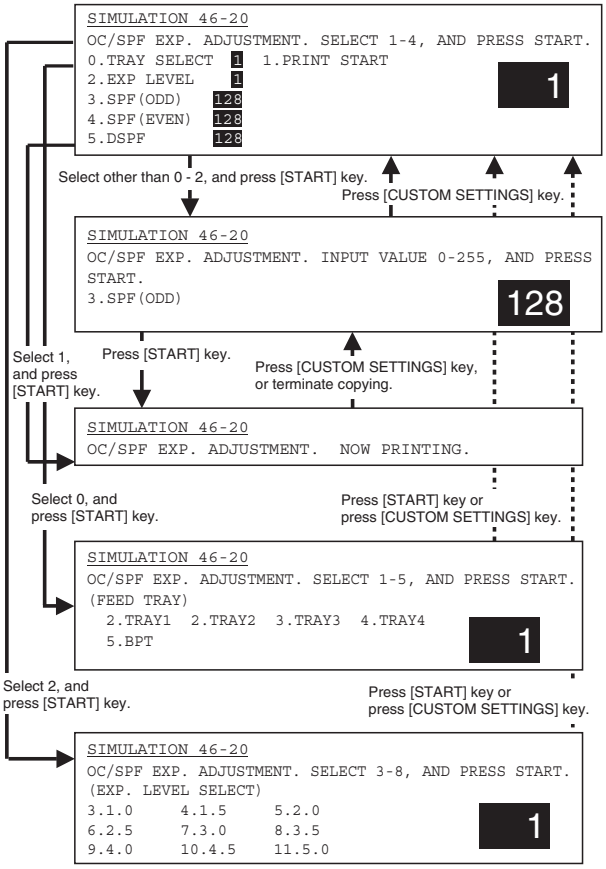

46-21

Purpose	Adjustment
Function (Purpose)	Used to adjust the scanner exposure level in all the scanner modes.
Item	Picture quality Density

Operation/Procedure

1) Select "SCANNER EXP. LEVEL" with 10-key.
2) Press [START] key.
3) Enter the image density adjustment value.
4) Press [P] key or [START] key.

NOTE: When this simulation is performed to adjust the scan image densities, all the image densities in all the scan modes are changed to the image density level set with this simulation.

That is, the image densities set with SIM 46-22, 23, 24, 25, and 45 are changed to the image density level set with this simulation.

	Item		Set range	Default
0	SCANNER EXP. LEVEL	Image density level	0 - 99	50

NOTE: Only the set value is changed and no printing is performed.

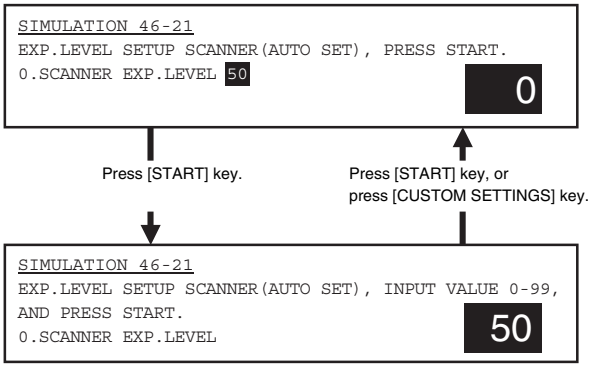

46-22

Purpose	Adjustment
Function (Purpose)	Used to adjust the scanner exposure level in the normal text mode.
Item	Picture quality Density

Operation/Procedure

1) Select the number corresponding to one of the following adjustment items with 10-key. (Select one of 0 - 5.)
   - ∗ Normal mode (Image density adjustment level)
   - ∗ Auto mode
2) Press [START] key.
3) Enter the image density adjustment value with 10-key.
4) Press [START] key or press [CUSTOM SETTINGS] key.
   The adjustment value is set.

Item			Set range	Default
0	AUTO	Auto	0 - 99	50
1	1.0	Exposure level 1		
2	2.0	Exposure level 2		
3	3.0	Exposure level 3		
4	4.0	Exposure level 4		
5	5.0	Exposure level 5		

NOTE: Only the set value is changed and no printing is performed.

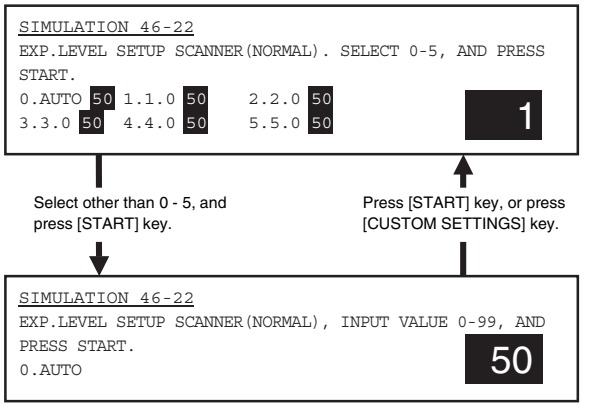

46-23

Purpose	Adjustment
Function (Purpose)	Used to adjust the scanner exposure level in the fine text mode.
Item	Picture quality Density

Operation/Procedure

1) Select the number corresponding to one of the following adjustment items with 10-key. (Select one of 0 - 11.)
   - ∗ Normal mode (Image density adjustment level)
   - ∗ Normal mode (Image density adjustment level) (Half-tone mode)
   - ∗ Auto mode
   - ∗ Auto mode (Half-tone mode)
2) Press [START] key.
3) Enter the image density adjustment value with 10-key.
4) Press [START] key or press [P] key.
   The adjustment value is set.

Item			Set range	Default
0	AUTO	Auto	0 - 99	50
1	1.0	Exposure level 1		
2	2.0	Exposure level 2		
3	3.0	Exposure level 3		
4	4.0	Exposure level 4		
5	5.0	Exposure level 5		
6	AUTO (H)	Auto (Half-tone)		
7	1.0 (H)	Exposure level 1 (Half-tone)		
8	2.0 (H)	Exposure level 2 (Half-tone)		
9	3.0 (H)	Exposure level 3 (Half-tone)		
10	4.0 (H)	Exposure level 4 (Half-tone)		
11	5.0 (H)	Exposure level 5 (Half-tone)		

NOTE: Only the set value is changed and no printing is performed.

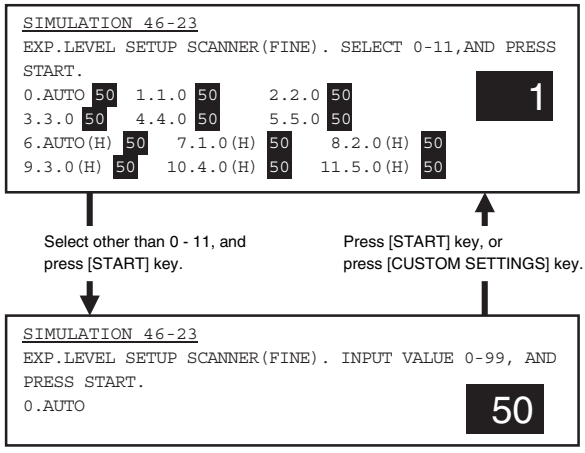

46-24

Purpose	Adjustment
Function (Purpose)	Used to adjust the scanner exposure level (in the super fine text mode).
Item	Picture quality Density

Operation/Procedure

1) Select the number corresponding to one of the following adjustment items with 10-key. (Select one of 0 - 11.)
   - ∗ Normal mode (Image density adjustment level)
   - ∗ Normal mode (Image density adjustment level) (Half-tone mode)
   - ∗ Auto mode
   - ∗ Auto mode (Half-tone mode)
2) Press [START] key.
3) Enter the image density adjustment value with 10-key.
4) Press [START] key or press [P] key.
   The adjustment value is set.

Item			Set range	Default
0	AUTO	Auto	0 - 99	50
1	1.0	Exposure level 1		
2	2.0	Exposure level 2		
3	3.0	Exposure level 3		
4	4.0	Exposure level 4		
5	5.0	Exposure level 5		
6	AUTO (H)	Auto (Half-tone)		
7	1.0 (H)	Exposure level 1 (Half-tone)		
8	2.0 (H)	Exposure level 2 (Half-tone)		
9	3.0 (H)	Exposure level 3 (Half-tone)		
10	4.0 (H)	Exposure level 4 (Half-tone)		
11	5.0 (H)	Exposure level 5 (Half-tone)		

NOTE: Only the set value is changed and no printing is performed.

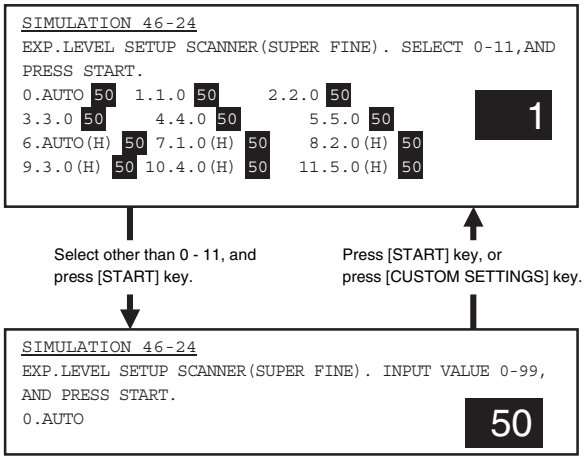

46-25

Purpose	Adjustment
Function (Purpose)	Used to adjust the scanner exposure level in the ultra fine text mode.
Item	Picture quality Density

Operation/Procedure

1) Select the number corresponding to one of the following adjustment items with 10-key. (Select one of 0 - 11.)
   - ∗ Normal mode (Image density adjustment level)
   - ∗ Normal mode (Image density adjustment level) (Half-tone mode)
   - ∗ Auto mode
   - ∗ Auto mode (Half-tone mode)
2) Press [START] key.
3) Enter the image density adjustment value with 10-key.
4) Press [START] key or press [P] key.

The adjustment value is set.

Item			Set range	Default
0	AUTO	Auto	0 - 99	50
1	1.0	Exposure level 1		
2	2.0	Exposure level 2		
3	3.0	Exposure level 3		
4	4.0	Exposure level 4		
5	5.0	Exposure level 5		
6	AUTO (H)	Auto (Half-tone)		
7	1.0 (H)	Exposure level 1 (Half-tone)		
8	2.0 (H)	Exposure level 2 (Half-tone)		
9	3.0 (H)	Exposure level 3 (Half-tone)		
10	4.0 (H)	Exposure level 4 (Half-tone)		
11	5.0 (H)	Exposure level 5 (Half-tone)		

NOTE: Only the set value is changed and no printing is performed.

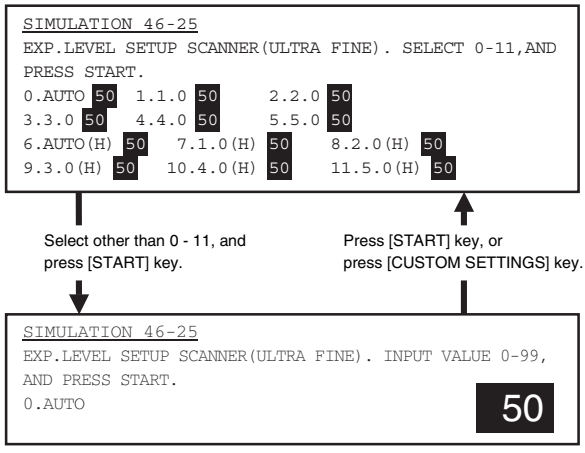

46-27

Purpose	Adjustment
Function (Purpose)	Used to adjust the gamma (density gradient) of the network scanner mode.
Item	Picture quality

Operation/Procedure

(Scanner mode selection)

1) Select the number corresponding to the scanner mode to be adjusted with 10-key. (Select one of 1 - 9.)
2) Press [START] key.

(Gamma adjustment)

1) Enter the gamma level with 10-key.
2) Press [START] key.

The greater the adjustment value is, the greater the gamma is, resulting in a higher contrast.

Item			Set range	Default
1	OC_Fine.HT	Fine text (Half-tone) (OC)	0 - 127	64
2	OC_SFine.HT	Super fine (Half-tone) (OC)		
3	OC_UFine.HT	Ultra fine (Half-tone) (OC)		
4	SPF1_Fine.HT	Fine text (Half-tone) (SPF1)		
5	SPF1_SFine.HT	Super fine (Half-tone) (SPF1)		
6	SPF1_UFine.HT	Ultra fine (Half-tone) (SPF1)		
7	SPF2_Fine.HT	Fine text (Half-tone) (SPF2)		
8	SPF2_SFine.HT	Super fine (Half-tone) (SPF2)		
9	SPF2_UFine.HT	Ultra fine (Half-tone) (SPF2)		
10	CIS_Fine.HT	Fine text (Half-tone) (CIS)		
11	CIS_SFine.HT	Super fine (Half-tone) (CIS)		
12	CIS_UFine.HT	Ultra fine (Half-tone) (CIS)		

```
SIMULATION 46-27
GAMMA SETUP(SCANNER). SELECT 1-12, AND PRESS START.
1.OC_Fine.HT   64 2.OC_SFine.HT   64 3.OC_UFine.HT   64
4.SPF1_Fine.HT 64 5.SPF1_SFine.HT 64 6.SPF1_UFine.HT 64
7.SPF2_Fine.HT 64 8.SPF2_SFine.HT 64 9.SPF2_UFine.HT 64
10.CIS_Fine.HT 64 11.CIS_SFine.HT 64 12.CIS_UFine.HT 64
```

46-31

Purpose	Adjustment
Function (Purpose)	Used to adjust sharpness of the copy mode.
Item	Picture quality

Operation/Procedure

(Copy mode selection)

1) Select the number corresponding to the copy mode to be adjusted with 10-key. (Select one of 1 - 16.)
2) Press [START] key.

(Sharpness adjustment)

1) Enter the sharpness level with 10-key.
2) Press [START] key.

The greater the adjustment value is, the greater the sharpness is.

Item			Set range	Default
1	OC_AE	AE mode (OC)	1 - 5	3
2	OC_CHARA	Text mode (OC)		
3	OC_MIX	Text/Photo mode (OC)		
4	OC_PHOTO	Photo mode (OC)		
5	SPF1_AE	AE mode (SPF1)		
6	SPF1_CHARA	Text mode (SPF1)		
7	SPF1_MIX	Text/Photo mode (SPF1)		
8	SPF1_PHOTO	Photo mode (SPF1)		
9	SPF2_AE	AE mode (SPF2)		
10	SPF2_CHARA	Text mode (SPF2)		
11	SPF2_MIX	Text/Photo mode (SPF2)		
12	SPF2_PHOTO	Photo mode (SPF2)		
13	CIS_AE	AE mode (CIS)		
14	CIS_CHARA	Text mode (CIS)		
15	CIS_MIX	Text/Photo mode (CIS)		
16	CIS_PHOTO	Photo mode (CIS)		

∗ SPF1: DSPF front surface (CCD)

∗ SPF2: DSPF back surface (CCD)

```
SIMULATION 46-31
SHARPNESS LEVEL SETUP. SELECT 1-12, AND PRESS START.
1.OC_AE 3       2.OC_CHARA 3     3.OC_MIX 3
4.OC_PHOTO 3    5.SPF1_AE 3      6.SPF1_CHARA 3
7.SPF1_MIX 3    8.SPF1_PHOTO 3   9.SPF2_AE 3
10.SPF2_CHARA 3 11.SPF2_MIX 3    12.SPF2_PHOTO 3
13.CIS_AE 3     14.CIS_CHARA 3   15.CIS_MIX 3
16.CIS_PHOTO 3
```

Press [START] key. Press [CUSTOM SETTINGS] key.

```
SIMULATION 46-31
SHARPNESS LEVEL SETUP. INPUT VALUE 0-3, AND PRESS
START.
1.OC_AE                                        3
```

46-39

Purpose	Adjustment
Function (Purpose)	Used to adjust sharpness of the FAX mode.
Item	Picture quality

Operation/Procedure

1) Enter the sharpness level with 10-key.
2) Press [START] key.

The greater the adjustment value is, the greater the sharpness is.

Default: 3 (Normal), 1 (Halftone)

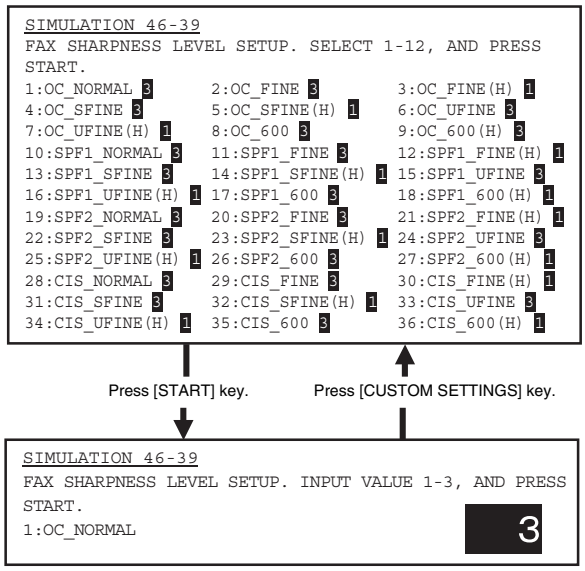

46-45

Purpose	Adjustment
Function (Purpose)	Used to adjust the image density in the FAX mode (600dpi).
Item	Picture quality

Operation/Procedure

1) Select the number corresponding to one of the following adjustment items with 10-key. (Select one of 0 - 11.)
   - ∗ Normal mode (Image density adjustment level)
   - ∗ Normal mode (Image density adjustment level) (Half-tone mode)
   - ∗ Auto mode
   - ∗ Auto mode (Half-tone mode)
2) Press [START] key.
3) Enter the image density adjustment value with 10-key.
4) Press [START] key or press [P] key.
   The adjustment value is set.

Item			Set range	Default
0	AUTO	Auto	0 - 99	50
1	1.0	Exposure level 1		
2	2.0	Exposure level 2		
3	3.0	Exposure level 3		
4	4.0	Exposure level 4		
5	5.0	Exposure level 5		
6	AUTO (H)	Auto (Half-tone)		
7	1.0 (H)	Exposure level 1 (Half-tone)		
8	2.0 (H)	Exposure level 2 (Half-tone)		
9	3.0 (H)	Exposure level 3 (Half-tone)		
10	4.0 (H)	Exposure level 4 (Half-tone)		
11	5.0 (H)	Exposure level 5 (Half-tone)		

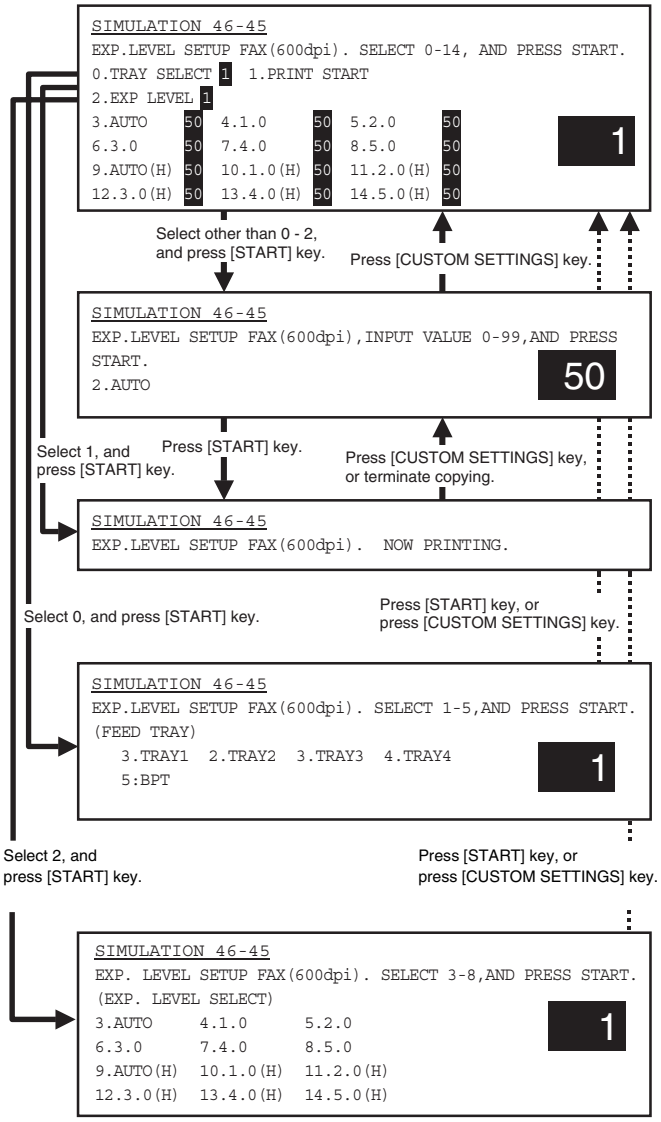

46-46

Purpose	Adjustment
Function (Purpose)	Used to adjust sharpness of the scanner mode.
Item	Picture quality

Operation/Procedure

1) Enter the sharpness level with 10-key.
2) Press [START] key.

The greater the adjustment value is, the greater the sharpness is.

Set range: 1 - 3

Default: 3 (Normal), 1 (Halftone)

```
SIMULATION 46-46
SCANNER SHARPNESS LEVEL SETUP. SELECT 1-28, AND PRESS
START.
1:OC_NORMAL 3        2:OC_FINE 3          3:OC_FINE(H) 1
4:OC_SFINE 3         5:OC_SFINE(H) 1      6:OC_UFINE 3
7:OC_UFINE(H) 1
8:SPF1_NORMAL 3      9:SPF1_FINE 3        10:SPF1_FINE(H) 1
11:SPF1_SFINE 3      12:SPF1_SFINE(H) 1   13:SPF1_UFINE 3
14:SPF1_UFINE(H) 1
15:SPF2_NORMAL 3     16:SPF2_FINE 3       17:SPF2_FINE(H) 1
18:SPF2_SFINE 3      19:SPF2_SFINE(H) 1   20:SPF2_UFINE 3
21:SPF2_UFINE(H) 1
22:CIS_NORMAL 3      23:CIS_FINE 3        24:CIS_FINE(H) 1
25:CIS_SFINE 3       26:CIS_SFINE(H) 1    27:CIS_UFINE 3
28:CIS_UFINE(H) 1
```

Press [START] key. Press [CUSTOM SETTINGS] key.

```
SIMULATION 46-46
SCANNER SHARPNESS LEVEL SETUP. INPUT VALUE 1-3, AND
PRESS START.
1:OC_NORMAL                                    3
```

48

48-1

Purpose	Adjustment
Function (Purpose)	Used to adjust the copy magnification ratio (in the main scanning and the sub scanning directions).
Section	Optical (Image scanning)
Item	Picture quality

Operation/Procedure

(Adjustment mode selection)

1) Select the number corresponding to the copy mode to be adjusted with 10-key. (Select one of 3 - 7.)
2) Press [START] key.

Item			Set range	Default
0	TRAY SELECT	Paper feed tray selection	1 - 5	–
1	COPY START	Copy START (Default)	–	–
2	MAGNIFICATION	Print magnification ratio	25 - 400%	–
3	CCD (MAIN)	SCAN main scanning magnification ratio adjustment (CCD)	0 - 99	50
4	CCD (SUB)	SCAN sub scanning magnification ratio adjustment (CCD)		
5	SPF (MAIN)	SPF front surface magnification ratio adjustment (Main scan)		
6	SPF (SUB)	SPF front surface magnification ratio adjustment (Sub scan)		
7	CIS (MAIN)	SPF back surface magnification ratio adjustment (CIS main scan)		

(Copy magnification ratio adjustment)

1) Select the number corresponding to the copy magnification ratio adjustment mode to be adjusted with 10-key. (Select one of 3 - 7.)
2) Press [START] key.
3) Enter the copy magnification ratio adjustment value with 10-key.
4) Press [P] key or [START] key.

   When the [START] key is pressed, copying is performed and the adjustment value is set simultaneously.

   The copy magnification ratio in the sub scan direction can be adjusted by changing the scan speed (motor RPM).

Normal display		NOW COPYING.
ERROR display	Door open	DOOR OPEN.
	Jam	JAM
	Paper empty	PAPER EMPTY.

The greater the value is, the greater the correction is. One step corresponds to 0.1% adjustment.

(Copy condition setting in this simulation)

∗ To select paper (paper feed tray), perform the following procedures.

1) Enter 0 with 10-key.
2) Press [START] key. (The mode is changed to the paper feed tray selection mode.)
3) Enter the number corresponding to the paper feed tray of the selected paper with 10-key. (Select one of 1 - 5.)
4) Press [START] key. (The paper feed tray is selected.)

1	TRAY1	TRAY1
2	TRAY2	TRAY2
3	TRAY3	TRAY3
4	TRAY4	TRAY4
5	BPT	Manual feed

When the total of the above set value (1 - 5) and 10 is entered, the mode is changed to the duplex mode.

∗ The copy magnification ratio can be set with the following

1) Enter 2 with 10-key.
2) Press [START] key.
3) Enter the copy magnification ratio with 10-key.
4) Press [START] key.

Set range	25 - 400%

NOTE: When [P] key is pressed after entering the adjustment value, the adjustment value is set. When [START] key is pressed instead, the adjustment value is set and copying is performed.

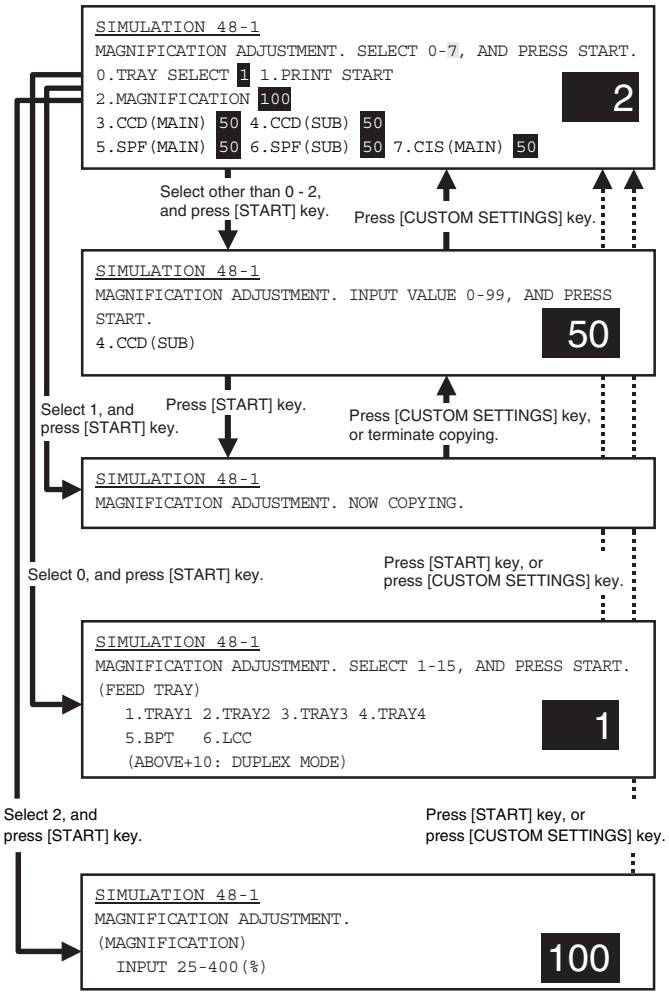

48-5

Purpose	Adjustment
Function (Purpose)	Used to adjust the copy magnification ratio in the sub scanning direction.
Section	Optical (Image scanning)
Item	Picture quality

Operation/Procedure

When the sub scanning direction image magnification ratio adjustment with SIM 48-1 cannot provide a satisfactory result if a different magnification ration is set and a copy is made, perform this simulation.

When there is an error in the copy magnification ratio in reduction copy, change the adjustment value of the high speed mode. When there is an error in the copy magnification ratio in enlargement copy, change the adjustment value of the low speed mode.

1) Select the number corresponding to the adjustment mode with 10-key.
2) Press [START] key.
3) Enter the copy adjustment value with 10-key.
   The scanner/SPF motor rotation sped adjustment value is entered.

Item		Content	Set range	Default
0	MIR (220)	Mirror motor (220mm/sec)	0 - 99	50
1	MIR (169)	Mirror motor (168.7mm/sec)		
2	MIR (110)	Mirror motor (110mm/sec)		
3	MIR (55)	Mirror motor (55mm/sec)		
4	SPF (220)	SPF motor (220mm/sec)		
5	SPF (110)	SPF motor (110mm/sec)		

4) Press [START] key.

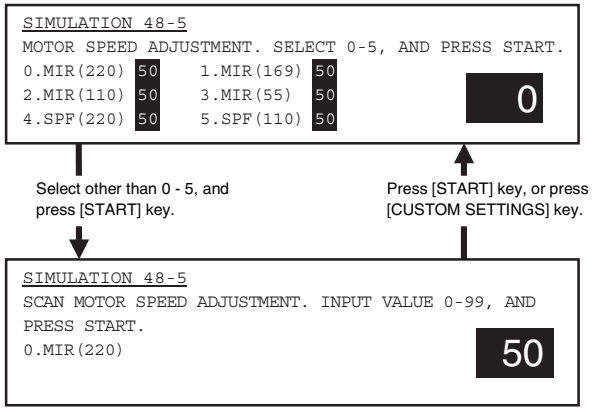

48-6

Purpose	Adjustment
Function (Purpose)	HSYNC cycle adjustment
Item	Picture quality

Operation/Procedure

(Adjustment mode selection)

1) Select the number corresponding to the HSYNC cycle to be adjusted with 10-key. (Select one of 3.)
2) Press [START] key.

Item			Set range	Default
0	TRAY SELECT	Paper feed tray selection	–	–
1	COPY START	Copy START (Default)	–	–
2	MAGNIFICATION	Print magnification ratio	25 - 400	–
3	CIS	CIS HSYNC cycle	40 - 60	50

(HSYNC cycle adjustment)

1) Select the number corresponding to the HSYNC cycle to be adjusted with 10-key. (Select one of 3.)
2) Press [START] key.
3) Enter the HSYNC cycle adjustment value with 10-key.
4) Press [START] key.
   When the [START] key is pressed, copying is performed and the adjustment value is set simultaneously.

Normal display		NOW COPYING.
ERROR display	Door open	DOOR OPEN.
	Jam	JAM
	Paper empty	PAPER EMPTY.

(Copy condition setting in this simulation)

∗ To select paper (paper feed tray), perform the following procedures.

1) Enter 0 with 10-key.
2) Press [START] key. (The mode is changed to the paper feed tray selection mode.)
3) Enter the number corresponding to the paper feed tray of the selected paper with 10-key. (Select one of 1 - 5.)
4) Press [START] key. (The paper feed tray is selected.)

1	TRAY1	TRAY1
2	TRAY2	TRAY2
3	TRAY3	TRAY3
4	TRAY4	TRAY4
5	BPT	Manual feed

When the total of the above set value (1 - 5) and 10 is entered, the mode is changed to the duplex mode.

∗ The copy magnification ratio can be set with the following

1) Enter 2 with 10-key.
2) Press [START] key.
3) Enter the copy magnification ratio with 10-key.
4) Press [START] key.

Set range	25 - 400%

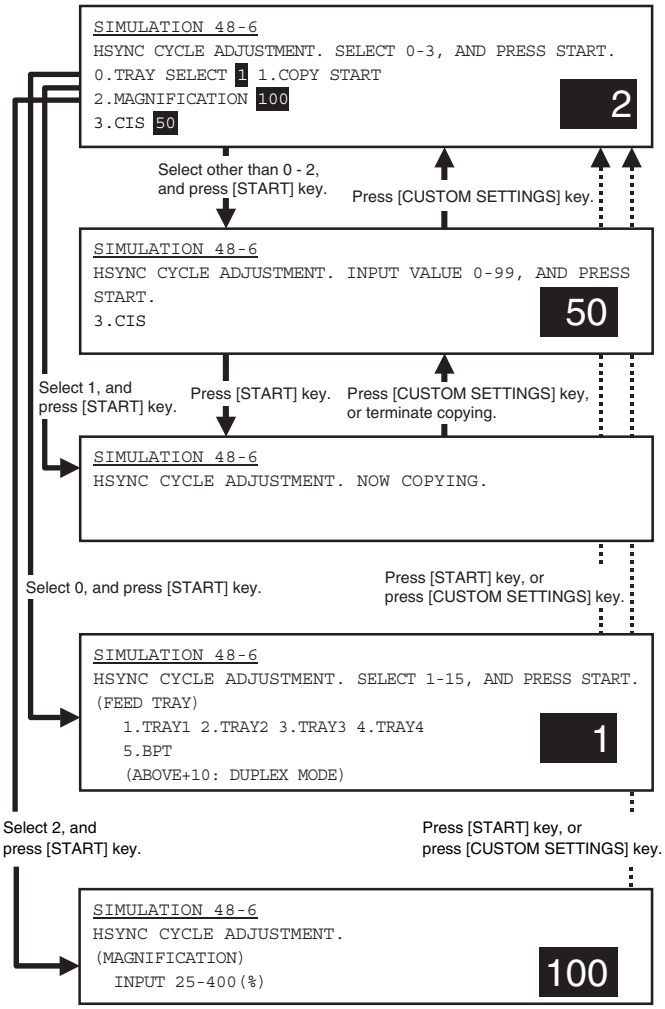

50

50-1

Purpose	Adjustment
Function (Purpose)	Used to adjust the copy image position and the void area (image loss) adjustment on print paper in the copy mode. (The similar adjustment can be performed with SIM 50-5 and 50-2 (Simplified method).) (Document table mode)
Item	Picture quality　　Image position

Operation/Procedure

(Lead edge image loss/void area adjustment)

1) Set the lead edge image loss adjustment value (LEAD EDGE) and the paper lead edge void adjustment value (DENA) as follows.

   (Standard set value) Lead edge image loss: 1.5mm (LEDA: 15)

   Paper lead edge void: 3.5mm (DENA: 35)

   ∗ Set LEAD to 15. (Enter 15 as the adjustment value of LEAD, and press [P] key.) (0.1mm/step)

   ∗ Set DENA to 35. (Enter 35 as the adjustment value of DENA, and press [P] key.) (0.1mm/step)

2) Make a copy at the normal ratio (100%) and check the lead edge void area and the image loss. (Enter 100 as the set value of the copy magnification ratio (MAGNIFICATION), and press [START] key.)

3) If the adjustment result is not satisfactory, perform the following procedures.

   ∗ If the lead edge void are is not 3.5mm:
   Change the adjustment value of RRCB and perform the adjustment. (Change the adjustment value of RRCB and press [START] key.) (1msec/step)

   ∗ If the lead edge image loss is not 1.5mm:
   Change the adjustment value of RRCA and perform the adjustment. (Change the adjustment value of RRCA and press [START] key.)
   (Shift for the adjustment value change: 0.2mm/step)

(Rear edge void area adjustment)

Adjust so that the rear edge void area is 3.5mm. (Change the adjustment value of TRAIL EDGE, and press [START] key.)

(Front/rear frame direction image loss adjustment)

Set the adjustment value of SIDE to 20. (Enter 20 as the adjustment value of SIDE, and press [P] key.)

When the adjustment value is changed, the image position is shifted in the front/rear frame direction.

(Front/rear frame direction void area adjustment)

Adjust so that the total of the front/rear direction void areas is 7.0mm. (Change the adjustment values of FRONT/REAR, and press [START] key.)

Front frame void area = 3.5mm　　Rear frame void area = 3.5mm

If, as shown above, the front and the rear void areas are not even, use SIM 50-5 to adjust the image off-center position.

	Item	Content	Set range	Default
0	TRAY SELECT	Paper feed tray selection	1 - 5	–
1	COPY START	Copy START (Default)	–	–
2	MAGNIFICATION	Print magnification ratio	25 - 400%	–
(Lead edge adjustment value)				
3	RRCA	Document scan start position	0 - 99	50
4	RRCB	Resist roller clutch ON timing adjustment value		
10	SIDE2 ADJ.	Correction value for RRCB when refereeing from ADU	1 - 99	50
(Image loss set value)				
5	LEAD	Lead edge image loss set value	0 - 99	15
6	SIDE	Side image loss set value		20
(Void set value)				
7	LEAD_EDGE (DENA)	Lead edge void set value	0 - 99	35
8	TRAIL_EDGE (DENB)	Rear edge void adjustment value		
9	FRONT/REAR	Front/Rear void adjustment value		32

NOTE: When [P] is pressed after entering an adjustment value, the adjustment value is set. When [START] key is pressed instead, the adjustment value is set and copying is performed.)

Normal display		NOW COPYING.
ERROR display	Door open	DOOR OPEN.
	Jam	JAM
	Paper empty	PAPER EMPTY.

(Copy condition in this simulation)

∗ To select paper (paper feed tray), perform the following procedures.

1) Enter 0 with 10-key.
2) Press [START] key. (The mode is changed to the paper feed tray selection mode.)
3) Enter the number corresponding to the paper feed tray of the target paper with 10-key.
4) Press [START] key. (The paper feed tray is selected.)

1	TRAY1	TRAY1
2	TRAY2	TRAY2
3	TRAY3	TRAY3
4	TRAY4	TRAY4
5	BPT	Manual feed

∗ To set the magnification ratio, perform the following procedure.

1) Enter 2 with 10-key.
2) Press [START] key.
3) Enter the copy magnification ratio with 10-key.
4) Press [START] key.

Set range	25 - 400 (%)

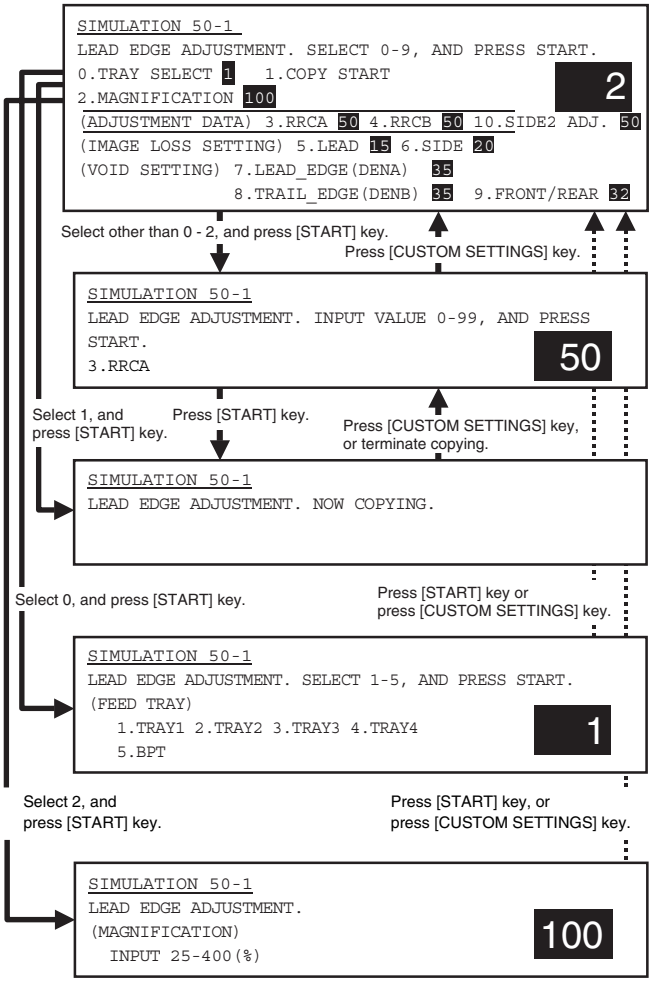

50-2

Purpose	Adjustment
Function (Purpose)	Used to adjust the document scan position, the image print position, and the void area (image loss). (Simple adjustment) (This adjustment is the simple method of SIM 50-1.) (Document table mode)
Item	Picture quality Image position

Operation/Procedure

(Lead edge image loss/void area adjustment)

1) Set the RRGB value of SIM 50-1 to 80 - 99.
2) Set the lead edge image loss adjustment value (LEAD EDG) and the paper lead edge void adjustment value (DENA) to the values specified below.

   (Standard set value) Lead edge image loss: 1.5mm
   Paper lead edge void: 3.5mm (DENA: 35)

   ∗ Set the adjustment value of LEAD to 15. (Enter 15 as the adjustment value of LEAD and press [P] key.
   ∗ Set the adjustment value of DENA to 35. (Enter 35 as the adjustment value of DENA and press [P] key.)
3) Set the adjustment value of L1 to 0. (Enter 0 as the adjustment value of L1, and press [P] key.)
4) Set the adjustment value of L2 to 0. (Enter 0 as the adjustment value of L2, and press [P] key.)
5) Make a copy at 400%, and calculate the values of L1 and L2. (Enter 100 as the set value (MAGNIFICATION) of the copy magnification ratio, and press [START] key.) (Place a scale on the document table and make a copy.)

   L1 = Distance (mm) from the image lead edge position to the scale position of 10mm x 10

   L2 = Distance (mm) from the image lead edge position to the paper lead edge x 10
6) Enter the above values as the set values of L1 and L2. (Enter the adjustment values of L1 and L2, and press [P] key.)

If the adjustment result is not satisfactory, perform the above procedures again from the beginning, or use SIM 50-1 to adjust.

NOTE: If a satisfactory result is not obtained with the above procedures, through the adjustment values are changed individually, the normal adjustment cannot be made.

Perform procedures 3) to 6) continuously.

(Rear edge void area adjustment)

Adjust so that the rear edge void area is 3.5mm. (Change the adjustment value of TRAIL EDGE, and press [START] key.)

(Front/rear frame direction image loss adjustment)

Set the adjustment value of SIDE to 20. (Enter 20 as the adjustment value of SIDE, and press [P] key.)

When this adjustment value is changed, the image position is shifted in the front/rear frame direction.

(Front/rear frame direction void area adjustment)

Adjust so that the total of the front/rear direction void areas is 7.0mm. (Change the adjustment values of FRONT/REAR, and press [START] key.)

Front frame void area = 3.5mm Rear frame void area = 3.5mm

If, as shown above, the front and the rear void areas are not even, use SIM 50-5 to adjust the image off-center position.

	Item	Content	Set range	Default
0	TRAY SELECT	Paper feed tray selection	1 - 5	–
1	COPY START	Copy START (Default)	–	–
2	MAGNIFICATION	Print magnification ratio	25 - 400%	400
(Lead edge adjustment value)				
3	L1	Distance from the image lead edge to the scale of 10mm. (Platen 400%, 0.1mm increment)	0 - 999	–
4	L2	Distance from the paper lead edge to the image lead edge (0.1mm increment)		–
(Image loss set value)				
5	LEAD	Lead edge image loss set value	0 - 99	15
6	SIDE	Side image loss set value		20
(Void set value)				
7	LEAD_EDGE (DENA)	Lead edge void set value	0 - 99	35
8	TRAIL_EDGE (DENB)	Rear edge void adjustment value		
9	FRONT/REAR	Front/Rear void adjustment value		32

NOTE: When [P] is pressed after entering an adjustment value, the adjustment value is set. When [START] key is pressed instead, the adjustment value is set and copying is performed.)

Normal display		NOW COPYING.
ERROR display	Door open	DOOR OPEN.
	Jam	JAM
	Paper empty	PAPER EMPTY.

(Copy condition in this simulation)

∗ To select paper (paper feed tray), perform the following procedures.

1) Enter 0 with 10-key.
2) Press [START] key. (The mode is changed to the paper feed tray selection mode.)
3) Enter the number corresponding to the paper feed tray of the target paper with 10-key.
4) Press [START] key. (The paper feed tray is selected.)

1	TRAY1	TRAY1
2	TRAY2	TRAY2
3	TRAY3	TRAY3
4	TRAY4	TRAY4
5	BPT	Manual feed

∗ To set the magnification ratio, perform the following procedure.

1) Enter 2 with 10-key.
2) Press [START] key.
3) Enter the copy magnification ratio with 10-key.
4) Press [START] key.

Set range	25 - 400 (%)

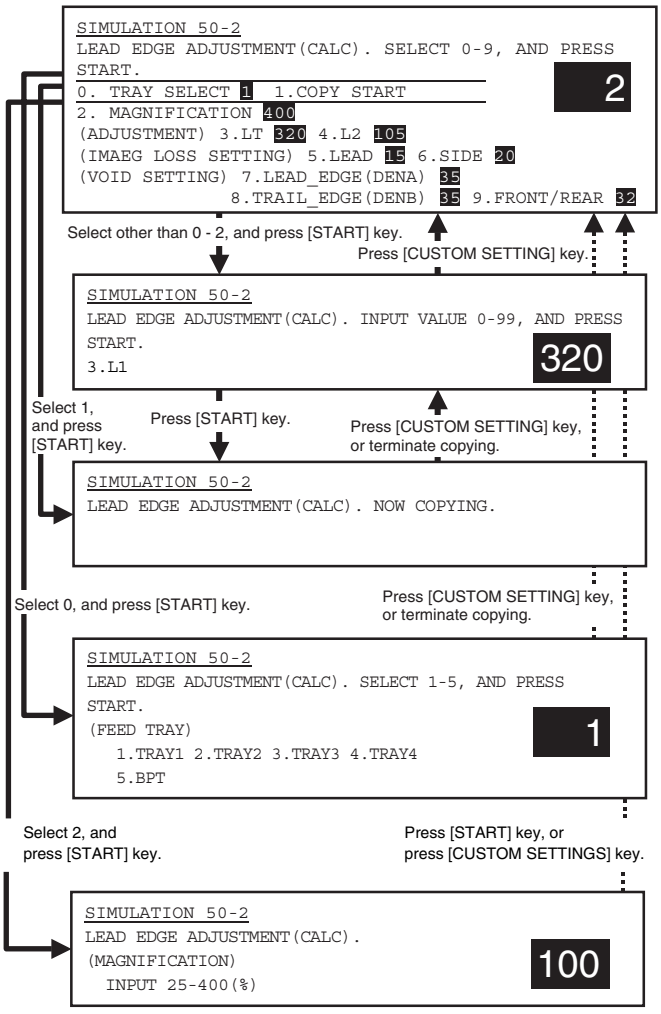

50-5

Purpose	Adjustment
Function (Purpose)	Used to adjust the print image position and the void area (image loss) on print paper. (Adjustment as the print engine) (This adjustment is reflected on all the FAX/printer/copy modes.)
Item	Picture quality

Operation/Procedure

(Print image off-center position adjustment)

1) Enter the number corresponding to the paper feed tray to be adjusted with 10-key. (Select one of 9 - 14.) (Table 1)
2) Press [START] key.
3) Enter the adjustment value with 10-key.
4) Press [P] key or [START] key. When [START] key is pressed, the adjustment value is set and printing is performed. (Table 2)

   Check the off-center of the self-print patter of print-out.

   (Shift for the adjustment value change: 0.1mm/step)

The greater the adjustment value is, the more the print image is shifted to the front.

(Lead edge void area adjustment)

1) Set the lead edge void adjustment value (DENA) as specified below.

   (Standard set value) Paper lead edge void: 3.5mm (DENA: 35)

   ∗ Set the adjustment value of DENA to 35. Enter 35 as the adjustment value of DENA, and press [P] key.

2) Check the lead edge void area on the self print pattern.
   (Enter 1 and press [START] key.)
3) If the adjustment result is not satisfactory, perform the following procedures.
   ∗ If the lead edge void area is not 3.5mm:
     Change the adjustment value of RRCB and perform the adjustment. (Change the adjustment value of RRCB and press [START] key.)
     (Shift for the adjustment value change: 0.1mm/step)

(Front/rear frame direction void area adjustment)

Adjust so that the total of the front/rear direction void areas is 7.0mm. (Change the adjustment values of FRONT/REAR, and press [START] key.)

Front frame void area = 3.5mm Rear frame void area = 3.5mm

(Paper resist adjustment)

1) Enter the number corresponding to the paper feed tray to be adjusted with 10-key. (Select one of 3 - 9.) (Table 1)
2) Press [START] key.
3) Enter the adjustment value with 10-key.
4) Press [P] key or [START] key. When [START] key is pressed, the adjustment value is set and printing is performed. (Table 2)

If the relative positions of paper and print images vary or a paper jam occurs, change the adjustment value.

(Print condition setting in this simulation)

∗ To select paper (paper feed tray), perform the following procedures.

1) Enter 0 with 10-key.
2) Press [START] key. (The mode is changed to the paper feed tray selection mode.)
3) Enter the number corresponding to the paper feed tray to be used with 10-key. (Select one of 1 - 5.) (Table 3)
4) Press [START] key. (The paper feed tray is selected.)

When the total of the above set value (1 - 5) and 10 is entered, the mode is changed to the duplex print mode.

NOTE: When [P] key is pressed after entering the adjustment value in this simulation, the adjustment value is set. When [START] key is pressed instead, the adjustment value is set and copying is performed.

(Table 1)

Item			Set range	Default AR-M351U/M355U	Default AR-M451U/M455U
0	TRAY SELECT	Paper feed tray selection	1 - 5	–	
1	PRINT START	Print start (Default)	–	–	
(Lead edge adjustment value)					
2	RRCB	Resist roller clutch ON timing adjustment value	0 - 99	50	
3	SIDE2 ADJ.	Correction value for RRCB when refereeing from ADU		50	
(Resist adjustment value)					
4	T1	Tray 1 adjustment	0 - 99	65	60
5	T2	Tray 2 adjustment		55	50
6	DESK	Tray 4 adjustment		55	50
7	BPT	Manual feed tray adjustment		60	55
8	ADU	Adjustment when paper is fed again from ADU		55	50
(Off-center set value) Self print					
9	T1	Tray 1 adjustment	0 - 99	50	
10	T2	Tray 2 adjustment			
11	T3	Tray 3 adjustment			
12	T4	Tray 4 adjustment			
13	BPT	Manual feed tray adjustment			
14	ADU	Adjustment when paper is fed again from ADU			
(Void set value)					
15	LEAD_EDGE (DENA)	Lead edge void set value	0 - 99	35	
16	TRAIL_EDGE (DENB)	Rear edge void adjustment value			
17	FRONT/REAR	Front/Rear void adjustment value		32	

(Table 2)

Normal display		NOW PRINTING.
ERROR display	Door open	DOOR OPEN.
	Jam	JAM
	Paper empty	PAPER EMPTY.

(Table 3)

1	TRAY1	TRAY1
2	TRAY2	TRAY2
3	TRAY3	TRAY3
4	TRAY4	TRAY4
5	BPT	Manual feed

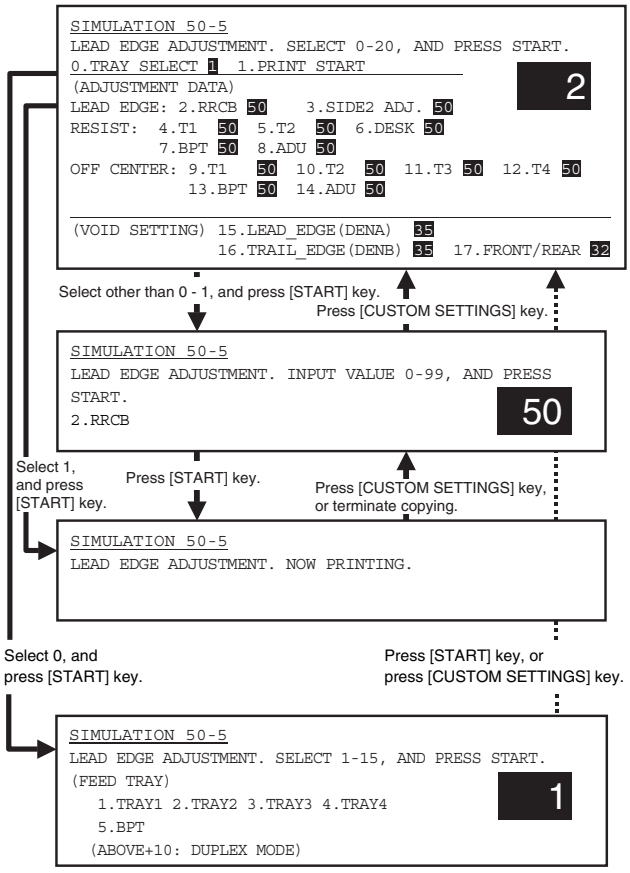

50-6

Purpose	Adjustment
Function (Purpose)	Used to adjust the copy image position and void area (image loss) on print paper in the copy mode. (The similar adjustment can be performed with SIM 50-7 (simple method).) (SPF mode)
Item	Picture quality

Operation/Procedure

(Lead edge image loss adjustment) (Table 1)

1) Set the front and back surface image loss adjustment values (LEAD EDGE) as specified below:

   (Standard set value) Lead edge image loss: 1.5mm (LEAD: 1.5)Paper lead edge: 3.5mm (DENA: 35)

   ∗ Set the adjustment value of LEAD to 15. (Enter 15 as the adjustment value of LEAD EDGE, and press [P] key.)

2) Make a duplex copy at 100% with the SPF, and check that the lead edge (image loss) is 1.5mm either on the front surface and the back surface. (Select the duplex mode in the paper selection mode of SIM 50-6.) (Table 3) (Enter 100 as the copy magnification ratio set value (MAGNIFICATION), and press [START] key.)

If the adjustment result is not satisfactory, perform the following procedures:

3) Change the adjustment values of SIDE1 and SIDE2, and perform the adjustment. (Change the adjustment values of SIDE1 and SIDE2, and press [START] key.)

   SIDE1: SPF front surface document lead edge scan position adjustment value

   SIDE2: SPF back surface document lead edge scan position adjustment value

   (Shift for the adjustment value change: 0.1mm/step)

   (The image scan start timing is determined with the detection timing of the document lead edge by the detector SPPD.)

Repeat procedures 2) and 3) until a satisfactory result is obtained.

(Rear edge image loss adjustment)

1) Use the SPF at 100% to make a duplex copy, and check that the rear edge image loss is 1.5mm on the front and the back surfaces. (Select the duplex mode in the paper selection mode of SIM 50-6.) (Enter 100 as the copy magnification ratio set value (MAGNIFICATION), and press [START] key.)

If the adjustment value is not satisfactory, perform the following procedure.

2) Change the adjustment value of TRAIL EDGE. Change the adjustment value of TRAIL EDGE, and press [START] key.

Repeat the above procedures until a satisfactory result is obtained.

(Front/rear frame direction image loss adjustment)

Set the adjustment value of the front surface and the back surface (FRONT/REAR) to 20. (Enter 20 as the adjustment value of FRONT/REAR, and press [P] key.)

When the adjustment value is changed, the image position is shifted in the front/rear frame direction.

NOTE: When [P] key is pressed after entering the adjustment value, the adjustment value is set. When [START] key is pressed instead, the adjustment value is set and copying is performed. (Table 2)

(Copy condition setting in this simulation)

∗ To select paper (paper feed tray), perform the following procedures.

1) Enter 0 with 10-key.
2) Press [START] key. (The mode is changed to the paper feed tray selection mode.)
3) Enter the number corresponding to the paper feed tray to be used with 10-key. (Table 3)
4) Press [START] key. (The paper feed tray is selected.)

∗ To set the copy magnification ratio, perform the following procedure.

1) Enter 2 with 10-key.
2) Press [START] key.
3) Enter the copy magnification ratio with 10-key.
4) Press [START] key.

Set range	25 - 200 (%)

(Table 1)

Item			Set range	Default
0	TRAY SELECT	Paper feed tray selection	1 - 5	–
1	COPY START	Copy START (Default)	–	–
2	MAGNIFICATION	Print magnification ratio	25 - 200%	–
(Lead edge adjustment value)				
3	SIDE1	Front surface document scan start position adjustment value	0 - 99	50
4	SIDE2	Back surface document scan start position adjustment value		
(Image loss set value: SIDE 1)				
5	LEAD_EDGE	Front surface lead edge image loss set value	0 - 99	15
6	FRONT_REAR	Front surface side edge image loss set value		20
7	TRAIL_EDGE	Front surface rear edge image loss set value	0 - 20	0
(Image loss set value: SIDE 2)				
8	LEAD_EDGE	Back surface lead edge image loss set value	0 - 99	15
9	FRONT/REAR	Back surface side edge image loss set value		20
10	TRAIL_EDGE	Back surface rear edge image loss set value	0 - 20	0

(Table 2)

Normal display		NOW COPYING.
ERROR display	Door open	DOOR OPEN.
	Jam	JAM
	Paper empty	PAPER EMPTY.

(Table 3)

1	TRAY1	TRAY1
2	TRAY2	TRAY2
3	TRAY3	TRAY3
4	TRAY4	TRAY4
5	BPT	Manual feed

When the total of the above set value and 10 is entered, the mode is changed to the duplex mode (DD), and a duplex copy is made.

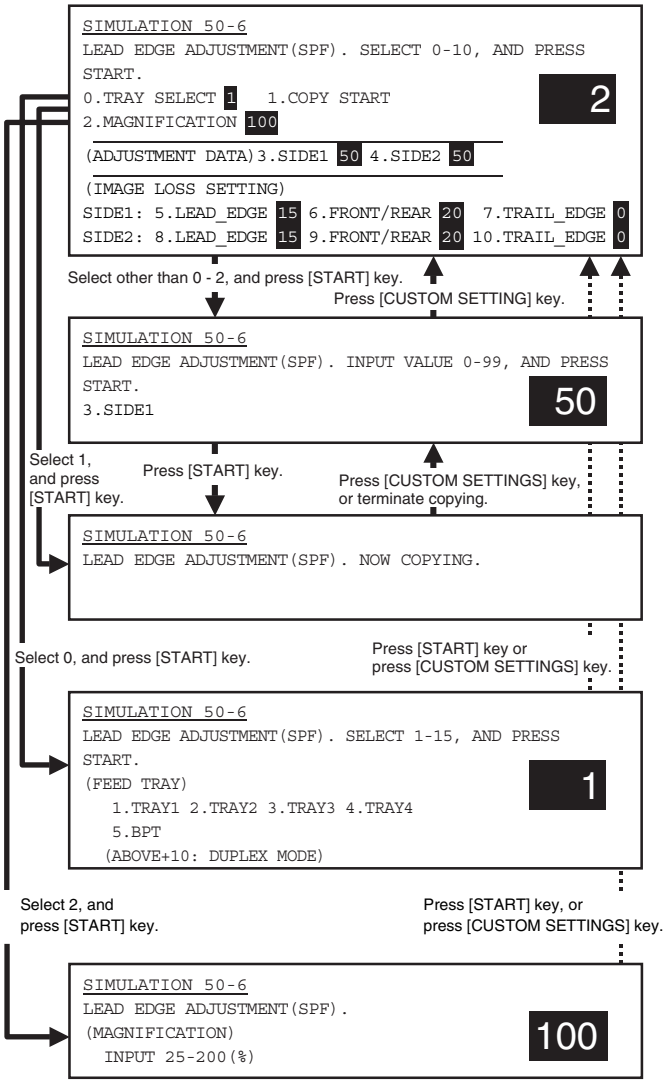

50-7

Purpose	Adjustment
Function (Purpose)	Used to adjust the copy image position and void area (image loss) on print paper in the copy mode. (The similar adjustment can be performed with SIM 50-6.) (SPF mode)
Item	Picture quality

Operation/Procedure

(Lead edge image loss adjustment)

1) Set the front and back surface image loss adjustment values (LEAD EDGE) as specified below:

   (Standard set value) Lead edge image loss: 1.5mm (LEAD: 1.5)Paper lead edge void: 3.5mm (DENA: 35)

   ∗ Set the adjustment value of LEAD to 15. (Enter 15 as the adjustment value of LEAD EDGE, and press [P] key.)

2) Set the adjustment value of L4 to 0. (Enter 0 as the adjustment value of L4, and press [P] key.

3) Set the adjustment value of L5 to 0. (Enter 0 as the adjustment value of L5, and press [P] key.

4) Make a copy at 200% with the SPF, and calculate the values of L4 and L5. (Enter 200 as the set value of the copy magnification ratio set value (MAGNIFICATION) and press [START] key.)

   L4 = Distance (mm) from the image lead edge position to the scale of 10mm x 10

   L5 = Distance (mm) from the image lead edge position to the paper lead edge x 10

5) Enter the above values as the set values of L4 and L5. (Enter the adjustment values of L4 and L5, and press [P] key.)

   (The image scan start timing is determined with the detection timing of the document lead edge by the detector SPPD.)

If the adjustment result is not satisfactory, perform the above procedures again or adjust with SIM 50-1.

NOTE: If the adjustment result of the above procedures is not satisfactory, though the adjustment value is changed individually, the adjustment cannot be completed normally.

Repeat procedures 2) - 6) until a satisfactory result is obtained.

(Rear edge image loss adjustment)

Adjust so that the rear edge image loss is 3.5mm. (Change the adjustment value of TRAIL EDGE, and press [START] key.)

(Front/rear frame direction image loss adjustment)

Set the adjustment value of SIDE to 20. (Enter 20 as the adjustment value of SIDE, and press [P] key.)

When the adjustment value is changed, the image position is shifted in the front/rear frame direction.

NOTE: When [P] key is pressed after entering the adjustment value, the adjustment value is set. When [START] key is pressed instead, the adjustment value is set and copying is performed. (Table 2)

(Copy condition setting in this simulation)

∗ To select paper (paper feed tray), perform the following procedures.

1) Enter 0 with 10-key.
2) Press [START] key. (The mode is changed to the paper feed tray selection mode.)
3) Enter the number corresponding to the paper feed tray to be used with 10-key. (Table 3)
4) Press [START] key. (The paper feed tray is selected.)

∗ To set the copy magnification ratio, perform the following procedure.

1) Enter 2 with 10-key.
2) Press [START] key.
3) Enter the copy magnification ratio with 10-key.

4) Press [START] key.

Set range	25 - 200 (%)

(Table 1)

Item			Set range	Default
0	TRAY SELECT	Paper feed tray selection	1 - 5	–
1	COPY START	Copy START (Default)	–	–
2	MAGNIFICATION	Print magnification ratio	25 - 200%	–
(Lead edge adjustment value)				
3	L4	Distance from the front surface image lead edge to the scale of 10mm (SPF: 200%)	0 - 999	–
4	L5	Distance from the back surface image lead edge to the scale of 10mm (SPF: 200%)		–
(Image loss set value: SIDE 1)				
5	LEAD_EDGE	Front surface lead edge image loss set value	0 - 99	15
6	FRONT_REAR	Front surface side edge image loss set value		20
7	TRAIL_EDGE	Front surface rear edge image loss set value	0 - 20	0
(Image loss set value: SIDE 2)				
8	LEAD_EDGE	Back surface lead edge image loss set value	0 - 99	15
9	FRONT/REAR	Back surface side edge image loss set value		20
10	TRAIL_EDGE	Back surface rear edge image loss set value	0 - 20	0

(Table 2)

Normal display		NOW COPYING.
ERROR display	Door open	DOOR OPEN.
	Jam	JAM
	Paper empty	PAPER EMPTY.

(Table 3)

1	TRAY1	TRAY1
2	TRAY2	TRAY2
3	TRAY3	TRAY3
4	TRAY4	TRAY4
5	BPT	Manual feed

When the total of the above set value and 10 is entered, the mode is changed to the duplex mode (DD), and a duplex copy is made.

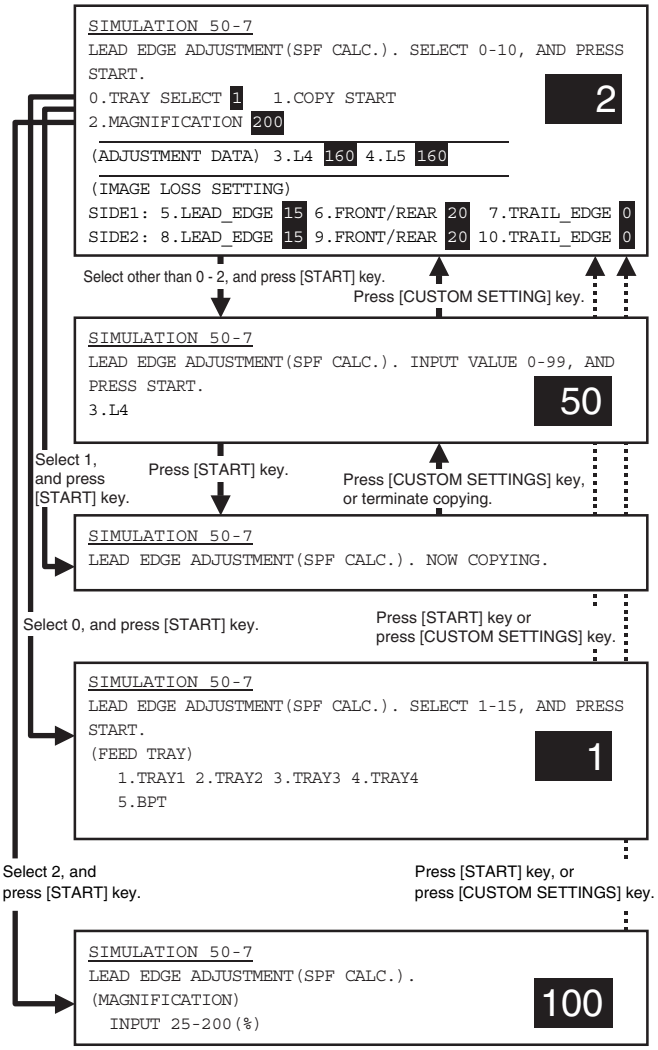

50-10

Purpose	Adjustment	
Function (Purpose)	Used to adjust the print image off-center position. (Adjusted separately for each paper feed section.)	
Item	Picture quality	Image position

Operation/Procedure

(Print image off-center position adjustment)

NOTE: This simulation cannot provide an accurate adjustment. Do not use.

1) Enter the number corresponding to the number of the paper feed tray to be adjusted with 10-key. (Select one of 3 - 9.)

Item			Set range	Default
0	TRAY SELECT	Paper feed tray selection	1 - 5	–
1	COPY START	Copy START (Default)	–	–
2	MAGNIFICATION	Print magnification ratio	25 - 400%	100
(Off-center adjustment value)				
3	TRAY1	Tray 1 adjustment	0 - 99	50
4	TRAY2	Tray 2 adjustment		
5	TRAY3	Tray 3 adjustment		
6	TRAY4	Tray 4 adjustment		
7	BPT	Manual feed tray adjustment		
8	ADU	Adjustment when paper is fed again from ADU		

2) Press [START] key.
3) Enter the adjustment value with 10-key.
4) Press [P] key or [START] key. When [START] key is pressed, the adjustment value set and copying is performed.

Normal display		NOW COPYING.
ERROR display	Door open	DOOR OPEN.
	Jam	JAM
	Paper empty	PAPER EMPTY.

(Image off-center adjustment)

1) Enter 1 with 10-key.
2) Press [START] key. The adjustment pattern is printed.
3) Check the off-center of the printed image.
(UNIT: 0.1mm/step When the adjustment value is increased, the print image is shifted to the front direction.)

NOTE: This adjustment can be performed with SIM 50-5.

(Copy condition setting in this simulation)

∗ To select paper (paper feed tray), perform the following procedures.

1) Enter 0 with 10-key.
2) Press [START] key. (The mode is changed to the paper feed tray selection mode.)
3) Enter the number corresponding to the paper feed tray to be used with 10-key. (Select one of 1 - 5)
4) Press [START] key. (The paper feed tray is selected.)

1	TRAY1	TRAY1
2	TRAY2	TRAY2
3	TRAY3	TRAY3
4	TRAY4	TRAY4
5	BPT	Manual feed

When the total of the above set value (1 - 5) and 10 is entered, the mode is changed to the duplex print mode.

∗ To set the copy magnification ratio, perform the following procedure.

1) Enter 2 with 10-key.
2) Press [START] key.
3) Enter the copy magnification ratio with 10-key.
4) Press [START] key.

Set range	25 - 400 (%)

NOTE: When [P] key is pressed after entering the adjustment value in this simulation, the adjustment value is set. When [START] key is pressed, the adjustment value is set and copying is performed.

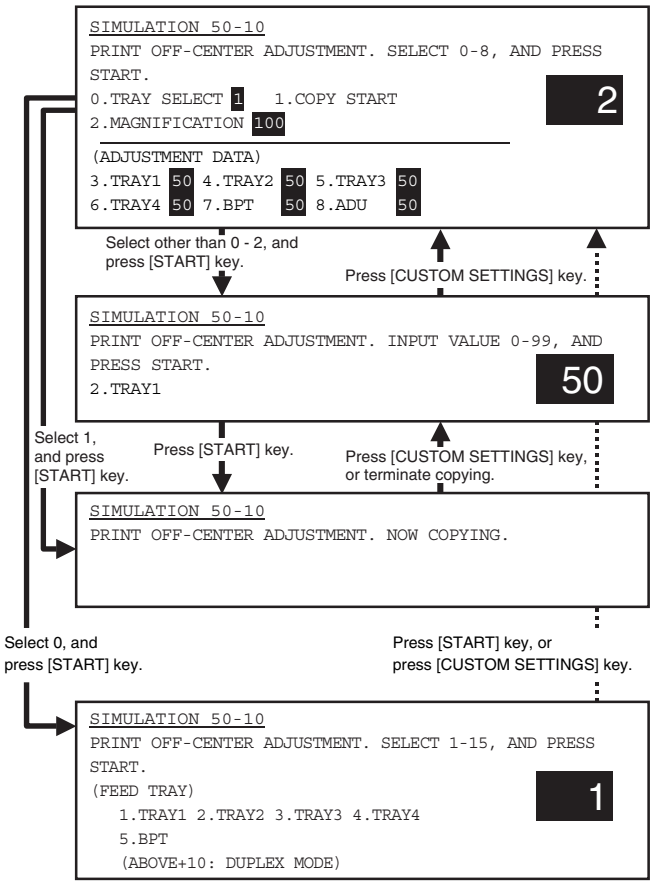

50-12

Purpose	Adjustment
Function (Purpose)	Used to adjust the scan image off-center position. (Adjusted separately for each scan mode.)
Section	
Item	Picture quality Image position

Operation/Procedure

(Select the scan mode to be adjusted.)

1) Enter the number corresponding to the scan mode to be adjusted with 10-key. (Select one of 3 - 5.)

Item			Set range	Default
0	TRAY SELECT	Paper feed tray selection	1 - 5	–
1	COPY START	Copy START (Default)	–	–
2	MAGNIFICATION	Print magnification ratio	25 - 400%	100
(Resist adjustment value)				
3	PLATEN	OC mode adjustment	0 - 99	50
4	SPF SIDE1	SPF front surface adjustment		
5	SPF SIDE2	SPF back surface adjustment		

2) Press [START] key.

(Scan off-center position adjustment)

1) Enter the scan image position adjustment value with 10-key.
2) Press [P] key or [START] key.
   When [START] key is pressed, the adjustment value is set and copying is performed.

Normal display		NOW COPYING.
ERROR display	Door open	DOOR OPEN.
	Jam	JAM
	Paper empty	PAPER EMPTY.

Check the off-center of the printed image.

Repeat the above procedures until a satisfactory result is obtained.

(UNIT: 0.1mm/step When the adjustment value is increased, the print image is shifted to the front direction.)

(Copy condition setting in this simulation)

∗ To select paper (paper feed tray), perform the following procedures.

1) Enter 0 with 10-key.
2) Press [START] key. (The mode is changed to the paper feed tray selection mode.)
3) Enter the number corresponding to the paper feed tray to be used with 10-key. (Select one of 1 - 6)
4) Press [START] key. (The paper feed tray is selected.)

1	TRAY1	TRAY1
2	TRAY2	TRAY2
3	TRAY3	TRAY3
4	TRAY4	TRAY4
5	BPT	Manual feed

When the total of the above set value (1 - 5) and 10 is entered, the mode is changed to the duplex print mode.

∗ To set the copy magnification ratio, perform the following procedure.

1) Enter 2 with 10-key.
2) Press [START] key.
3) Enter the copy magnification ratio with 10-key.
4) Press [START] key.

Set range	25 - 400 (%)

NOTE: When [P] key is pressed after entering the adjustment value in this simulation, the adjustment value is set. When [START] key is pressed, the adjustment value is set and copying is performed.

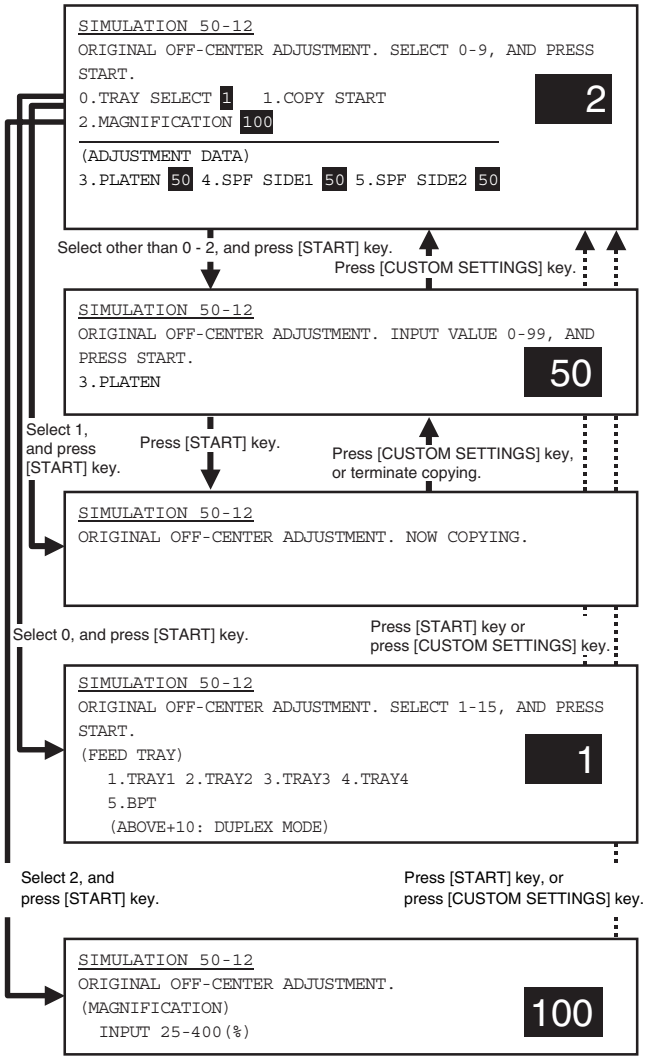

50-27

Purpose	Adjustment
Function (Purpose)	Used to adjust the image loss of the scan image in the FAX/scan mode.
Item	Picture quality

Operation/Procedure

(Select the scan mode to be adjusted.)

1) Enter the number corresponding to the adjustment item with 10-key.
2) Press [START] key.
3) Enter the adjustment value with 10-key.
4) Press [START] key.

(Shift for the adjustment value change: 1.0mm/step)

Item			Set range	Default
FAX send				
1	OC (LEAD_EDGE)	OC lead edge	0 - 10 (Unit 1mm)	3 (3mm)
2	OC (FRONT/REAR)	OC side		
3	OC (TRAIL_EDGE)	OC rear edge		
4	SPF (LEAD_EDGE)	SPF lead edge		
5	SPF (FRONT/REAR)	SPF side		
6	SPF (TRAIL_EDGE)	SPF rear edge		
7	CIS (LEAD_EDGE)	CIS lead edge		
8	CIS (FRONT/REAR)	CIS side		
9	CIS (TRAIL_EDGE)	CIS rear edge		

Item			Set range	Default
Scanner mode				
10	OC (LEAD_EDGE)	OC lead edge	0 - 10 (Unit 1mm)	0 (0mm)
11	OC (FRONT/REAR)	OC side		
12	OC (TRAIL_EDGE)	OC rear edge		
13	SPF (LEAD_EDGE)	SPF lead edge		
14	SPF (FRONT/REAR)	SPF side		
15	SPF (TRAIL_EDGE)	SPF rear edge		
16	CIS (LEAD_EDGE)	CIS lead edge		
17	CIS (FRONT/REAR)	CIS side		
18	CIS (TRAIL_EDGE)	CIS rear edge		

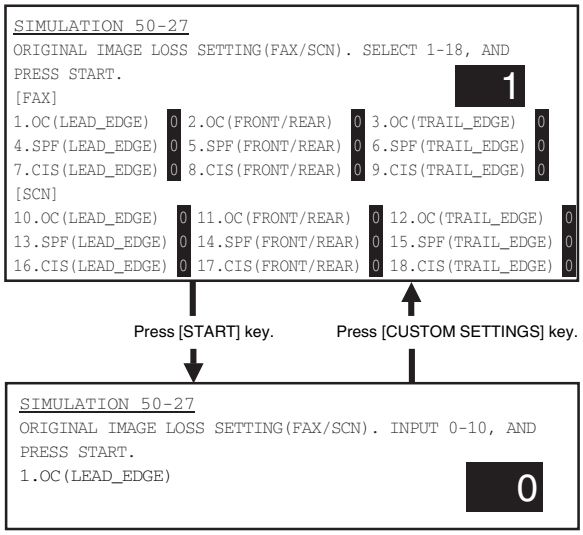

51

51-2

Purpose	Adjustment
Function (Purpose)	Used to adjust the contact pressure of paper on the resist roller of each section (each paper feed, duplex feed and SPF paper feed of the copier). (This adjustment is required when the print image position variations are considerably great or when paper jams occur frequently.)
Section	Paper transport (Discharge/Switchback/Transport)
Item	Operation

Operation/Procedure

(Select the scan mode to be adjusted.)

1) Enter the number corresponding to the paper feed tray to be adjusted with 10-key. (Select one of 2 - 12.)

Item			Set range	Default	
				AR-M351U/M355U	AR-M451U/M455U
0	TRAY SELECT	Paper feed tray selection	1 - 5	–	
1	PRINT START	Copy start (Initial value)	–	–	
2	TRAY1	Tray 1 resist adjustment value	0 - 99	65	60
3	TRAY2	Tray 2 resist adjustment value		55	50
4	DESK	Desk resist adjustment value		55	50
5	BPT	Manual tray resist adjustment value		60	55
6	ADU	ADU resist adjustment value		55	50
7	SPF (HIGH)	SPF resist adjustment value (High speed)		60	60
8	SPF (LOW)	SPF resist adjustment value (Low speed)		75	75

2) Press [START] key.

(Resist adjustment)

1) Enter the resist adjustment value with 10-key.
2) Press [START] key.
   When [START] key is pressed, the adjustment value is set and paper feed and copying are performed.

Normal display		NOW PRINTING.
ERROR display	Door open	DOOR OPEN.
	Jam	JAM
	Paper empty	PAPER EMPTY.

(Copy condition setting in this simulation)

∗ To select paper (paper feed tray), perform the following procedures.

1) Enter 0 with 10-key.
2) Press [START] key. (The mode is changed to the paper feed tray selection mode.)
3) Enter the number corresponding to the paper feed tray to be used with 10-key.
4) Press [START] key. (The paper feed tray is selected.)

1	TRAY1	TRAY1
2	TRAY2	TRAY2
3	TRAY3	TRAY3
4	TRAY4	TRAY4
5	BPT	Manual feed

When the total of the above set value (1 - 5) and 10 is entered, the mode is changed to the duplex print mode.

NOTE: When [P] key is pressed after entering the adjustment value in this simulation, the adjustment value is set. When [START] key is pressed, the adjustment value is set and copying is performed.

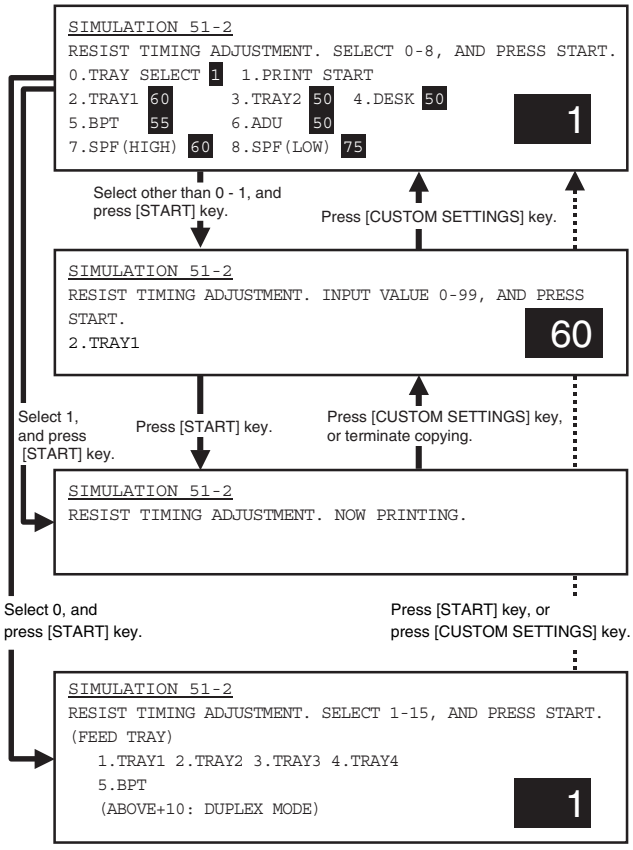

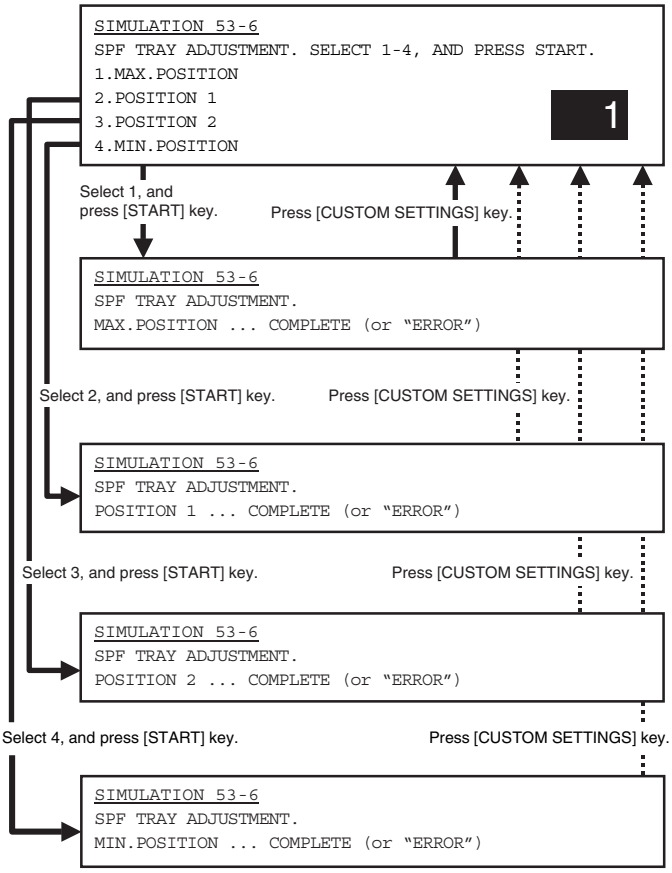

53

53-6

Purpose	Adjustment
Function (Purpose)	Used to adjust the DSPF width detection level.
Section	
Item	Operation

Operation/Procedure

1) Set the SPF paper feed guide to the max. position.
2) Select "MAX. POSITION" with 10-key.
3) Press [START] key.
   The max. width detection level is recognized.
4) Press [CSUTOM SETTING] key.
5) Set the SPF paper feed guide to A4R size position.
6) Select POSITION 1 with 10-key.
7) Press [START] key.
   The A4R width detection level is recognized.
8) Press [CSUTOM SETTING] key.
9) Set the SPF paper feed guide to A5R size position.
10) Select POSITION 2 with 10-key.
11) Press [START] key.
    The A5R width detection level is recognized.
12) Press [CSUTOM SETTING] key.
13) Set the SPF paper feed guide to the min. position.
14) Select "MIN. POSITION" with 10-key.
15) Press [START] key.
    The min. width detection level is recognized.

If the above procedures are not completed normally, ERROR is displayed. When completed normally, COMPLETE is displayed.

53-7

Purpose	Adjustment/Setup/Operation data output/Check (Display/Print)
Function (Purpose)	Used to enter the SPF width detection adjustment value.
Section	DSPF
Item	Operation

Operation/Procedure

1) Enter the number corresponding to the set item with 10-key.

Item			Set range	Default
1	MAX. POSITION	Max. width	0 - 1023	66
2	POSITION 1	Adjustment position 1		456
3	POSITION 2	Adjustment position 2		713
4	MIN. POSITION	Min. width		791

2) Press [START] key.
3) Enter the set value with 10key.
4) Press [START] key.

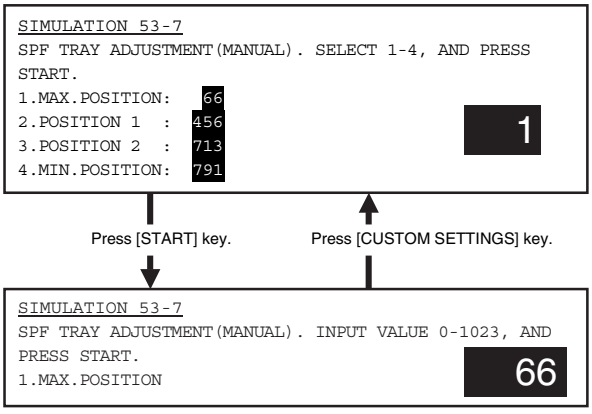

53-8

Purpose	Adjustment
Function (Purpose)	Used to adjust the document scan start position. (Used to adjust the scanner scan position in the SPF mode front scan.)

Operation/Procedure

(Automatic adjustment)

1) Select 1 or 2 with 10-key.
2) Press [START] key.

(Manual feed adjustment)

1) Enter the adjustment value with 10key.
2) Press [START] key.

When an adjustment error occurs, the trouble code (E7-17) is displayed simultaneously with "COMPLETED."

Item			Set range	Default
1	AUTO	Automatic adjustment	–	–
2	MANUAL	Manual feed adjustment (Direct entry of a number)	1 - 70 (1 count: 0.1mm)	32

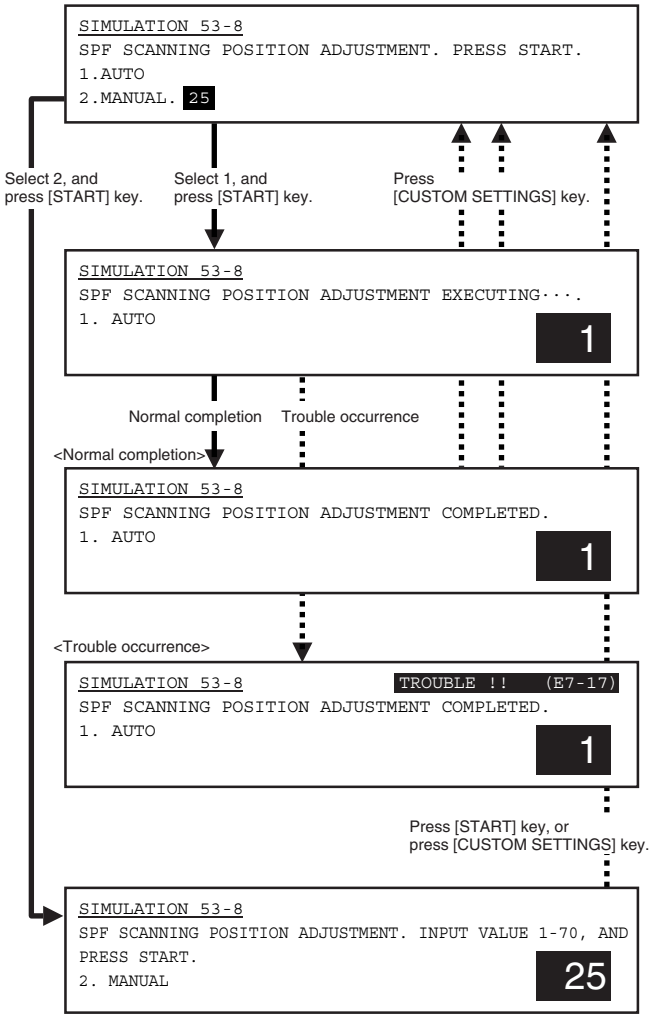

55

55-1

Purpose	Setting	
Function (Purpose)	Used to set the specifications of the engine control operations. (PCU PWB)	
Section		
Item	Operation	Specifications

Operation/Procedure

This simulation is used to change and check the engine soft SW. Set this setting to the default.

There is no need to change this setting in the market.

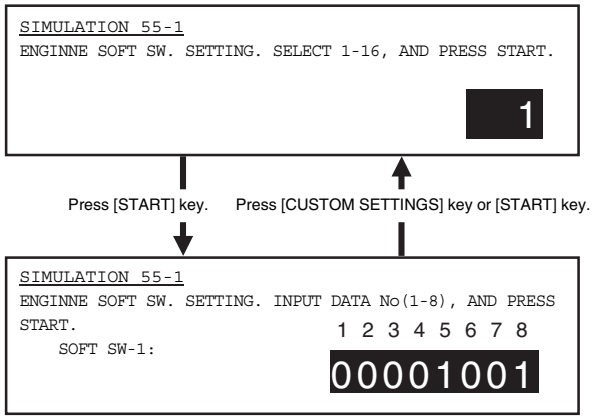

55-2

Purpose	Setting	
Function (Purpose)	Used to set the specifications of the scanner control operations. (Scanner control PWB)	
Section		
Item	Operation	Specifications

Operation/Procedure

This simulation is used to change and check the scanner soft SW. Set this setting to the default.

There is no need to change this setting in the market.

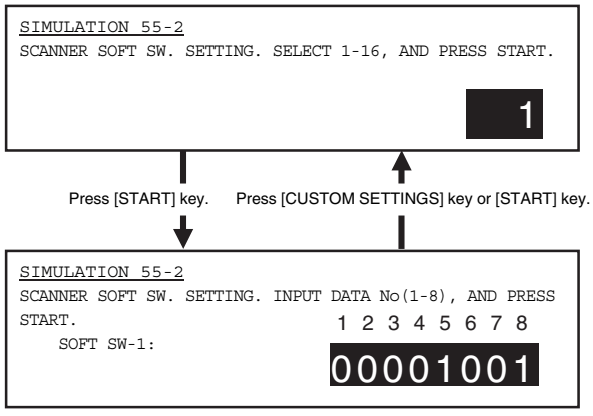

55-3

Purpose	Setting
Function (Purpose)	Used to set the specifications of the controller operations. (MFP control PWB)
Section	
Item	Operation Specifications

Operation/Procedure

This simulation is used to change and check the controller soft SW. Set this setting to the default.

There is no need to change this setting in the market.

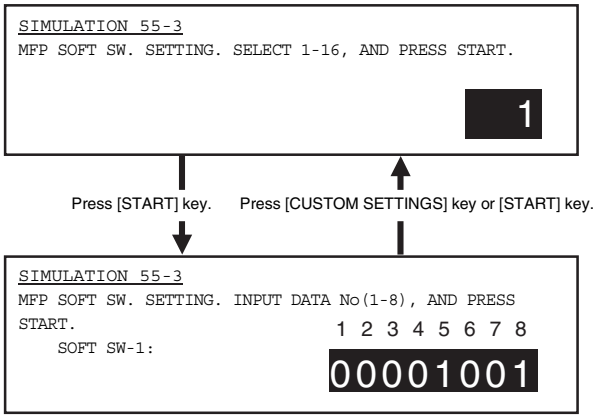

56

56-1

Purpose	Data transfer
Function (Purpose)	Used to transfer the MFP controller data. (Used to repair the PWB.)
Section	MFP controller
Item	Data transfer

Operation/Procedure

1) Select the number corresponding to the data transfer mode with 10-key.

1	ALL (EEPROM, SRAM, FlashROM) → HDD	All the contents of memory are transferred to HDD. (Similar to execution of items 3 and 5.)
2	HDD → ALL (EEPROM, SRAM, FlashROM)	The HDD contents are transferred to all the memories. (Similar to execution of items 4 and 6.)
3	EEPROM → HDD	Transfer from EEPROM to HDD
4	HDD → EEPROM	Transfer from HDD to EEPROM
5	SRAM (+ FAX Memory, + Option Memory) → HDD	Transfer from SRAM to HDD. When, however, the FAX memory or an option memory (for FAX memory) * is installed, the contents of the Fax memory are also transferred to HDD.
6	HDD → SRAM (+ FAX Memory, + Option → Memory)	Transfer from HDD to SRAM. When, however, the FAX memory or an option memory (for FAX memory) * is installed, the contents HDD are transferred to the FAX memory as well as the SRAM.
7	FontROM → HDD	Transfer from the font ROM to HDD

*: When Flash ROM or OP_Flash ROM is not installed, transfer is not made.

2) Press [START] key.

3) The confirmation menu is opened to confirm YES/NO of data transfer. Select one.

1	YES	Data transfer is executed.
2	NO	Data transfer is not executed.

4) Press [START] key.

After completion of transfer, the transfer result is displayed.

If there is no error, the machine is automatically reset after completion of data transfer.

If there is an error, "NG" is displayed. (The machine is not reset.)

When restoring from HDD, fit the configurations of the Flash ROM and the optional Flash ROM at back-up.

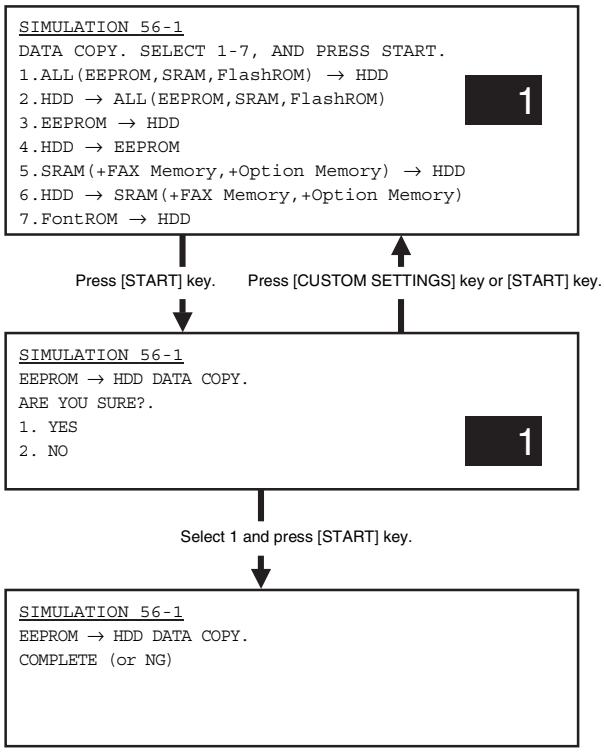

60

60-1

Purpose	Operation test/Check
Function (Purpose)	Used to check the MFP control (DRAM) operations (read/write).
Section	ICU
Item	Operation

Operation/Procedure

1) Enter the number corresponding to the memory to be checked with 10-key.

1	MFP DRAM	ERDH image memory
2	ASIC DRAM	ASIC image memory

2) Press [START] key.

The memory read/write operation is started.

After starting the operation, "NOW CHECKING" is displayed during checking. When read/write is normally completed, "OK" is displayed. If an error occurs, "NG" is displayed.

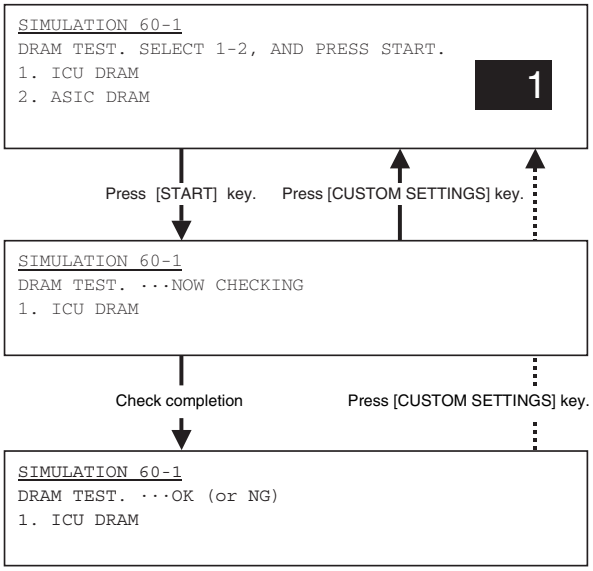

61

61-1

Purpose	Operation test/Check
Function (Purpose)	Used to check the operation of the scanner (write) unit (LSU).
Section	Scanner (write) unit (LSU)
Item	Operation

Operation/Procedure

Used to check if the LSU delivers output of the sync signal (HSYNC/) or not.

"NOW CHECKING" is displayed during checking. When the test is normally completed, "OK" is displayed. If an error occurs, "NG" is displayed.

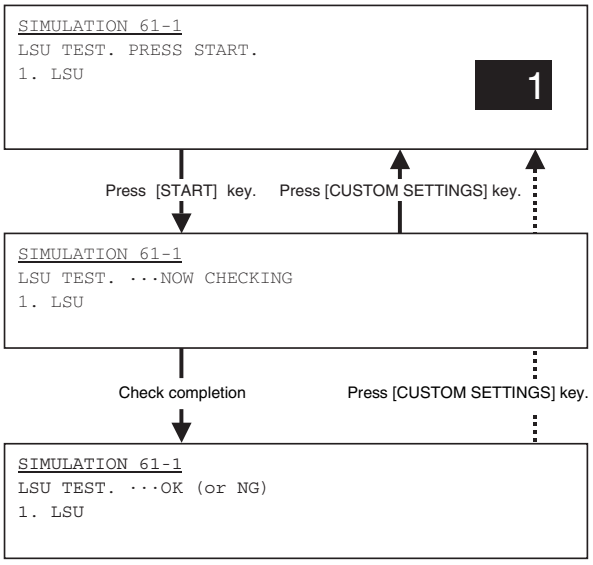

61-2

Purpose	Adjustment
Function (Purpose)	Used to adjust the laser power (absolute value) in the copy mode.
Section	Scanner (write) unit (LSU)
Item	Operation

Operation/Procedure

1) Select the number corresponding to the adjustment mode with 10-key.

Item			Set range	Default	
				AR-M351U/ M355U	AR-M451U/ M455U
1	AE	Auto exposure mode	67 - 150	76	93
2	CHARA.	Text mode			
3	MIX	Text/Photo mode			
4	PHOTO	Photo mode			

2) Press [START] key.
3) Enter the adjustment value with 10-key.
4) Enter [START] key.

NOTE: Be sure to set the default value. If not, a trouble may occur in the LSU.

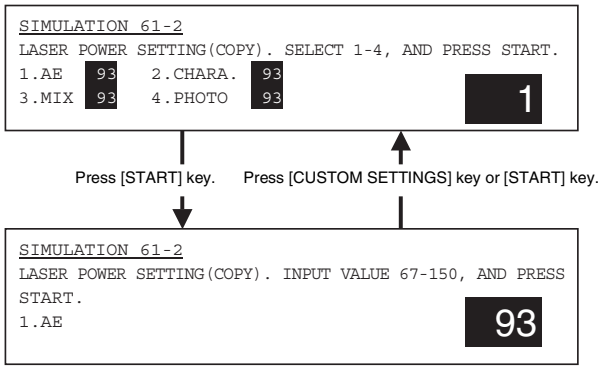

61-3

Purpose	Adjustment
Function (Purpose)	Used to adjust the laser power (absolute value) in the FAX mode.
Section	Scanner (write) unit (LSU)
Item	Operation

Operation/Procedure

1) Select the number corresponding to the adjustment mode with 10-key.
2) Press [START] key.
3) Enter the adjustment value with 10-key.

Set range	67 - 150
Default	76 (AR-M351U/M355U) 93 (AR-M451U/M455U)

4) Enter [START] key.

NOTE: Be sure to set the default value. If not, a trouble may occur in the LSU.

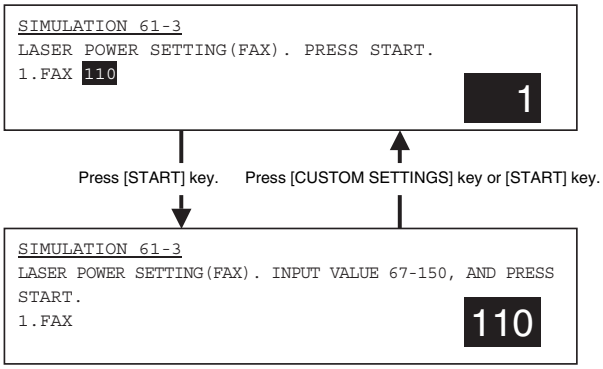

61-4

Purpose	Adjustment
Function (Purpose)	Used to adjust the laser power (absolute value) in the printer mode.
Section	Scanner (write) unit (LSU)
Item	Operation

Operation/Procedure

1) Select the number corresponding to the adjustment mode with 10-key.
2) Press [START] key.
3) Enter the adjustment value with 10-key.

Set range	67-150
Default	76 (AR-M351U/M355U) 93 (AR-M451U/M455U)

4) Enter [START] key.

NOTE: Be sure to set the default value. If not, a trouble may occur in the LSU.

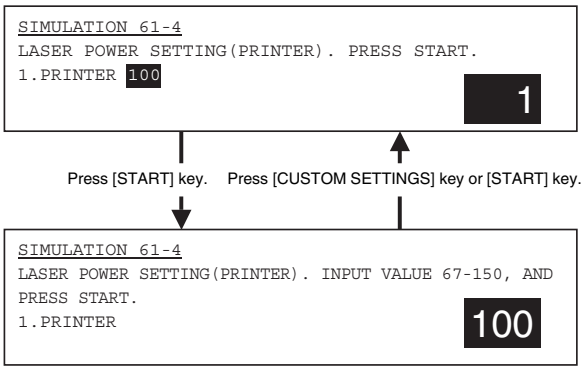

62

62-1

Purpose	Data clear
Function (Purpose)	Used to format the hard disk. (Only in the model with a disk installed)
Section	MFP controller (HDD)
Item	Clear

Operation/Procedure

1) Select YES/NO of hard disk format.

1	YES	Execution
2	NO	Cancel

2) Press [START] key.

During formatting, "EXECUTING" is displayed. When formatting is completed normally, "OK" is displayed. If not, "NG" is displayed.

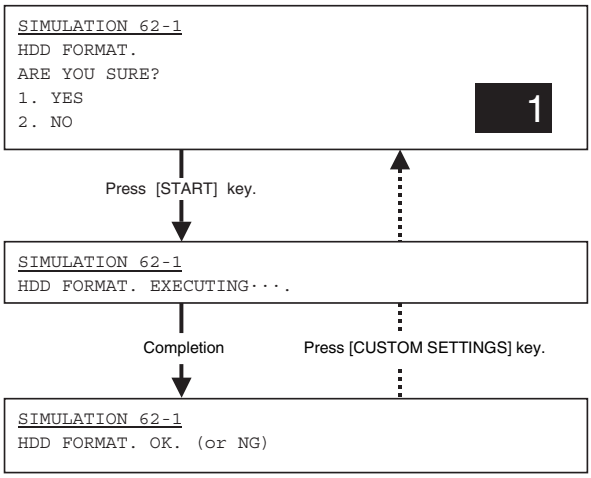

62-2

Purpose	Operation test/Check
Function (Purpose)	Used to check the operation of the hard disk (read/write). (Only in the model with a disk installed) (Partial check)
Section	MFP controller (HDD)
Item	Operation

Operation/Procedure

1) Select YES/NO of hard disk read/write check.

1	YES	Execution
2	NO	Cancel

2) Press [START] key.

During testing, "EXECUTING" is displayed. When test is completed normally, "OK" is displayed. If not, "NG" is displayed.

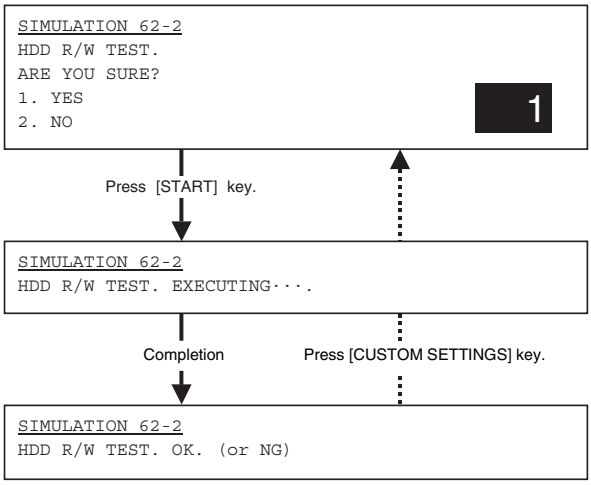

62-3

Purpose	Operation test/Check
Function (Purpose)	Used to check the operation of the hard disk (read/write). (Only in the model with a disk installed) (All areas check)
Section	MFP controller (HDD)
Item	Operation

Operation/Procedure

1) Select YES/NO of hard disk read/write check.

1	YES	Execution
2	NO	Cancel

2) Press [START] key.

During testing, "EXECUTING" is displayed. When test is completed normally, "OK" is displayed. If not, "NG" is displayed.

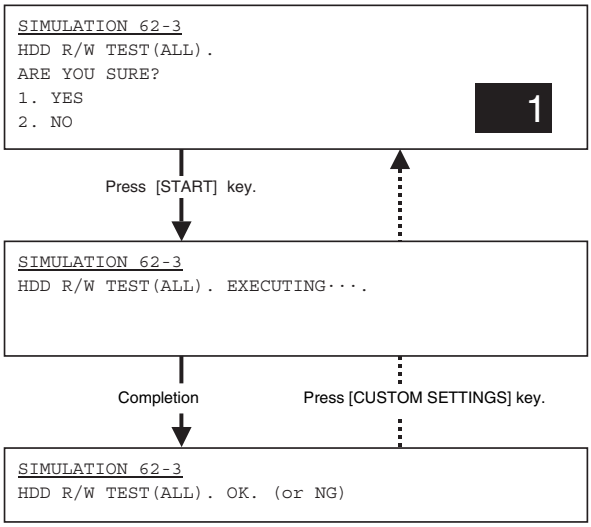

62-6

Purpose	Operation test/Check
Function (Purpose)	Used to check the operations of the hard disk. (The self diag operation of the SMART function is executed.) (Only in the model with a disk installed)
Section	MFP controller (HDD)
Item	Clear

Operation/Procedure

1) Select the number corresponding to the self diag check mode.

1	SHORT SELF-TEST	Partial test
2	EXTENDED SELF-TEST	All areas test

2) Press [START] key.

During the self diag operation, "EXECUTING" is displayed.

If the self diag is completed normally, "0" is displayed. If not, any value but 0 is displayed.

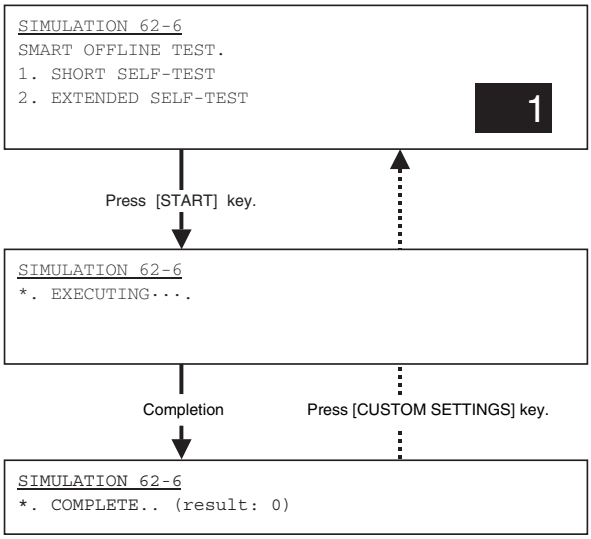

* = SHORT SELF-TEST, EXTENDED SELF-TEST

62-7

Purpose	Operation test/Check
Function (Purpose)	Used to check the operations of the hard disk. (The result of the self diag operation of the SMART function is printed out.) (Only in the model with a disk installed)
Section	MFP controller (HDD)
Item	Clear

Operation/Procedure

1) Enter 1 with 10-key.

0	TRAY SELECT	Tray select auto only (Selection inhibited)
1	PRINT START	Print start

2) Press [START] key.

The result of the hard disk operation check (the self diag operation of the SMART function) is printed out.

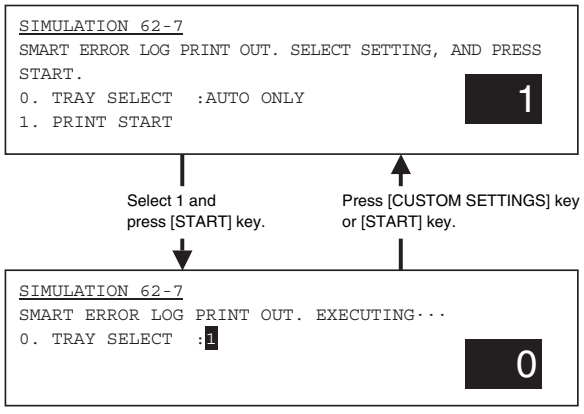

62-8

Purpose	Data clear
Function (Purpose)	Used to format the hard disk (the system area excluded). (Only in the model with a disk installed)
Section	MFP controller (HDD)
Item	Clear

Operation/Procedure

1) Select YES/NO of hard disk (the system area excluded) format.

1	YES	Execution
2	NO	Cancel

2) Press [START] key.

During formatting, "EXECUTING" is displayed. When formatting is completed normally, "OK" is displayed. If not, "NG" is displayed.

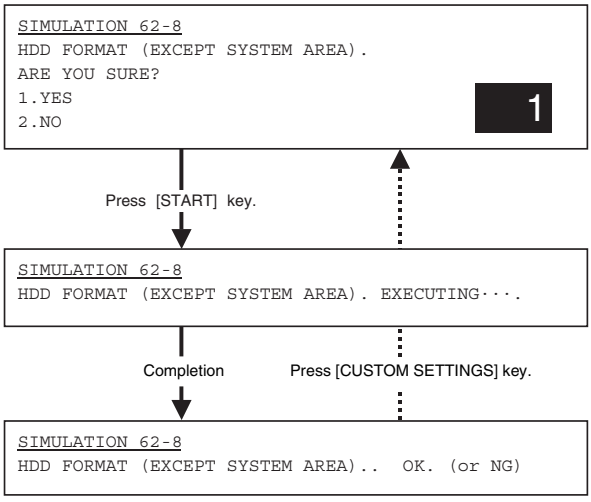

62-10

Purpose	Data clear
Function (Purpose)	Used to delete a job complete list (also to delete job log data) (Only in the model with a disk installed)
Section	MFP controller (HDD)
Item	Clear

Operation/Procedure

1) Select YES/NO of deleting the job complete list.

1	YES	Execution
2	NO	Cancel

2) Press [START] key.

During formatting, "EXECUTING" is displayed. When formatting is completed normally, "OK" is displayed. If not, "NG" is displayed.

NOTE: When executed, this function also deletes the complete queues of E-MAIL, FAX and IFAX, reservation data associated with the image send function, bulletin board data, and confidential data.

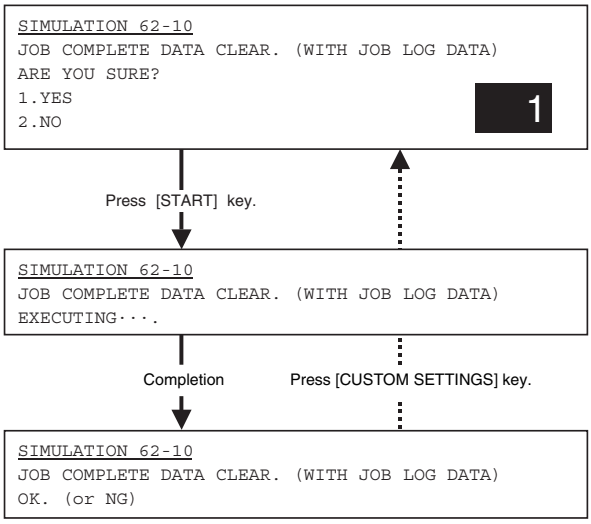

62-11

Purpose	Data clear
Function (Purpose)	Used to delete document filing data. (The management area (standard folder, user folder) is cleared.) (Only in the model with a disk installed)
Section	MFP controller (HDD)
Item	Clear

Operation/Procedure

1) Select YES/NO of deleting the document filing data.

1	YES	Execution
2	NO	Cancel

2) Press [START] key.

During formatting, "EXECUTING" is displayed. When formatting is completed normally, "OK" is displayed. If not, "NG" is displayed.

NOTE: When executed, this function internally executes the same function as SIM66-10;deleting reservation data, bulletin board data, and confidential data.

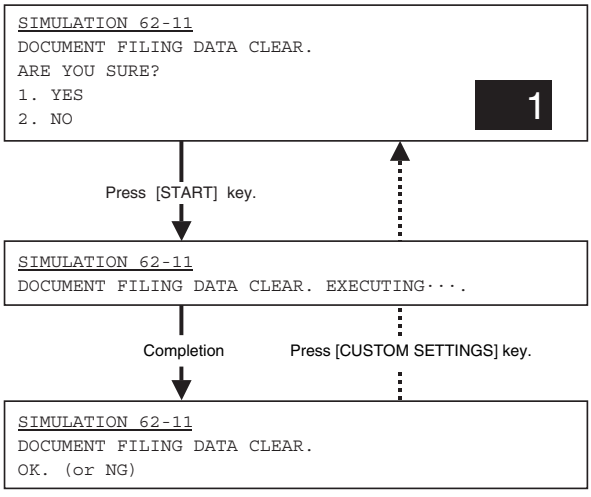

63

63-1

Purpose	Adjustment/Setup/Operation data output/Check (Display/Print)
Function (Purpose)	Used to check the result of shading correction. (The shading correction data are displayed.)
Section	Optical (Image scanning)
Item	Operation

Operation/Procedure

CCD data	
Values	Description
ODD GAIN	Od pixel gain adjustment value
EVEN GAIN	Even pixel gain adjustment value
MAX	All pixel MAX
MIN	All pixel MIN
AVE	All pixel average
OFFSET	All offset
CIS data : Only when DSPF installed	
Values	Description
GAIN	Gain adjustment value
MAX	Pixel MAX
MIN	Pixel MIN
AVE	Pixel average
OFFSET	Black offset
DEV	Standard deviation

```
SIMULATION 63-1
SHADING DATA DISPLAY.
(CCD)
ODD GAIN:  128
EVEN GAIN: 128  OFFSET: 126  MAX.: 128
MIN.:      128  AVE.:   128

(CIS)
GAIN: 128  OFFSET: 128  MAX.: 128
MIN.: 128  AVE.:   128  DEV.: 128
```

63-2

Purpose	Adjustment
Function (Purpose)	Used to execute shading.
Section	Optical (Image scanning)
Item	Operation

Operation/Procedure

1) Enter the number corresponding to the shading mode to be executed.

1	OC SHADING	OC analog level correction and shading correction (Document table mode)
2	DSPF SHADING	DSPF analog level correction and shading correction

2) Press [START] key.

During execution, "EXECUTING" is displayed. When execution is completed normally, "COMPLETED" is displayed.

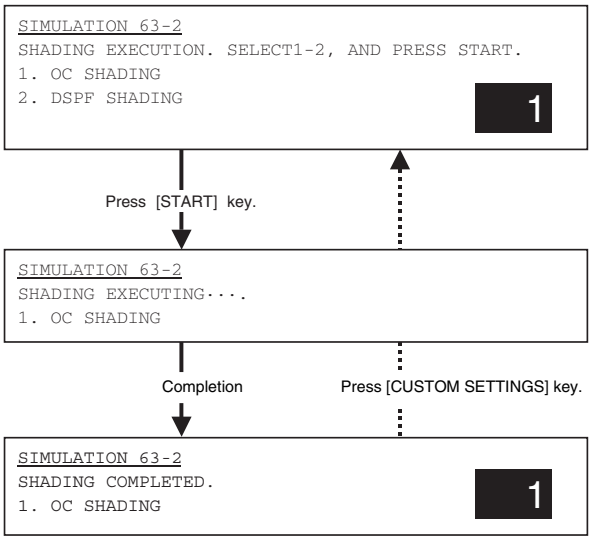

63-7

Purpose	Adjustment
Function (Purpose)	Used to adjust the white plate scan start position for shading. (Document table mode)
Section	Laser (Exposure)
Item	Operation

Operation/Procedure

1) Enter 1 with 10-key.
2) Press [START] key.
3) Enter the adjustment value with 10-key.
4) Press [START] key.

When a shading error occurs, this adjustment value is changed.

Item			Set range	Default
1	CCD	CCD scan	1 - 16	6

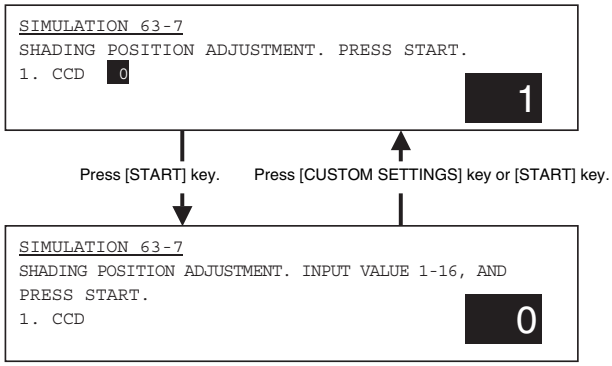

64

64-1

Purpose	Operation test/Check
Function (Purpose)	Used to check the operation of the printer section (self-print operation), (The print pattern, the paper feed mode, the print mode, the print quantity, and the density can be optionally set.)
Item	Operation

Operation/Procedure

(Various print patterns output) (Table 1)

1) Select PRINT PATTERN with 10-key.
2) Enter the number corresponding to the print pattern to be printed with 10-key.
3) Press [START] key.
4) Select PRINT START with 10-key.
5) Press [START] key.

(Print condition setting in this simulation)

∗ To select paper (paper feed tray), perform the following procedures.

1) Select TRAY SELECT with 10-key.
2) Press [START] key.
3) Enter the number corresponding to the paper feed tray of the target paper with 10-key.
4) Press [START] key. (The paper feed tray is selected.)

∗ To adjust the print density, perform the following procedures.

1) Select DENSITY with 10-key.
2) Enter the adjustment value with 10-key.
3) Press [START] key.

∗ To set the print quantity, perform the following procedures.

1) Select MULTI with 10-key.
2) Enter the print quantity with 10-key.
3) Press [START] key.

∗ To set the print quality mode, perform the following procedures.

1) Select MODE with 10-key.
2) Enter the number corresponding to the print quality mode with 10-key.
3) Press [START] key.

∗ To set the print level, perform the following procedures.

1) Select LEVEL with 10-key.
2) Enter the adjustment value with 10-key.
3) Press [START] key.

NOTE: In some print patterns, changing the level may not change the picture quality.

∗ To set duplex/simplex print, perform the following procedures.

1) Select DUPLEX with 10-key.
2) Enter the number corresponding to the operation mode with 10-key.
3) Press [START] key.

(Table 1)

0	TRAY SELECT 1. TRAY1 2. TRAY2 3. TRAY3 4. TRAY4 5. BPT	Paper feed tray 1: Tray 1 2: Tray 2 3: Tray 3 4: Tray 4 5: Manual feed
1	PRINT START	Print execution (Printing of the set data is executed.)
2	PRINT PATTERN	Print pattern (Note 1)
3	DENSITY	Graphic density (Valid only when No. 79, 80 or 84 is selected.)
4	MULTI	Print quantity
5	MODE 1. STANDARD 2. SMOOTHING 3. TONER SAVE 4. HALF TONE 5. SMOOTHING + TONER SAVE 6. SMOOTHING + HALF TONE 7. TONER SAVE + HALF TONE 8. SMOOTHING + TONER SAVE + HALF TONE	Print mode 1. Standard 2. Smoothing ON 3. Smoothing ON 3. Toner save ON 4. Half tone ON 5. Smoothing + toner save 6. Smoothing + half tone 7. Toner save + half tone 8. Smoothing + toner save + half tone
6	LEVEL	(Parameter of print image process)
7	DUPLEX 1. NO 2. YES	Duplex 0: NO (Simplex) 1: YES (Duplex)

(Note 1) Print pattern

No	Engine pattern	Controller	Pattern	Note
1	❍		For off-center adjustment	
2	❍		Main scanning direction 1 by 5	
3	❍		Main scanning direction 1mm-pitch	
4	❍		Main scanning direction 3 by 3	
5	❍		Sub scanning direction 1 by 1	
6	❍		Sub scanning direction 1 by 5	
7	❍		Sub scanning direction 2 by 4	
8	❍		Sub scanning direction 3 by 3	
9	❍		Right oblique 1 by 2	
10	❍		Right oblique 1 by 5	
11	❍		Right oblique 2 by 4	
12	❍		Right oblique 3 by 3	
13	❍		Left oblique 1 by 2	
14	❍		Left oblique 1 by 5	
15	❍		Left oblique 2 by 4	
16	❍		Left oblique 3 by 3	
17	❍		Dot 1 by 1	
18	❍		Dot 3 by 3	
19	❍		Dot	
20	❍		Solid black	
21	❍		Main scanning direction 1 by 1	
22	❍		Main scanning direction 5 by 1	
23	❍		Main scanning direction 4 by 2	
24	❍		Main scanning direction 3 by 3	
25	❍		Sub scanning direction 1 by 1	
26	❍		Sub scanning direction 5 by 1	
27	❍		Sub scanning direction 4 by 2	
28	❍		Sub scanning direction 3 by 3	
29	❍		Right oblique 2 by 1	
30	❍		Right oblique 5 by 1	
31	❍		Right oblique 4 by 2	
32	❍		Right oblique 3 by 3	
33	❍		Left oblique 2 by 1	
34	❍		Left oblique 5 by 1	
35	❍		Left oblique 4 by 2	
36	❍		Left oblique 3 by 3	

No	Engine pattern	Controller	Pattern	Note
37	❍		Dot 1 by 1	
38	❍		Dot 3 by 3	
39	❍		Dot	
40	❍		Solid white	
50		❍	All surface 1 by 1 (Vertical)	
51		❍	All surface 1 by 1 (Horizontal)	
52		❍	All surface 1 by 2 (Vertical)	
53		❍	All surface 1 by 2 (Horizontal)	
54		❍	All surface 1 by 3 (Vertical)	
55		❍	All surface 1 by 3 (Horizontal)	
56		❍	All surface 1 by 4 (Vertical)	
57		❍	All surface 1 by 4 (Horizontal)	
58		❍	All surface 1 by 5 (Vertical)	
59		❍	All surface 1 by 5 (Horizontal)	
60		❍	All surface 2 by 2 (Vertical)	
61		❍	All surface 2 by 2 (Horizontal)	
62		❍	All surface 2 by 3 (Vertical)	
63		❍	All surface 2 by 3 (Horizontal)	
64		❍	All background	
65		❍	Special pattern	
66		❑	For every other 1 block width 128 pixels/ 32 gradations	
67		❑	For every other 1 block width 128 pixels/ 16 gradations	
68		❑	For every other 1 block width 128 pixels/ 8 gradations	
69		❍	1-dot pattern	
70		❍	Print adjustment pattern with scale (Vertical)	
71		❍	Grid pattern	
72		❍	Slant line 45 degrees	
73		❍	Slant line 26.6 degrees	
74		❍	Slant line 63.4 degrees	
75		❍	ID/BG pattern	
76		❍	Dot pattern 12.5%	
77		❍	Dot pattern 28%	
78		❍	Dot pattern 50%	
79		❑	All surface effort diffusion background	
80		❍	All surface dither process background	
81		❍	For every other 1 block width 128 pixels/ 32 gradations	
82		❍	For every other 1 block width 128 pixels/ 16 gradations	
83		❍	For every other 1 block width 128 pixels/ 8 gradations	
84		❍	Memory check pattern	
85		❍	Cleaning check pattern	
86		❍	Offset check pattern	
87		❍	Text pattern A	Note *
88		❍	Text pattern B	Note *
89		❍	Text pattern C	Note *
90			Toner quantity measuring chart	
91			Radiation chart	
98			Data printing	

❑: Error diffusion process

Note*: Since the "DENSITY" of an actual copy or printer output differs, they differ from the output of self print.

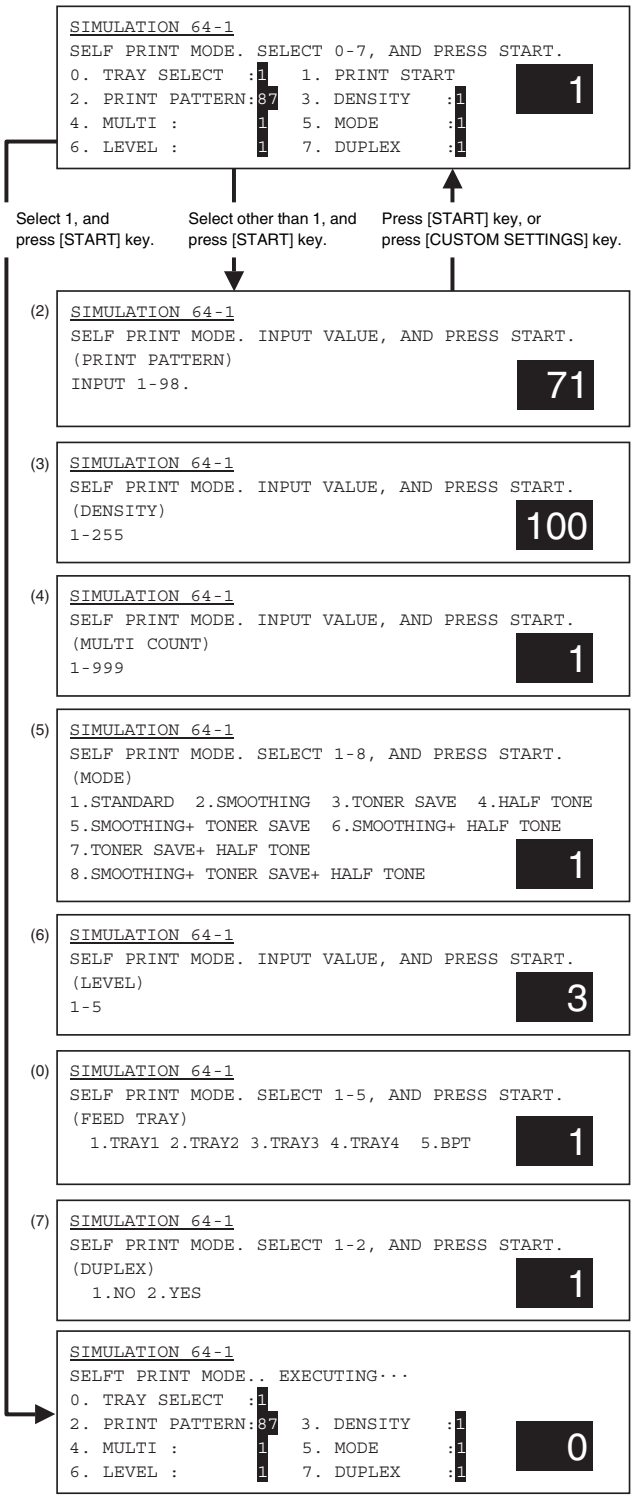

65

65-1

Purpose	Adjustment
Function (Purpose)	Used to adjust the touch panel (LCD display section) detection position.
Section	Operation (Display/Operation key)
Item	

Operation/Procedure

Touch the four cross marks (+) sequentially. The coordinates of pressed positions are set.

When the coordinates setting is completed normally, the display turns gray. When all the four points are set, the display returns to the normal state.

65-2

Purpose	Adjustment/Setup/Operation data output/Check (Display/Print)
Function (Purpose)	Used to check the result of the touch panel (LCD display) detection position adjustment. (The coordinates are displayed.)
Section	Operation (Display/Operation key)
Item	

Operation/Procedure

When the touch panel is touched, the X and Y coordinate values of the touched point and the coordinate values of the specified point are displayed. The coordinate values set with SIM 65-1 are used as the reference.

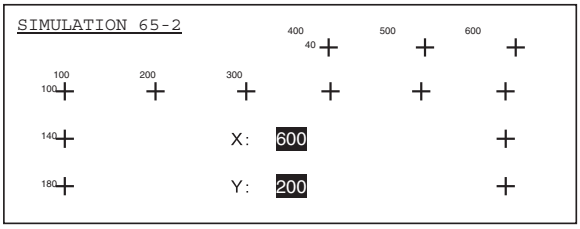

66

66-1

Purpose	Setting
Function (Purpose)	Used to change and check the FAX soft switch functions. (Used to change and check the functions provided for the FAX soft switches.) (Only when FAX is installed)
Section	FAX
Item	

Operation/Procedure

Setting of soft switches other than SW1 can be changed and checked.

1) Enter the soft switch number to be checked or changed with 10-key.

   The current set state is displayed.

2) Enter the number corresponding to the bit to be changed with 10-key.

   (Example) When the bit of 5 is to be changed, enter 5.

   The set value of 1/0 is alternatively changed every time when the target key is pressed.

3) After completion of setting of all the bits, press [START] key.

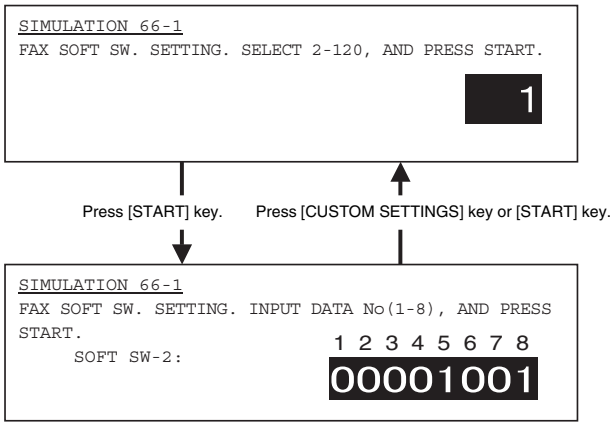

66-2

Purpose	Data clear
Function (Purpose)	Used to clear the FAX soft switch function data and to set to the default. (Excluding the adjustment values.) (Only when FAX is installed)
Section	FAX
Item	Data

Operation/Procedure

1) Set the destination code with 10-key.

Japan	0 0 0 0 0 0 0 0	Finland	0 0 1 1 1 1 0 0
U.S.A.	1 0 1 1 0 1 0 1	Norway	1 0 0 0 0 0 1 0
Australia	0 0 0 0 1 0 0 1	Denmark	0 0 1 1 0 0 0 1
U.K.	1 0 1 1 0 1 0 0	Netherlands	0 1 1 1 1 0 1 1
France	0 0 1 1 1 1 0 1	Italy	0 1 0 1 1 0 0 1
Germany	0 0 0 0 0 1 0 0	Switzerland	1 0 1 0 0 1 1 0
Sweden	1 0 1 0 0 1 0 1	Austria	0 0 0 0 1 0 1 0
Newzealand	0 1 1 1 1 1 1 0	Indonesia	0 1 0 1 0 1 0 0
China	0 0 1 0 0 1 1 0	Thailand	1 0 1 0 1 0 0 1
Singapore	1 0 0 1 1 1 0 0	Malaysia	0 1 1 0 1 1 0 0
TW	1 1 1 1 1 1 1 0	India	0 1 0 1 0 0 1 1
Other1	1 1 1 1 1 1 0 1	Philippines	1 0 0 0 1 0 0 1
Other2	1 1 1 1 1 1 0 0	Hongkong	0 1 0 1 0 0 0 0
Ohter3	1 1 1 1 1 0 1 1		

The codes other than the above are recognized as Japan.

2) Press [START] key.

3) The confirmation menu of YES/NO of clear is displayed. Select one.

1	YES	FAX soft SW is cleared.
2	NO	Not cleared.

4) Press [START] key.

The soft switch (except for the adjustment values) is cleared according to the destination selected in procedure 1).

NOTE: When the FAX BOX is not installed, initialization including the adjustment value is performed. (The adjustment value is stored in the FAX BOX.)

```
SIMULATION 66-2
FAX SOFT SW. CLEAR(WITHOUT ADJUSTMENT VALUE).
  INPUT COUNTRY CODE, AND PRESS START.
                                  1 2 3 4 5 6 7 8
                                  00000000
```

Press [START] key.

```
SIMULATION 66-2
FAX SOFT SW. CLEAR.
ARE YOU SURE?
  JAPAN                                   1
1:YES
2:NO
```

66-3

Purpose	Operation test/Check
Function (Purpose)	Used to check the operation of the FAX PWB memory (read/write). (This adjustment is required when the PWB is replaced with a new one.) (Only when FAX is installed)
Section	FAX
Item	Data

Operation/Procedure

1) Enter the number corresponding to the memory to be checked with 10-key.
2) Press [START] key.

In the case of All, all memories are checked only once.

Check connection wire list	
NO CHECK	Not checked yet.
CHECKING	Checking
OK	Check complete OK
NG	Check complete NG

The error address or the data line is displayed individually.

Target memory of check	
MFP SRAM	SRAM
MFP FLASH	FLASH ROM
MFP OP.FLASH	
MODEM EEPROM	
MODEM SRAM (G/A)	
MODEM SDRAM1	
MODEM SDRAM2	

When "repeat" is selected, the operation is repeated until the result is "NG" or [CUSTOMSETTING" is pressed.

```
SIMULATION 66-3
FAX PWB MEMORY CHECK INPUT 1-13, AND PRESS START.
1.  All Memory Device Check (once)
2.  MFP SRAM(once)          3. MFP SRAM(repeat)
4.  MFP FLASH+ OP.FLASH(once)
5.  MFP FLASH+ OP.FLASH(repeat)
6.  MODEM EEPROM(once)      7. MODEM EEPROM(repeat)
8.  MODEM SRAM(G/A)(once)   9. MODEM SRAM(G/A)(repeat)
10. MODEM SDRAM1(once)     11. MODEM SDRAM1(repeat)
12. MODEM SDRAM2(once)     13. MODEM SDRAM2(repeat)
```

Press [START] key. Press [CUSTOM SETTINGS] key.

```
SIMULATION 66-3
FAX PWB MEMORY CHECK
MFP SRAM: CHECKING
MFP FLASH: NO CHECK
MFP OP.FLASH: NO CHECK
MODEM EEPROM: NG:A0010000
MODEM SRAM(G/A):NO CHECK
MODEM SDRAM1: NG A11
MODEM SDRAM2: OK
```

When "repeat" is selected and [CUSTOM SETTINGS] key is pressed.

When Check is "once," the display stops at the result display. When [CUSTOM SETTINGS] key is pressed, the display returns to the initial display.

66-4

Purpose	Operation test/Check
Function (Purpose)	Used to check the output operation of data signals in each data output mode of FAX. (Used to check the operation of MODEM.) Send level: Max. (Only when FAX is installed)
Section	FAX
Item	Operation

Operation/Procedure

1) Enter the number corresponding to the output mode with 10-key.
2) Press [START] key.

The output is delivered at the max. send level.

1	NOSIGNAL	No signal	17	12.0 V33	12.0 V33
2	33.6 V34	26.4 V34	18	14.4 V17	14.4 V17
3	31.2 V34	31.2 V34	19	12.0 V17	12.0 V17
4	28.8 V34	28.8 V34	20	9.6 V17	9.6 V17
5	26.4 V34	26.4 V34	21	7.2 V17	7.2 V17
6	24.0 V34	24.0 V34	22	9.6 V29	9.6 V29
7	21.6 V34	21.6 V34	23	7.2 V29	7.2 V29
8	19.2 V34	19.2 V34	24	4.8 V27t	4.8 V27t
9	16.8 V34	16.8 V34	25	2.4 V27t	2.4 V27t
10	14.4 V34	14.4 V34	26	0.3 FLG	0.3 FLG
11	12.0 V34	12.0 V34	27	CED 2100	CED 2100
12	9.6 V34	9.6 V34	28	CNG 1100	CNG 1100
13	7.2 V34	7.2 V34	29	0.3 V21	0.3 V21
14	4.8 V34	4.8 V34	30	ANSam	ANSam
15	2.4 V34	2.4 V34	31	RINGER	RINGER
16	14.4 V33	14.4 V33	32	No RBT	No RBT

When [CUSTOM SETTINGS] key is pressed during execution, execution is stopped.

When a number is entered and [START] key is pressed during execution, the kind of signal can be changed.

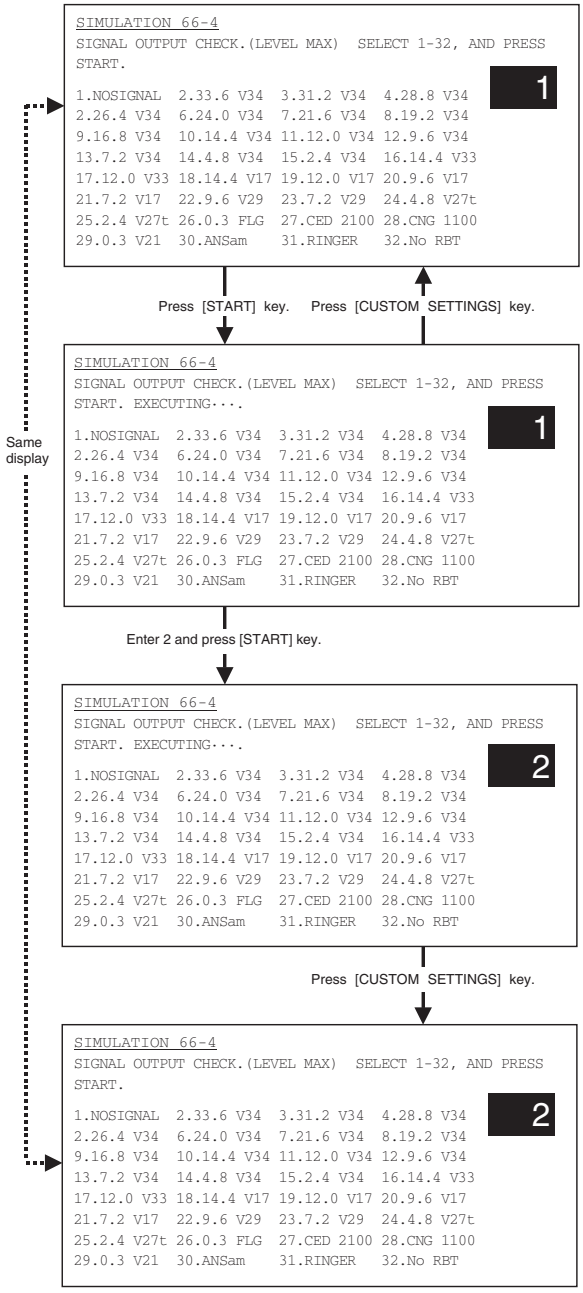

66-5

Purpose	Operation test/Check
Function (Purpose)	Used to check the output operation of data signals in each data output mode of FAX. (Used to check the operation of MODEM.) An output is sent at the send level set by the soft switch. (Only when FAX is installed)
Section	FAX
Item	Operation

Operation/Procedure

1) Enter the number corresponding to the output mode with 10-key.
2) Press [START] key.

The output is delivered at the send level set with the soft switch.

1	NOSIGNAL	No signal	17	12.0 V33	12.0 V33
2	33.6 V34	26.4 V34	18	14.4 V17	14.4 V17
3	31.2 V34	31.2 V34	19	12.0 V17	12.0 V17
4	28.8 V34	28.8 V34	20	9.6 V17	9.6 V17
5	26.4 V34	26.4 V34	21	7.2 V17	7.2 V17
6	24.0 V34	24.0 V34	22	9.6 V29	9.6 V29
7	21.6 V34	21.6 V34	23	7.2 V29	7.2 V29
8	19.2 V34	19.2 V34	24	4.8 V27t	4.8 V27t
9	16.8 V34	16.8 V34	25	2.4 V27t	2.4 V27t
10	14.4 V34	14.4 V34	26	0.3 FLG	0.3 FLG
11	12.0 V34	12.0 V34	27	CED 2100	CED 2100
12	9.6 V34	9.6 V34	28	CNG 1100	CNG 1100
13	7.2 V34	7.2 V34	29	0.3 V21	0.3 V21
14	4.8 V34	4.8 V34	30	ANSam	ANSam
15	2.4 V34	2.4 V34	31	RINGER	RINGER
16	14.4 V33	14.4 V33	32	No RBT	No RBT

When [CUSTOM SETTINGS] key is pressed during execution, execution is stopped.

When a number is entered and [START] key is pressed during execution, the kind of signal can be changed.

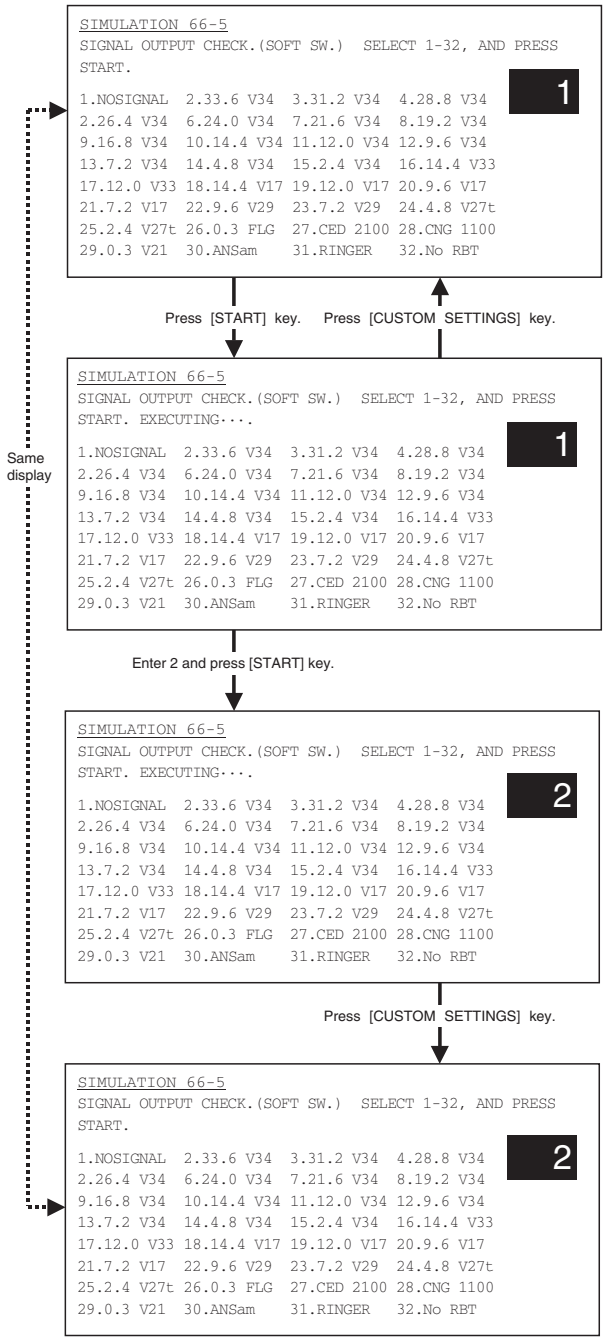

66-6

Purpose	User data output/Check (Display/Print)
Function (Purpose)	Used to print the confidential pass code. (Used when the confidential pass code is forgotten.) (Only when FAX is installed)
Section	FAX
Item	Data

Operation/Procedure

1	PRINT START	Print start

The paper is automatically selected with the size saved in the image memory.

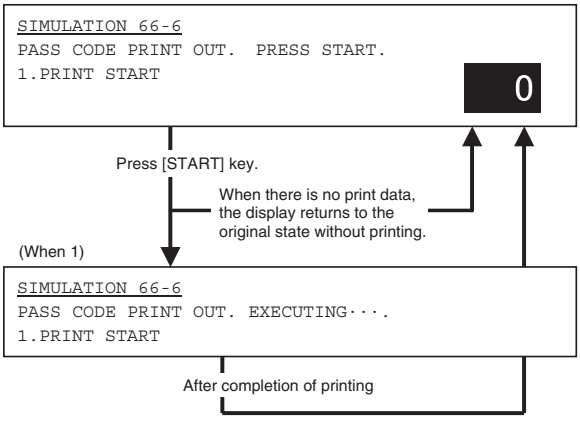

66-7

Purpose	User data output/Check (Display/Print)
Function (Purpose)	Used to print the image memory data (memory send/receive). (Only when FAX is installed)
Section	FAX
Item	Data

Operation/Procedure

All image data stored in the image memory are printed.

∗ The confidential receive data are also printed.

1	PRINT START	Print start

The paper is automatically selected with the size saved in the image memory.

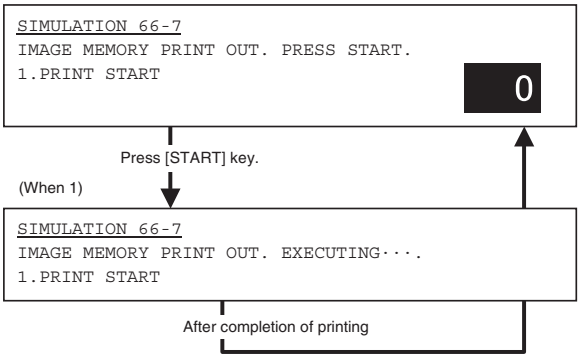

66-8

Purpose	Operation test/Check
Function (Purpose)	Used to check the output operation of various sound signals of FAX. (Used to check the operation of the sound output IC.) Send level: Max. (Only when FAX is installed)
Section	FAX
Item	Operation

Operation/Procedure

1) Enter the number corresponding to the output mode with 10-key.
2) Press [START] key.

The output is delivered at the max. level.

1	NONE	Mute	11	MESSAGE 9	Message 9
2	PAUSE	Pause sound	12	MESSAGE 10	Message 10
3	MESSAGE1	Message 1	13	MESSAGE 11	Message 11
4	MESSAGE2	Message 2	14	MESSAGE 12	Message 12
5	MESSAGE3	Message 3	15	MESSAGE 13	Message 13
6	MESSAGE4	Message 4	16	MESSAGE 14	Message 14
7	MESSAGE5	Message 5	17	MESSAGE 15	Message 15
8	MESSAGE6	Message 6	18	ALARM	Alarm
9	MESSAGE7	Message 7	19	RINGER	Call ring
10	MESSAGE8	Message 8	20	EXT.TEL.RINGER	External TEL ring

When the number is entered during execution, the kind of signal can be changed.

When [START] key is pressed, the voice message is sent. When [CUSTOM SETTINGS] key is pressed, it is stopped.

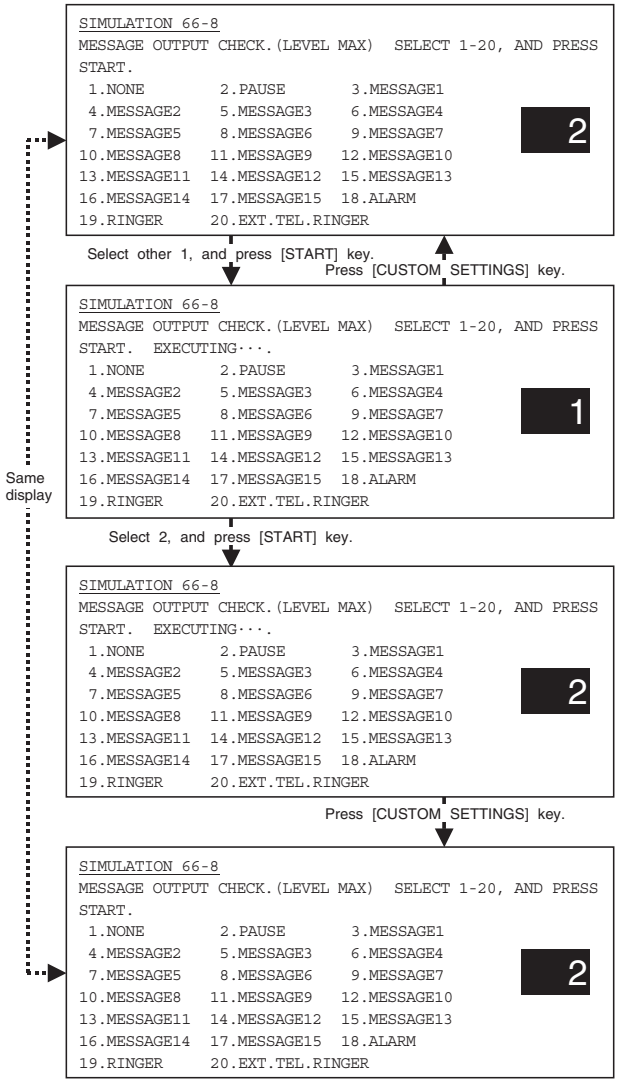

66-9

Purpose	Operation test/Check
Function (Purpose)	Used to check the output operation of various sound signals of FAX. (Used to check the operation of the sound output IC.) An output is sent at the send level set by the soft switch. (Only when FAX is installed)
Section	FAX
Item	Operation

Operation/Procedure

1) Enter the number corresponding to the output mode with 10-key.
2) Press [START] key.

The output is delivered at the send level set with the soft SW.

1	NONE	Mute	11	MESSAGE 9	MESSAGE 9
2	PAUSE	Pause sound	12	MESSAGE10	MESSAGE 10
3	MESSAGE1	MESSAGE 1	13	MESSAGE11	MESSAGE 11
4	MESSAGE2	MESSAGE 2	14	MESSAGE12	MESSAGE 12
5	MESSAGE3	MESSAGE 3	15	MESSAGE13	MESSAGE 13
6	MESSAGE4	MESSAGE 4	16	MESSAGE14	MESSAGE 14
7	MESSAGE5	MESSAGE 5	17	MESSAGE15	MESSAGE 15
8	MESSAGE6	MESSAGE 6	18	ALARM	Alarm
9	MESSAGE7	MESSAGE 7	19	RINGER	Call ring
10	MESSAGE8	MESSAGE 8	20	EXT.TEL.RINGER	External TEL ring

When the number is entered during execution, the kind of signal can be changed.

When [START] key is pressed, the voice message is sent. When [CUSTOM SETTINGS] key is pressed, it is stopped.

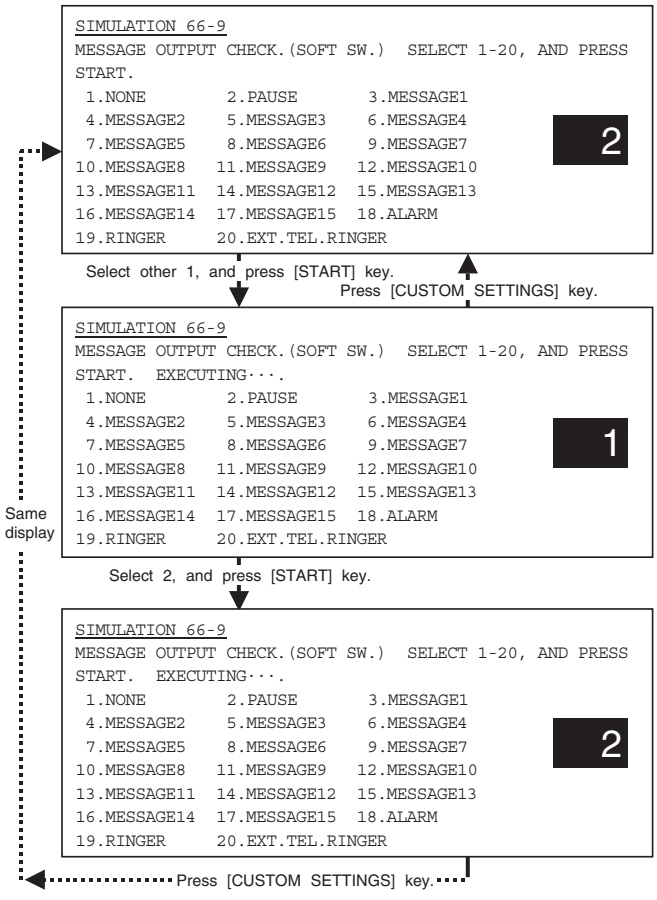

66-10

Purpose	User data output/Check (Display/Print)
Function (Purpose)	Used to clear all data of the image memory (memory send/receive). The confidential data are also cleared at the same time. (Only when FAX is installed)
Section	FAX
Item	Data

Operation/Procedure

1) Select YES/NO of image memory clear with 10-key.

1	YES	Image memory clear is executed.
2	NO	Clear is not executed.

2) Press [START] key.

The SRAM image data management table and image data in the Flash ROM area and HD (except for filing images) are cleared.

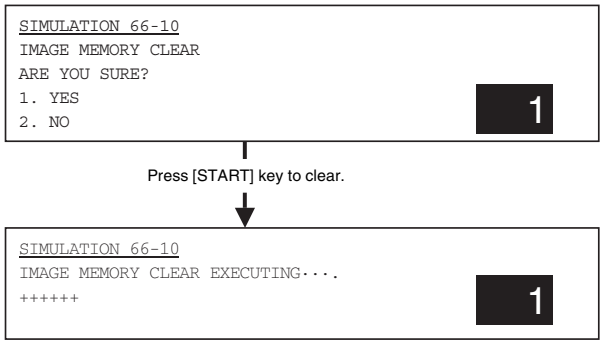

The processing status of image memory clear is displayed with "+."

66-11

Purpose	Operation test/Check
Function (Purpose)	Used to check the output operation of FAX G3 mode 300bps. (Used to check the operation of MODEM.) Send level: Max. (Only when FAX is installed)
Section	FAX
Item	Operation

Operation/Procedure

1) Select the number corresponding to the output mode with 10-key.
2) Press [START] key.

The signal is sent in the max. send level.

1	NO SIGNAL	No signal	4	00000	00000
2	11111	11111	5	010101	010101
3	11110	11110	6	00001	00001

When the number is entered during execution, the kind of signal can be changed.

When [CUSTOM SETTINGS] key is pressed during execution, the operation is stopped.

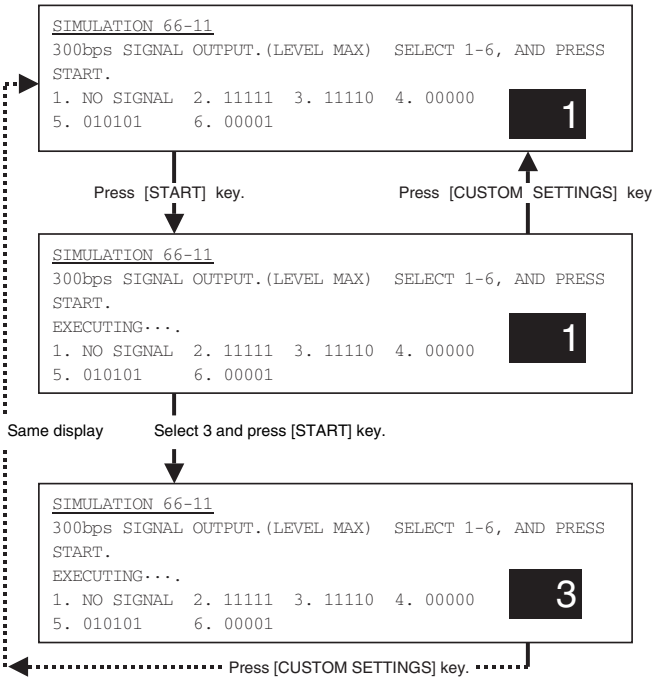

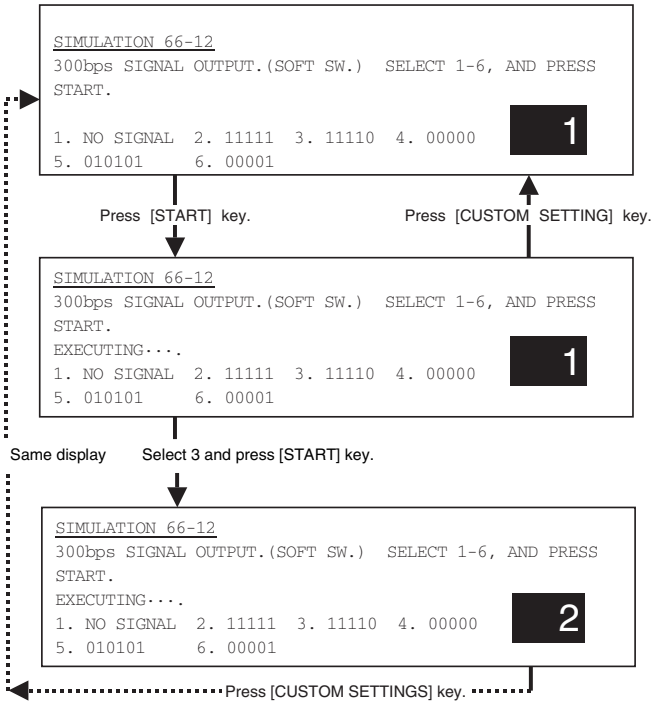

66-12

Purpose	Operation test/Check
Function (Purpose)	Used to check the output operation of FAX G3 mode 300bps. (Used to check the operation of MODEM.) An output is send at the send level set by the soft switch. (Only when FAX is installed)
Section	FAX
Item	Operation

Operation/Procedure

1) Select the number corresponding to the output mode with 10-key.
2) Press [START] key.

The signal is sent in the send level set with the soft switch.

1	NO SIGNAL	No signal	4	00000	00000
2	11111	11111	5	010101	010101
3	11110	11110	6	00001	00001

When the number is entered during execution, the kind of signal can be changed.

When [CUSTOM SETTINGS] key is pressed during execution, the operation is stopped.

66-13

Purpose	Setting
Function (Purpose)	Used to enter (set) the number of FAX dial signal output test. (The dial number set by this simulation is outputted when the dial signal output test is made by SIM 66-14 - 16.) (Only when FAX is installed)
Section	FAX
Item	Data

Operation/Procedure

1) Enter the dial number with 10-key.

   Use 10-key, [*] key, and [#] key to enter the number. The upper limit is 20 digits.

   When [CLEAR] key is pressed, the mode returns to the initial state.
2) Press [START] key.

```
SIMULATION 66-13
DIAL TEST NUMBER SETTING.      0-9:[0-9], *:[*], #:[#]
INPUT NUMBER AND PRESS START.
0123456789*#01234567
```

66-14

Purpose	Setting/Operation test/Check
Function (Purpose)	Used to set the make time in the FAX pulse dial mode (10pps) and to test the dial signal output. (The dial number signal set by SIM 66-13 is outputted.) Used to check troubles in dialing and to check the operation. (Only when FAX is installed)
Section	FAX
Item	Operation

Operation/Procedure

1) Enter 0 with 10-key.
2) Press [START] key.

The dial signal is outputted.

(Dial pulse make time setting)

1) Enter 1 with 10-key.
2) Press [START] key.
3) Enter the set value with 10-key.
4) Press [START] key.

0	EXECUTE	Execute
1	MAKE TIME	Dial pulse make time setting (0 - 15)

The dial signal is sent with the set value + 29ms.

When [CUSTOM SETTINGS] key is pressed during execution, the operation is stopped.

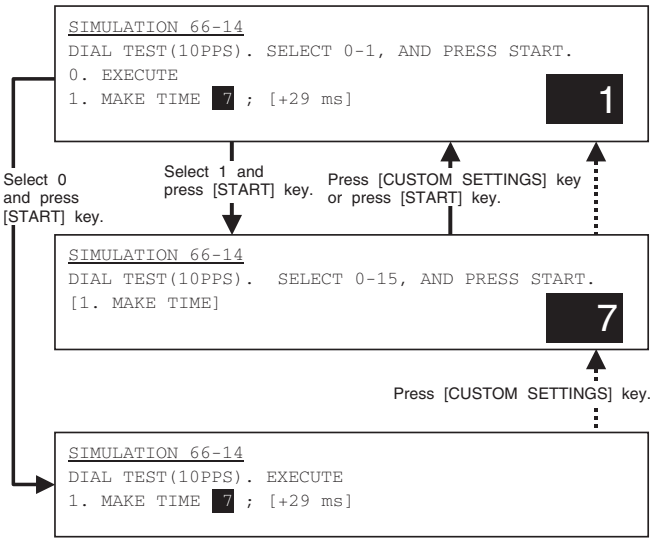

66-15

Purpose	Setting/Operation test/Check
Function (Purpose)	Used to set the make time in the FAX pulse dial mode (20pps) and to test the dial signal output. (The dial number signal set by SIM 66-13 is outputted.) Used to check troubles in dialing and to check the operation. (Only when FAX is installed)
Section	FAX
Item	Operation

Operation/Procedure

1) Enter 0 with 10-key.
2) Press [START] key.

The dial signal is outputted.

(Dial pulse make time setting)

1) Enter 1 with 10-key.
2) Press [START] key.
3) Enter the set value with 10-key.
4) Press [START] key.

0	EXECUTE	Execute
1	MAKE TIME	Dial pulse make time setting (0 - 15)

The dial signal is sent with the set value + 9ms.

When [CUSTOM SETTINGS] key is pressed during execution, the operation is stopped.

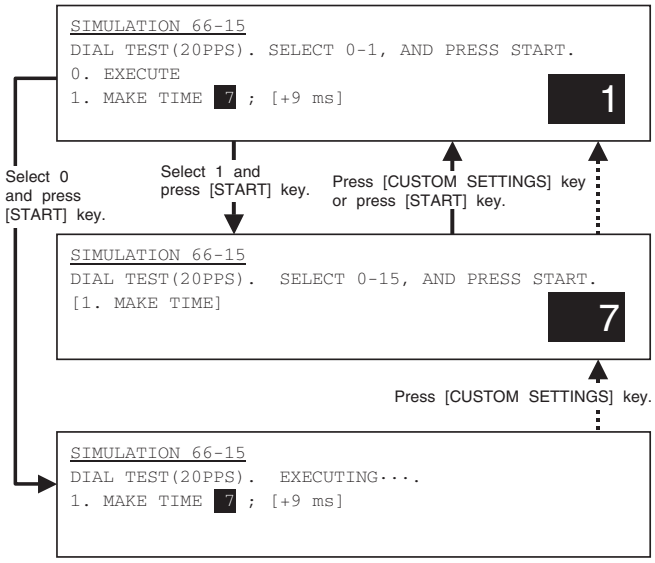

66-16

Purpose	Setting/Operation test/Check
Function (Purpose)	Used to check the dial signal (DTMF) output in the FAX tone dial mode. (The dial number signal set by SIM 66-13 is outputted.) The send level can be set to an optional level. Used to check troubles in dialing and to check the operation. (Only when FAX is installed)
Section	FAX
Item	Operation

Operation/Procedure

1) Enter 0 with 10-key.
2) Press [START] key.

The dial signal is outputted.

(Dial pulse make time setting)

1) Enter 1 or 2 with 10-key.
2) Press [START] key.
3) Enter the set value with 10-key.
4) Press [START] key.

Item			Set range
0	EXECUTE	Execution	
1	HIGH	High group level	0 - 15dB
2	HIGH LOW	High group - Low group	0 - 15

When [CUSTOM SETTINGS] key is pressed during execution, the operation is stopped.

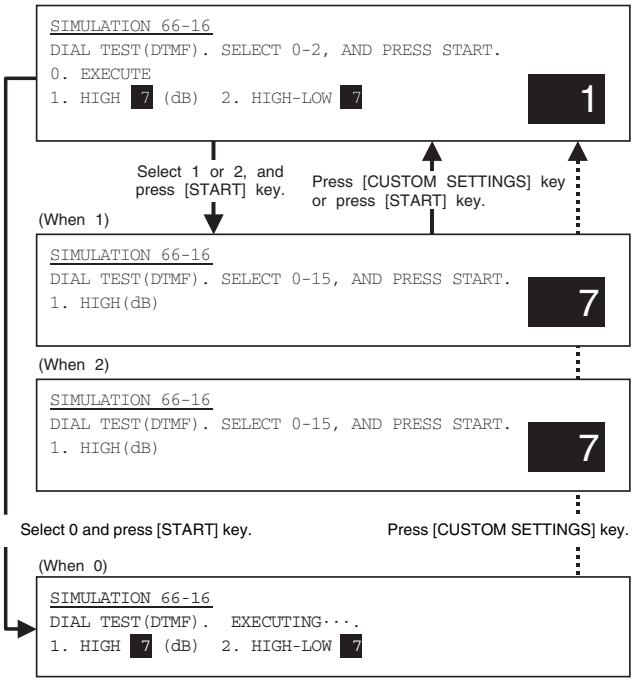

66-17

Purpose	Setting
Function (Purpose)	Used to check the dial signal (DTMF) output in the FAX tone dial mode. Send level: Max. Used to check the operation. (Only when FAX is installed)
Section	FAX
Item	Operation

Operation/Procedure

1) Enter the DTMF signal (1 - 9, 0, *, #) to be sent with 10-key.
2) Press [START] key.

The signal is sent in the max. send level.

When [CUSTOM SETTINGS] key is pressed during execution, the operation is stopped.

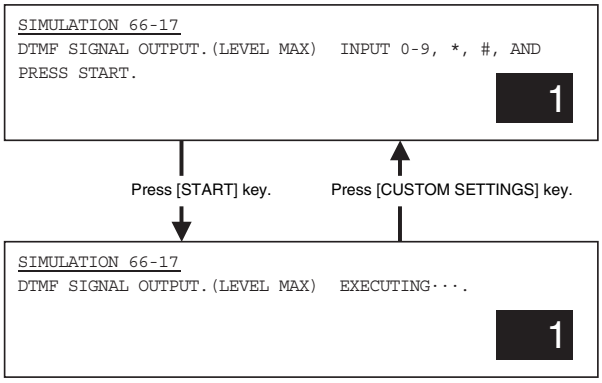

66-18

Purpose	Setting
Function (Purpose)	Used to check the dial signal (DTMF) output in the FAX tone dial mode. An output is sent at the send level set by the soft switch. Used to check the operation. (Only when FAX is installed)
Section	FAX
Item	Operation

Operation/Procedure

1) Enter the DTMF signal (1 - 9, 0, *, #) to be sent with 10-key.
2) Press [START] key.

The signal is sent in the send level set with the soft SW.

When [CUSTOM SETTINGS] key is pressed during execution, the operation is stopped.

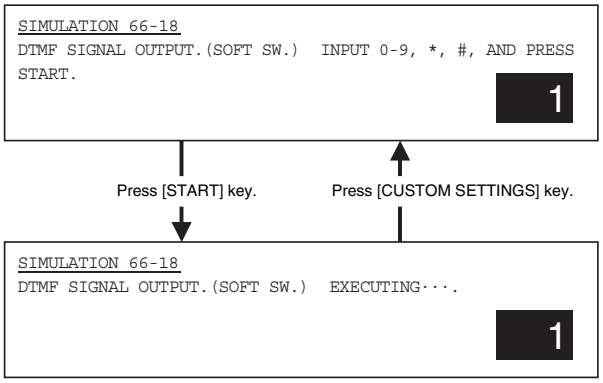

66-19

Purpose	Data transfer
Function (Purpose)	Used to back-up the HDD data into the Flash memory (optional FAX expansion memory: AR-MM9). (Only when FAX is installed)
Section	FAX
Item	Data

Operation/Procedure

1) Select YES/NO of data transfer (backup).

1	YES	Backup is executed.
2	NO	Backup is not executed.

2) Press [START] key.

This function is valid only when the AR-MM9 is installed.

Backup contents

- Address book data (FAX, Mail, Address)
- One-touch dial
- FTP expansion
- Group expansion
- Program
- Use index
- Standard sender
- IFAX sender registration
- FAX sender registration
- Item name
- Fine name
- FAX receive select table
- IFAX receive YES/NO
- Polling allow number
- Memory box
- Sender name
- Soft SW

The other contents are not backed up.

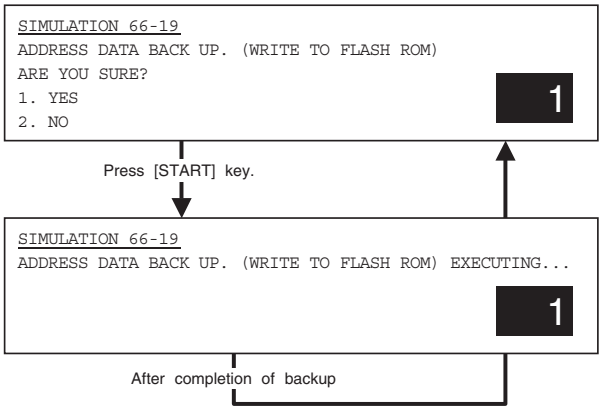

66-20

Purpose	Data transfer
Function (Purpose)	Used to read the back-up data by SIM 66-19 to the SRAM/HDD. (Only when FAX is installed)
Section	FAX
Item	Data

Operation/Procedure

1) Select YES/NO of data transfer.

1	YES	Backup is executed.
2	NO	Backup is not executed.

2) Press [START] key.

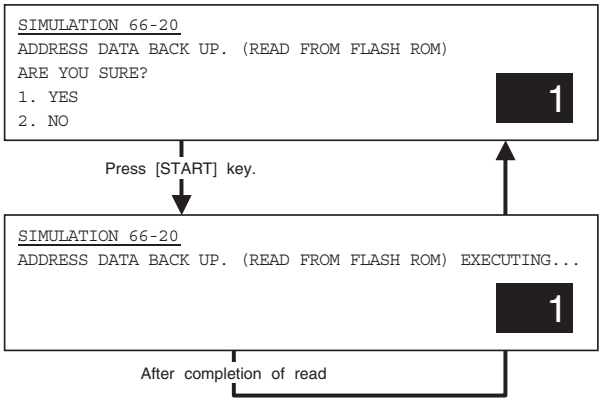

66-21

Purpose	Adjustment/Setup/Operation data output/Check (Display/Print)
Function (Purpose)	Used to print information related to FAX (various registrations, communication management, file management, system error protocol). (Only when FAX is installed)
Section	FAX
Item	Data

Operation/Procedure

1) Enter the number corresponding to the information (item) to be printed with 10-key.
2) Press [START] key.

1	REGISTERED	Various registration information
2	MANAGEMENT	Communication management information
3	FILE MANAGEMENT	File management information
4	SYSTEM ERROR	System error information
5	PROTOCOL	Protocol information

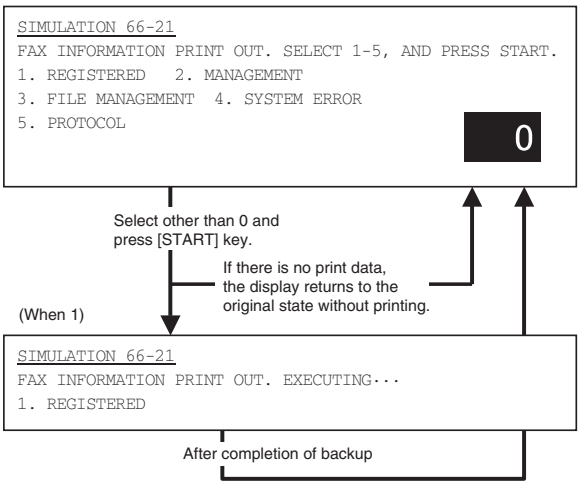

66-22

Purpose	Setting
Function (Purpose)	Used to adjust the handset volume. (Only when the FAX is installed.)
Section	FAX
Item	Operation

Operation/Procedure

1) Enter the number corresponding to the volume with 10-key.
2) Press [START] key.

1	MIN	Small
2	MIDDLE	Medium
3	MAX	Large

Selection of 1, 2, and 3 can be made during execution.

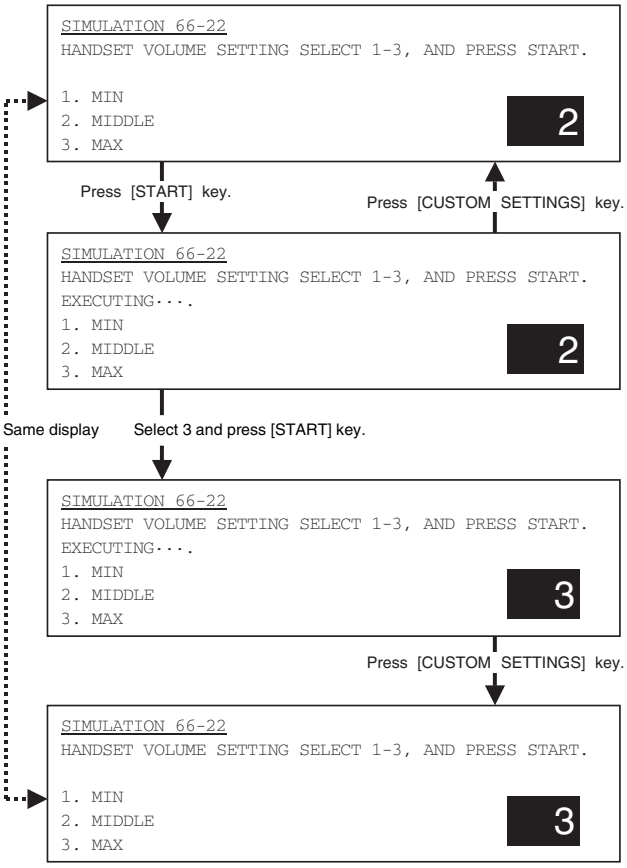

66-23

Purpose	Setting
Function (Purpose)	Used to download the FAX program. (Only when FAX is installed) Not used in the market. (For development)
Section	FAX
Item	

Operation/Procedure

1) Turn OFF the power.
2) Remove the protect pin.
3) Turn ON the power.
4) Enter the SIM 66-23 mode.
5) Press [START] key.

During operation, "EXECUTING" is displayed. When the operation is completed normally, "COMPLETE" is displayed.

If an error occurs, "FAIL" is displayed.

6) Turn OFF the power, and attach the protect pin.

```
SIMULATION 66-23
FAX PROGRAM DOWNLOAD.
EJECT PROTECT PIN, AND PRESS START.
```

Press [START] key.

```
SIMULATION 66-23
FAX PROGRAM DOWNLOAD. EXECUTING···
```

After completion of writing

```
SIMULATION 66-23
FAX PROGRAM DOWNLOAD.
COMPLETE
POWER OFF, AND SET PROTECT  PIN
```

After failing of writing

```
SIMULATION 66-23
FAX PROGRAM DOWNLOAD.
FAIL
CHECK PROTECT  PIN
```

66-24

Purpose	Clear
Function (Purpose)	Used to clear the FAST memory data. (Only when FAX is installed)
Section	FAX
Item	Data

Operation/Procedure

1) Select YES/NO of data clear.

1	YES	FAST memory data is cleared.
2	NO	Not cleared.

2) Press [START] key.

```
SIMULATION 66-24
FAST MEMORY DATA CLEAR.
ARE YOU SURE?
1. YES
2. NO
```

66-25

Purpose	Setting
Function (Purpose)	Used to register the FAX number for Modem dial-in. (Only when FAX is installed) Not used in the market. (For development)
Section	FAX
Item	Data

Operation/Procedure

1) Enter the Modem dial-in FAX number (1 - 9, 0, *, #) with 10-key.
2) Press [START] key.

```
SIMULATION 66-25
M-D-IN FAX NUMBER SETTING. 0-9:[0-9],*:[*],#:[#]
INPUT NUMBER AND PRESS START.
0123456789*#01234567
```

66-26

Purpose	Setting
Function (Purpose)	Used to register external telephone numbers for Modem dial-in. (Only when FAX is installed) Not used in the market. (For development)
Section	FAX
Item	Data

Operation/Procedure

1) Enter the Modem dial-in FAX number (1 - 9, 0, *, #) with 10-key.
2) Press [START] key.

```
SIMULATION 66-26
M-D-IN EXTEL NUMBER SETTING. 0-9:[0-9],*:[*],#:[#]
INPUT NUMBER AND PRESS START.
0123456789*#01234567
```

66-27

Purpose	Setting
Function (Purpose)	Used to register the transfer number for voice warp. (Only when FAX is installed) Not used in the market. (For development)
Section	FAX
Item	Data

Operation/Procedure

1) Enter the voice warp transfer number (1 - 9, 0, *, #) with 10-key.
2) Press [START] key.

```
SIMULATION 66-27
V-WP TRANSMIT NUMBER SETTING. 0-9:[0-9],*:[*],#:[#]
INPUT NUMBER AND PRESS START.
0123456789*#01234567
```

66-29

Purpose	Clear
Function (Purpose)	Used to clear data related to an address book (one-touch registration, program registration/ expansion, relay memory box registration, each table content).
Section	FAX, Network scanner
Item	Data

Operation/Procedure

1) Select YES/NO of data clear.

1	YES	Address book data is cleared.
2	NO	Not cleared.

2) Press [START] key.

```
SIMULATION 66-29
ADDRESS DATA CLEAR.
ARE YOU SURE?
1. YES
2. NO
                    1
```

66-30

Purpose	Operation test/Check
Function (Purpose)	Used to check the change in the TEL/LIU status. (Only when FAX is installed)
Section	FAX
Item	Operation

Operation/Procedure

The TEL/LIU state is displayed.

When the state is changed, it is highlighted.

HS1	Polarity reverse signal
HS2	Polarity reverse signal
RHS	Handset hook SW
EXHS	External telephone hook SW

```
SIMULATION 66-30
TEL/LIU SENSOR CHECK.
HS1   HS2   RHS   EXHS
                    1
```

66-31

Purpose	Operation test/Check
Function (Purpose)	Used to check the relay operation. (Only when FAX is installed)
Section	FAX
Item	Operation

Operation/Procedure

1) Enter the number corresponding to the check item with 10-key.
2) Press [START] key.

```
SIMULATION 66-31
TEL/LIU SETTING.
INPUT 0-1, AND PRESS START.
1. MPXA   2. CION   3. MR   4. EC
5. S.     6. CML    7. DP   8.
                    1 2 3 4 5 6 7 8
                    10001100
```

66-32

Purpose	Operation test/Check
Function (Purpose)	Used to check the receive data (fixed data) from the line. (Only when FAX is installed)
Section	FAX
Item	Operation

Operation/Procedure

When check is completed normally, "OK" is displayed. In case of an error, "NG" is displayed.

(Display message)

CHECKING	Checking
OK	Checking completed (OK)
NG	Checking completed (NG)

```
SIMULATION 66-32
RECEIVED DATA CHECK.
CHECKING····(OK or NG)
```

66-33

Purpose	Operation test/Check
Function (Purpose)	Used to check the signal (BUSY TONE/CNG/CED/FNET/DTMF) detection. (Only when FAX is installed)
Section	FAX
Item	Operation

Operation/Procedure

The detected signal is highlighted.

```
SIMULATION 66-33
SIGNAL DETECT CHECK.
BUSY TONE  CNG   CED   FNET   DTMF
```

66-34

Purpose	Operation test/Check
Function (Purpose)	Used to measure the communication time of test image data. (Only when FAX is installed)
Section	FAX
Item	Operation

Operation/Procedure

Communication test is performed to measure the time (ms).

Send is made under the following conditions.

Communication means	Memory send
Image quality	Normal text
Density	Light
ECM	ON
Sender record	OFF

```
SIMULATION 66-34
COMMUNICATION TIME DISPLAY.

* * * * * ms
```

66-35

Purpose	Setting
Function (Purpose)	Modem program rewriting. (Only when FAX is installed) Not used in the market. (For development)
Section	FAX
Item	Data

Operation/Procedure

1) Select YES/NO of Modem program reload.

1	YES	Modem block reload is cleared.
2	NO	Not reloaded.

2) Press [START] key.

When reload is completed normally, "OK" is displayed. In case of an error, "CHECK SUM" is displayed.

The result of Modem reload is displayed.

COMPLETE	Reload completed
81	Check sum error
82	Write error
83	Delete error
84	Verify error
NG	Due to loader NG

```
SIMULATION 66-35
MODEM PROGRAM RELOAD.
ARE YOU SURE?
1. YES
2. NO
```

1

Press [START] key.

```
SIMULATION 66-35
MODEM PROGRAM RELOAD.  EXECITOMG···
LOADER··· xxxxx
MODEM···· xxxxx
```

After completion of reloading

```
SIMULATION 66-35
MODEM PROGRAM RELOAD.
LOADER···OK
MODEM····COMPLETE
```

66-36

Purpose	Operation test/Check
Function (Purpose)	Used to check interface between MFPC controller and MDMC. (Check of the data line or the command line) (Only when FAX is installed)
Section	FAX
Item	Operation

Operation/Procedure

1) Enter the number corresponding to the check mode with 10-key.

1	MFPC ← MDMC	Date line once only
2	MFPC → MDMC	Date line once only
3	MFPC ← MDMC	Data line repeat
4	MFPC → MDMC	Data line repeat
5	MFPC ← MDMC	Command line once only
6	MFPC → MDMC	Command line once only
7	MFPC ← MDMC	Command line repeat
8	MFPC → MDMC	Command line repeat

2) Press [START] key.

When check is completed normally, "OK" is displayed. Incase of an error, "NG" is displayed.

When check is "repeat," the operation is continued until the result is NG or [CUSTOM SETTINGS] key is pressed.

```
SIMULATION 66-36
MFPC-MDMC I/F CHECK. INPUT 1-8, AND PRESS START.

1. MFPC<-MDMC(DATA once)
2. MFPC->MDMC(DATA once)
3. MFPC<-MDMC(DATA repeat)
4. MFPC->MDMC(DATA repeat)
5. MFPC<-MDMC(CMD once)
6. MFPC->MDMC(CMD once)
7. MDPC<-MDMC(CMD repeat)
8. MFPC->MDMC(CMD repeat)
```

1

Press [START] key.

```
SIMULATION 66-36
MFPC-MDMC I/F CHECK. INPUT 1-8, AND PRESS START.
EXECUTING...
```

When check is "once" or "repeat" and the result is "NG":

When check is "repeat" and [CUSTOM SETTINGS] key ON:

```
SIMULATION 66-36
MFPC-MDMC I/F CHECK. INPUT 1-8, AND PRESS START.
EXECUTING...(OK or NG)
```

66-39

Purpose	Setting	
Function (Purpose)	Used to set the destination specifications. (Only when FAX is installed)	
Section	FAX	
Item	Specifications	Operation

Operation/Procedure

1) Enter the number corresponding to the destination.
2) Press [START] key.

```
SIMULATION 66-39
  FAX DESTINATION SETUP.
  SELECT 1-6, AND PRESS START

0. NO DESTINATION
1. JAPAN
2. U.S.A./CANADA
3. EUROPE
4. AUSTRALIA
5. CHINA
6. ASIA
```

1

Press [START] key.

66-42

Purpose	Setting
Function (Purpose)	PIC program rewriting (Only when FAX is installed)
Section	FAX
Item	Operation

Operation/Procedure

1) The confirmation window is displayed. Select whether rewriting of the program into PIC installed in the FAX VOX is performed or not.

NOTE: Release the write protect notch.

FAX program writing enabled (Jumpers and DIP SW depending on the model.)

1	YES	Execution
2	NO	Cancel

2) Press [START] key.

When reload is completed normally, "OK" is displayed. In case of an error, "NG" is displayed.

NG cause:

- Write protect is set.
- PIC is not installed.
- Access error to PIC

```
SIMULATION 66-42
PIC PROGRAM RELOAD.
ARE YOU SURE ?
1.YES
2.NO
```

1

Press [START] key.

```
SIMULATION 66-42
PIC PROGRAM RELOAD EXECUTING ···.
```

Press [START] key.

Press [CUSTOM SETTINGS] key.

```
SIMULATION 66-42
PIC PROGRAM RELOAD
OK
```

66-43

Purpose	Setting
Function (Purpose)	PIC adjustment value writing (Only when FAX is installed)
Section	FAX
Item	Operation

Operation/Procedure

To execute this simulation, FAX program writing must be allowed. (Jumpers and DIP SW depending on the model.) The adjustment values in PIC are changed or rewritten.

1) Enter the number corresponding to the set item with 10-key.
2) Press [START] key.
3) Enter the set value.
4) Press [P] key.
5) Select 0.
6) The confirmation window is displayed. Select whether the PIC adjustment values are written or not.

YES	The adjustment values are collectively written into PIC installed in the FAX BOX.
NO	No writing

When writing of the PIC adjustment values is normally completed, “OK” is displayed. In case of an error, “NG” is displayed.

	Item	Content	Set range	Default
0	WRITING for PIC	Writing to PIC	–	–
1	ci_level_judge	Number of sensing until the CI signal level is setteld.	1-15	2
2	ci_cycle_min	CI signal cycle min. Time	0-254	10
3	ci_cycle_max	CI signal cycle max. time	0-254	107
4	ci_range	CI signal allowable range	0-127	5
5	ci_count	CI signal settlement number of times	1-15	3
6	ci_detect	CID IN- signal settlement number of times	1-15	8
7	fnet_level_judge	Sense number of times until settlement of FNET signal level	1-15	1
8	fnet_range	FNET signal allowable range	0-74	3
9	fnet_time_out	FNET time out time	76-255	100
10	fnet_count	FNET signal settlement number of times	1-15	3
11	poff_time	PON signal OFF time	0-15	3
12	mswon_level_judge	Sense number of times until settlement of MSW_ON signal level	2-15	3

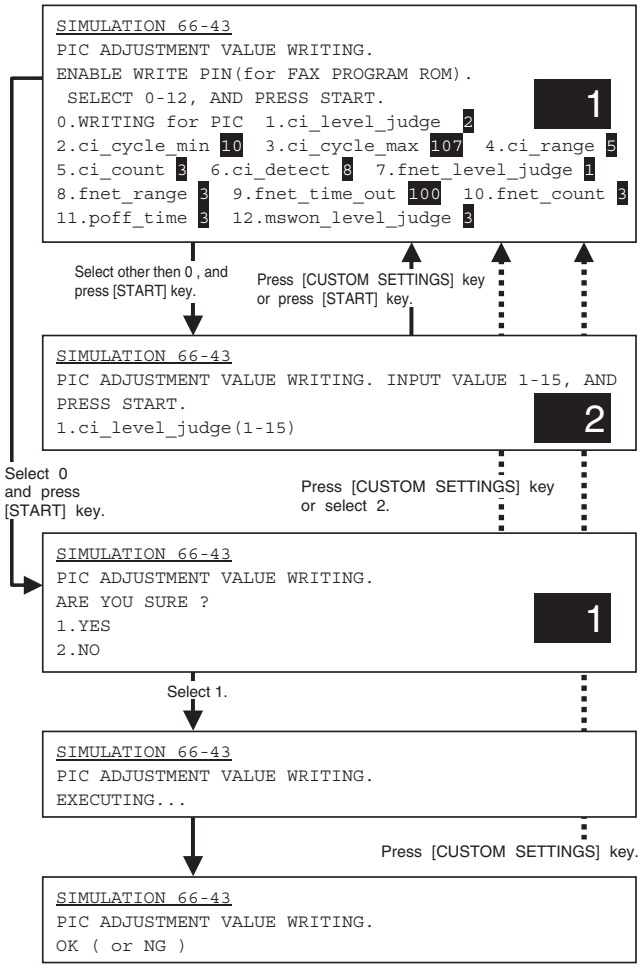

67-2

Purpose	Operation test/Check
Function (Purpose)	Used to check the operation of the parallel I/F of the printer. (This simulation is for production only, and requires a special tool for execution. Not used in the market.)
Section	MFP controller
Item	Operation Interface/Communication

Operation/Procedure

(Display message)

WAITING	Waiting
READY	Check start OK
OK	Check end (Normal)
STAGE*NG	Check end (Error in stage *. *: 1 - 11)

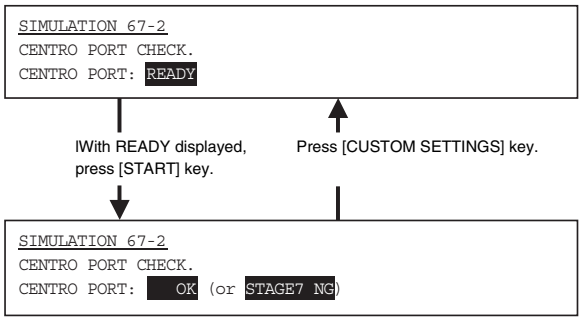

67-11

Purpose	Setting
Function (Purpose)	Used to set YES/NO of the parallel I/F select signal of the printer.
Section	MFP controller
Item	Operation Interface/Communication

Operation/Procedure

1) Enter the number corresponding to the select IN signal YES/NO setting with 10-key.

Item		Default
0	OFF	1
1	ON	

2) Press [START] key.

When the printer parallel I/F is used and a trouble is generated in the communication between the PC and the printer, change the setting of this simulation.

```
SIMULATION 67-11
CENTRO SELECT IN SIGNAL SETTING. SELECT 0-1, AND PRESS
START.
0. OFF
1. ON
```

67-16

Purpose	Operation test/Check
Function (Purpose)	Used to check the operation of the network card.
Section	MFP controller
Item	Operation Interface/Communication

Operation/Procedure

During check, "CHECKING" is displayed. When check is completed normally, "OK" is displayed. In case of an error, "NG" is displayed.

(Display message)

CHECKING	Checking
OK	Check end (Normal)
NG	Check end (Error)

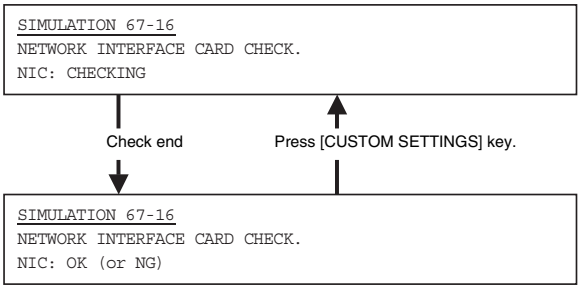

3. Other related items

(1) Simulation adjustment value/ Set value data

Each controller is provided with an EEPROM. The adjustment/set values are collected to the MFP controller. If they are changed, they are sent back and saved.

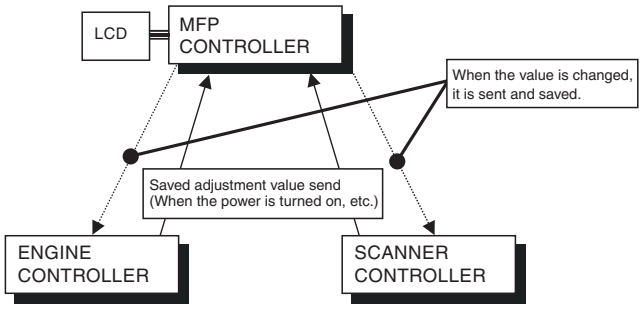

● **Data saved by the PCU PWB**

Counters	Adjustment value	Other
Drum rotation time counter (Accumulated time)	Developing bias voltage value	Serial number
Developer unit rotation time counter	Cleaning mode developing bias voltage value	Trouble history
Toner supply time (Block IC CHIP)	Main high voltage adjustment	Tray 1 size
Drum rotating time (Block IC CHIP)	Transfer charger voltage value	LCC size
Total counter	Transfer belt cleaning voltage value	Manual destination information
Maintenance counter	Toner concentration reference value	
Developing counter	Density correction start set time (Developer unit)	Tray 2 destination information
Drum counter	Density correction rotation time (Developer tank)	
Toner cartridge counter	Density correction amount (Developer tank)	Tray 1 paper remaining quantity data
Valid paper counter	Correction execution direction, upper/lower limit (Developer tank)	Tray 2 paper remaining quantity data
Tray 1 paper feed counter	Toner concentration temperature correction (low temperature side) correction amount	Tray 3 paper remaining quantity data
Tray 2 paper feed counter	Toner concentration temperature correction (low temperature side) set temperature	Tray 4 paper remaining quantity data
Tray 3 paper feed counter	Toner concentration temperature correction (low temperature side) release temperature	Final toner concentration sensor output value
Tray 4 paper feed counter	Toner concentration temperature correction (high temperature) correction amount	Toner cartridge IC CHIP destination
Manual paper feed counter	Toner concentration temperature correction (high temperature side) judgment temperature	Counter mode setting
ADU paper feed counter	Toner concentration temperature correction (high temperature side) judgment voltage	White paper exit count setting
Staple counter	Toner concentration temperature correction (high temperature side) correction value	Trouble memory mode setting
Punch counter	Toner concentration temperature correction (low temperature side) release time	Fusing operation mode (Prevention against curl)
Main unit right-side paper exit counter	Toner concentration temperature correction (high temperature side) toner concentration delay time	CE mark conforming operation mode
	Multi-purpose width adjustment value	Maintenance cycle
	Manual width adjustment value	Print stop setting when developer life over
Saddle staple counter	Heater lamp temperature (Center, normal control)	Saddle alignment operation priority mode
	Lead edge adjustment	PCU SOFT SW
	Led edge void set value	
	Rear edge void set value	
	Side edge setting	
	Print off-center adjustment value	
	Resist amount adjustment value	
	Laser power adjustment value	
	PPD1 sensor adjustment	
	Process correction inhibit allow set value	
	Developing bias rising correction wait time	
	Developing bias rising correction adjustment value	
	Built-in finisher jogger position adjustment	
	Saddle adjustment value	

● **Data saved by the scanner control PWB**

Counters	Adjustment value	Other
Scan counter	Document lead edge adjustment value	Exposure mode set value
SPF paper pass counter	Document off-center adjustment value	Scanner serial number
SPF stamp counter	Document image loss amount adjustment value	Document image loss amount adjustment value
	Magnification ratio adjustment value	Scanner soft SW
	SPF resist amount adjustment value	
	Exposure motor speed adjustment value	
	Platen document detection adjustment value	
	SPF size width detection adjustment value	
	Touch panel adjustment value	
	Exposure level adjustment value	
	ϒ change value	
	OC/SPF exposure correction value	
	Shading adjustment value (CCD/CIS)	
	CCD shading start position adjustment value	

● **Data saved by the MFP control PWB**

Counters	Adjustment value	Other
Copy counter	FAX SOFT SW., etc.	Trouble history
Printer counter		JAM history
FAX receive counter		Destination setting
FAX send counter		Language setting
All valid paper counter		Toner save mode setting
Trouble counter		13" setting
JAM counter		Auditor setting
		Counter mode setting
		Trouble memory mode setting
		Center binding mode AMS setting
		PC/MODEM communication trouble detection YES/NO setting
		Tag number set value
		Printers set values
		Network set value
		MFP soft SW

[10] MACHINE OPERATION

1. Acceptable originals

A stack of up to 50 original sheets (30 original sheets*1 for 8-1/2" x 14" (B4) or larger) of the same size paper can be set in the document feeder tray provided the stack height is within the limit shown below.

A stack of up to 30 mixed size originals can be set if the width of the originals is the same and the stack height is within the limit shown below. In this case, however, stapling and duplex will not function and some special functions may not give the expected result.

*1: For paper heavier than 28 lbs. (105g/m^2), only a stack of up to 15 sheets can be set. Setting 16 or more sheets may cause incorrect scanning of original and scanned image may become expanded compared with original itself.

A. Size and weight of acceptable originals

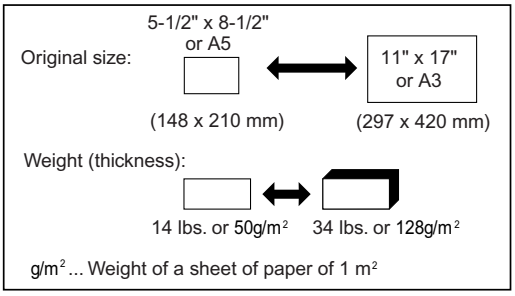

B. Total number of originals that can be set in the document feeder tray

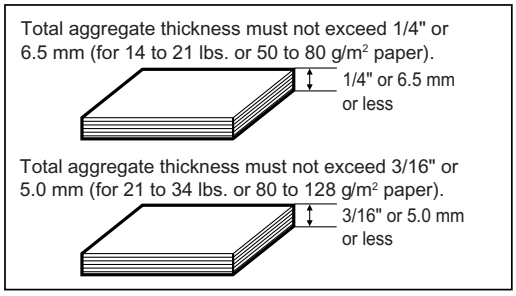

<Notes on use of the automatic document feeder>

- Use originals within the specified size and weight ranges. Use of originals out of the specified range may cause an original misfeed.
- Before loading originals into the document feeder tray, be sure to remove any staples or paper clips.
- If originals have damp spots from correction fluid, ink or glue from pasteups, be sure they are dried before they are fed. If not, the interior of the document feeder or the document glass may be soiled.
- Do not use the following originals. These originals may cause incorrect original size detection, original misfeeds, and smudges on copies.

  Transparency film, tracing paper, carbon paper, thermal paper or originals printed with thermal transfer ink ribbon should not be fed through the document feeder. Originals to be fed through the feeder should not be damaged, crumpled or folded or have loosely pasted paper on them or cutouts in them. Originals with multiple punched holes other than two-hole or three-hole punched paper may not feed correctly.
- When using originals with two or three holes, place them so that the punched edge is at a position other than the feed slot.

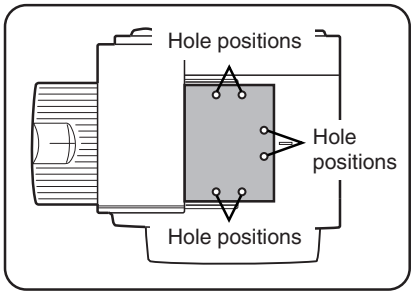

2. Standard original placement orientations

Place originals in the document feeder tray or on the document glass so that the top and bottom of the original is positioned as shown in the illustration. If not, staples will be incorrectly positioned and some special features may not give the expected result.

[Example 1]

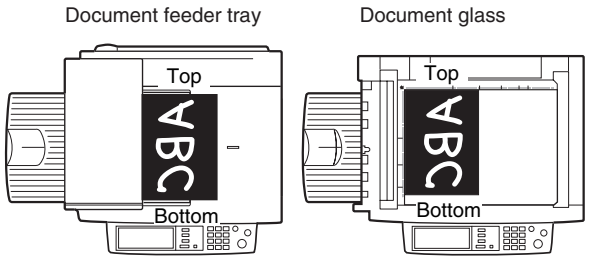

[Example 2]

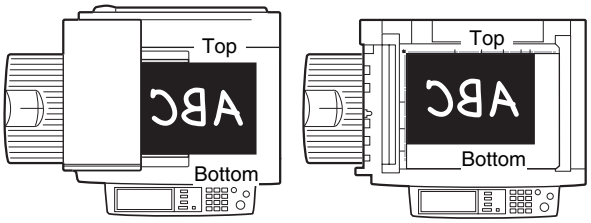

3. Automatic copy image rotation - rotation copying

If the orientation of the originals and copy paper are different, the original image will be automatically rotated 90° and copied. (When an image is rotated, a message will be displayed.) If a function is selected that is not suitable for rotation, such as enlarging the copy to greater than 8-1/2" x 11" (A4) size or staple sorting with the saddle stitch finisher, rotation will not be possible.

[Example]

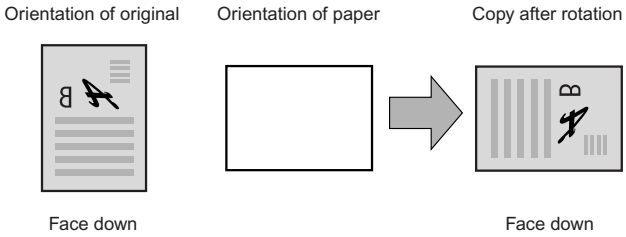

4. Specifications of paper trays

The specifications for types and sizes of paper that can be used in each tray are shown below.

Tray		Tray No. (tray name)	Applicable paper types		Applicable paper sizes	Paper weight
Paper tray 1		Tray 1	Plain paper (Refer to the next page for applicable plain papers.)		• 8-1/2" x 11", A4, B5	16 to 28 lbs. or 60 to 105g/m²
Multi purpose drawer/ bypass tray		Tray 2/ bypass tray	Plain paper (Refer to the next page for applicable plain papers.)		• If "AUTO-INCH" is selected in setting the paper type and paper size, the following paper sizes can be used with the automatic detection function: 11" x 17", 8-1/2" x 14", 8-1/2" x 11", 8-1/2" x 11"R, 7-1/4" x 10-1/2"R, 5-1/2" x 8-1/2"R • If "AUTO-AB" is selected in setting the paper type and paper size, the following paper sizes can be used with the automatic detection function: A3, B4, A4, A4R, B5, B5R, A5R, 8-1/2" x 13" • Non-standard sizes	16 to 34 lbs. or 60 to 128g/m²
			Special paper (Refer to the next page for applicable special papers.)	• Thick paper • Labels, transparency film	• If "AUTO-INCH" is selected in setting the paper type and paper size, the following paper sizes can be used with the automatic detection function: 8-1/2" x 11", 8-1/2" x 11"R • If "AUTO-AB" is selected in setting the paper type and paper size, the following paper sizes can be used with the automatic detection function: A4, A4R, B5, B5R • Non-standard sizes	See the remarks for special paper on the next page.
				Postcard	• Japanese official postcard	
				Envelopes can only be fed from the multi-purpose drawer. Applicable stock weight for envelopes is 20 to 23 lbs. or 75 to 90g/m²	• Applicable standard size envelopes: COM-10, Monarch, DL, C5, ISO B5, CHOKEI 3 • Non-standard size	
Stand/3 x 500 sheet paper drawer	Upper	Tray 2	Same as multi purpose drawer			
	Middle	Tray 3	Plain paper (Refer to the “A. Applicable plain paper”.)		• If "AUTO-INCH" is selected in setting the paper type and paper size, the following paper sizes can be used with the automatic detection function: 11" x 17", 8-1/2" x 14", 8-1/2" x 11", 8-1/2" x 11"R, 7-1/4" x 10-1/2" • If "AUTO-AB" is selected in setting the paper type and paper size, the following paper sizes can be used with the automatic detection function: A3, B4, A4, A4R, B5, B5R, 8-1/2" x 13"	16 to 28 lbs. or 60 to 105g/m²
	Lower	Tray 4				
Stand/MPD & 2000 sheet paper drawer	Upper	Tray 2	Same as multi purpose drawer			
	Lower	Tray 3	Plain paper (Refer to the next page for applicable plain papers.)		• 8-1/2" x 11", A4	16 to 28 lbs. or 60 to 105g/m²

A. Applicable plain paper

For satisfactory results, plain paper must conform to the following requirements.

	Paper in AB system	Paper in inch system
	A5 to A3	5-1/2" x 8-1/2" to 11" x 17"
Plain paper	16 to 28 lbs. or 60 to 105g/m²	
Recycled, colored, pre-punched, pre-printed and letterhead papers must conform to the same conditions as above.		

B. Applicable special paper

For satisfactory results, special paper must conform to the following requirements.

	Type	Remarks
Special paper	Thick paper	• For 5-1/2" x 8-1/2" to 8-1/2" x 11" or A5 to A4 sizes, thick paper ranging from 16 to 34 lbs. or 60 to 128g/m² can be used. • For sizes larger than 8-1/2" x 11" or A4, thick paper ranging from 16 to 28 lbs. or 60 to 105g/m² can be used. • Other thick papers Index stock (65 lbs. or 176g/m²) can be used. Cover stock (110 lbs. or 200 to 205g/m²) can be used but only for 8-1/2" x 11", A4 paper in the portrait orientation. • For 5-1/2" x 8-1/2" or A5 paper, the orientation must be landscape.
	Transparency film, labels, and tracing paper	• Use SHARP recommended paper. Do not use labels other than SHARP recommended labels. Doing so may leave adhesive residue in the machine, causing paper misfeeds, smudges on prints or other machine trouble.
	Postcards	• Japanese official postcards can be used.
	Envelopes	• Applicable standard envelopes: COM-10, Monarch, DL, C5, ISO B5, CHOKEI 3 • Envelopes can only be fed from the tray 2. Applicable paper stock weight for envelopes is 20 to 23 lbs. or 75 to 90g/m².

5. Printing onto envelopes

- Do not use envelopes that have metal clasps, plastic snaps, string closures, windows, linings, self-adhesive patches or synthetic materials. Attempting to print on these may cause misfeeds, inadequate toner adherence or other trouble.
- Creases or smudging may occur. This is especially true of embossed surfaces and other irregular surfaces.
- Under high humidity and temperature conditions the glue flaps on some envelopes may become sticky and be sealed closed when printed.
- Use only envelopes which are flat and crisply folded. Curled or poorly formed envelopes may be poorly printed or may cause misfeeds.

A. Fusing unit pressure adjusting levers

When feeding envelopes from the multi purpose drawer, damage to the envelopes or smudges on prints may occur even if envelopes within specification are used. In this case, the problem may be reduced by shifting the fusing unit pressure adjusting levers from the normal position to the lower pressure position. Follow the procedure below.

NOTE: Be sure to return the lever to the normal position when finished feeding envelopes. If not, inadequate toner adherence, paper misfeeds or other trouble may occur.

1) Unlatch the duplex module and slide it to the left.

   Unlatch the module and gently move the module away from the machine. If the machine is not equipped with a duplex module, open the side cover similarly.

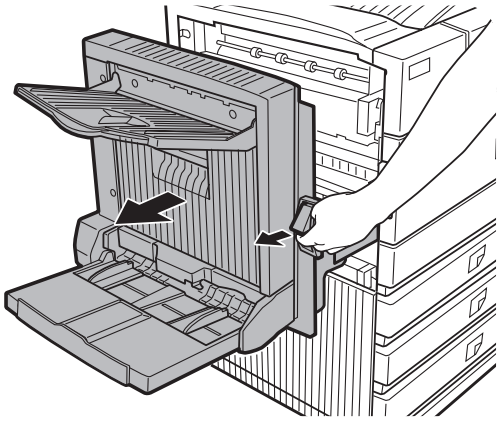

2) Lower the two fusing unit pressure adjusting levers marked A and B in the illustration.

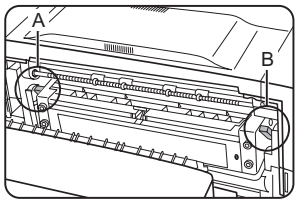

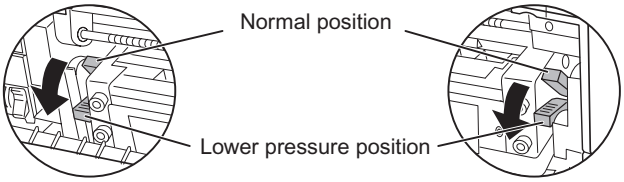

A: Rear side of fusing unit

B: Front side of fusing unit

3) Gently close the duplex module.

   If the machine is not equipped with a duplex module, close the side cover.

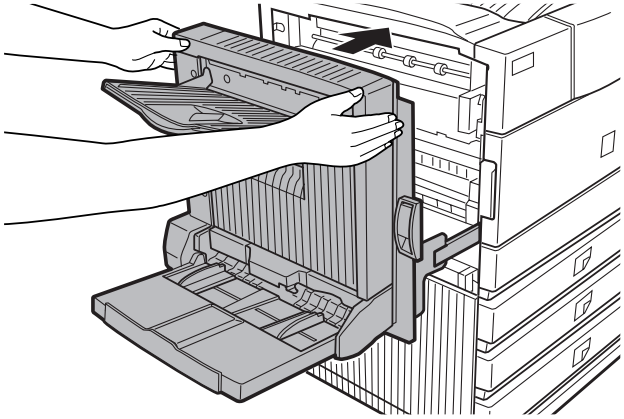

[11] TROUBLE CODES

1. General

When a trouble occurs in the machine or when the life of a consumable part is nearly expired or when the life is expired, the machine detects and displays it on the display section. This allows the user and the serviceman to take the suitable action. In case of a trouble, this feature notifies the occurrence of a trouble and stops the machine to minimize the damage.

1) Securing safety. (The machine is stopped on detection of a trouble.)
2) The damage to the machine is minimized. (The machine is stopped on detection of a trouble.)
3) By displaying the trouble content, the trouble position can be quickly identified. (This allows to perform an accurate repair, improving the repair efficiency.)
4) Preliminary warning of running out of consumable parts allows to arrange for new parts in advance of running out. (This avoids stopping of the machine due to running out the a consumable part.)

2. Trouble codes list

Trouble codes		Contents	Remark	Trouble detection
C1	00	MC trouble		PCU
E6	11	CSI shading trouble (White correction)	When the scanner is installed	SCANNER
	14	CIS communication trouble	When the scanner is installed	SCANNER
E7	01	System data trouble		ICU
	02	Laser trouble		PCU
	03	HDD trouble	With HDD installed	ICU
	06	Decode error trouble		ICU
	10	Shading trouble (Black correction)	When the scanner is installed	SCANNER
	11	Shading trouble (White correction all pixel adjustment)	When the scanner is installed	SCANNER
	14	CCD communication trouble	When the scanner is installed	SCANNER
	17	SPF scanning position adjustment trouble (Detected only when executing an adjustment SIM.)		
	50	LSU connection trouble		PCU
	60	Controller skating trouble		
	80	Communication trouble (ICU detection) between ICU and scanner	When the scanner is installed	ICU
	90	Communication trouble (ICU detection) between ICU and PCU	When the scanner is installed	ICU
F1	00	Finisher communication trouble	With Finisher installed	PCU
		Mail-bin stacker communication trouble	With Mail bin stacker installed	PCU
F1	02	Finisher transport motor abnormality	With Finisher installed	PCU
		Mail-bin stacker transport motor abnormality	With Mail bin stacker installed	
	03	Console finisher paddle motor trouble	With Console Finisher installed	PCU
	06	Console finisher slide motor trouble	With Console Finisher installed	PCU
	08	Finisher staple shift motor trouble	With Finisher installed	PCU
	10	Finisher stapler motor trouble	With Finisher installed	PCU
		Console finisher stapler motor trouble	With Console Finisher installed	PCU
	11	Finisher bundle exit motor trouble	With Finisher installed	PCU
		Console finisher bundle exit motor trouble	With Console Finisher installed	PCU
	12	Mail-bin stacker gate trouble	With Mail bin stacker installed	PCU
	15	Finisher lift motor trouble	With Finisher installed	PCU
		Console finisher lift motor trouble	With Console Finisher installed	PCU
	19	Finisher front alignment motor trouble	With Finisher installed	PCU
		Console finisher front alignment motor trouble	With Console Finisher installed	PCU
	20	Finisher rear alignment motor trouble	With Finisher installed	PCU
		Console finisher rear alignment motor trouble	With Console Finisher installed	PCU
	30	Console finisher communication trouble	With Console Finisher installed	PCU
	31	Console finisher fold sensor trouble	With Console Finisher installed	PCU
	32	Communication trouble between the console finisher and the punch unit.	With Console Finisher installed	PCU
	33	Console finisher punch side registration motor trouble	With Console Finisher installed	PCU
	34	Console finisher punch motor trouble	With Console Finisher installed	PCU
	35	Console finisher punch side registration sensor trouble	With Console Finisher installed	PCU

Trouble codes		Contents	Remark	Trouble detection
F1	36	Console finisher punch timing sensor trouble	With Console Finisher installed	PCU
	37	Console finisher backup RAM trouble	With Console Finisher installed	PCU
	38	Console finisher punch backup RAM trouble	With Console Finisher installed	PCU
	39	Console finisher punch dust sensor trouble	With Console Finisher installed	PCU
	40	Console finisher punch power interruption trouble	With Console Finisher installed	PCU
	80	Finisher power abnormality	With Finisher installed	PCU
		Mail-bin stacker power abnormality	With Mail bin stacker installed	PCU
	81	Console finisher transport motor abnormality	With Console Finisher installed	PCU
	87	Finisher staple rotation motor trouble	With Finisher installed	
F2	00	Toner control sensor open/ sensor trouble		PCU
	02	Toner supply abnormality		PCU
	04	Improper cartridge (life cycle error, etc.)		PCU
	05	CRUM error		PCU
	39	Process thermistor trouble		PCU
F3	12	Machine no. 1 tray lift-up trouble		PCU
	22	Machine tray 2 lift-up trouble	Multi-purpose tray	PCU
F6	00	Communication trouble (ICU detection) between ICU and FAX	When the Fax board is installed	ICU
	01	FAX expansion flash memory abnormality (ICU detection)	When the Fax board is installed	ICU
	04	FAX modem operation abnormality	When the Fax board is installed	FAX
	20	FAX write protect cancel	When the Fax board is installed	FAX
	21	Combination abnormality of the TEL/LIU PWB and the FAX soft switch	When the Fax board is installed	FAX
	97	FAX-BOX skating trouble	When the Fax board is installed	FAX
	98	Combination error of the FAX-BOX destination information and the machine destination information	When the Fax board is installed	FAX
F7	01	FAX board EEPROM read/ write error	When the Fax board is installed	FAX
H2	00	Thermistor open (HL1)		PCU
	01	Thermistor open (HL2)		PCU
H3	00	Fusing section high temperature trouble (HL1)		PCU
	01	Fusing section high temperature trouble (HL2)		PCU

Trouble codes		Contents	Remark	Trouble detection
H4	00	Fusing section low temperature trouble (HL1)		PCU
	01	Fusing section low temperature trouble (HL2)		PCU
H5	01	5-time continuous POD1 not-reaching jam detection		PCU
L1	00	Scanner feed trouble	When the scanner is installed	SCANNER
L3	00	Scanner return trouble	When the scanner is installed	SCANNER
L4	01	Main motor lock detection		PCU
	02	Drum motor lock detection		PCU
	30	Controller fan motor lock detection		
L6	10	Polygon motor lock detection		PCU
L8	01	No fullwave signal		PCU
	02	Full wave signal width abnormality		PCU
U1	01	FAX battery abnormality	With FAX board installed	Controller
	02	RTC read abnormality (common with FAX, on ICU PWB)	When the Fax board is installed	ICU
U2	00	EEPROM read/write error (ICU)		Controller
	11	Counter check sum error (ICU)		Controller
	12	Adjustment value check sum error (ICU)		Controller
	22	SRAM memory check sum error (ICU)		ICU
	23	SRAM memory individual data check sum error (ICU)		
	50	HD section individual data check sum error (ICU)		
	80	EEPROM read/write error (Scanner)	When the scanner is installed	SCANNER
	81	Memory check sum error (Scanner)	When the scanner is installed	SCANNER
	90	EEPROM read/write error (PCU)		PCU
	91	Memory check sum error (PCU)		PCU
U6	00	Desk/LCC communication trouble	With Paper feed desk installed	PCU
	01	Desk/LCC No. 1 tray lift-up trouble	With Paper feed desk installed	PCU
	02	Desk No. 2 tray/LCC1 lift-up trouble	With Paper feed desk installed	PCU
	03	Desk No. 3 tray/LCC2 lift-up trouble	With Paper feed desk installed	PCU
	10	Desk/LCC transport motor trouble	With Paper feed desk installed	PCU
U7	00	RIC communication trouble		Controller

Trouble codes		Contents	Remark	Trouble detection
CH	--	Door open (CH ON)		PCU
	00	No developer cartridge		PCU
	01	No toner cartridge		PCU
	02	No drum cartridge		PCU
EE	EL	Auto developer adjustment trouble (Over-toner)	Only during DIAG	PCU
	EU	Auto developer adjustment trouble (Under-toner)	Only during DIAG	PCU
PC	--	Personal counter not installed		Controller
PF	--	RIC copy inhibit signal is received.		Controller
--	--	Auditor not ready		Controller

3. Details of trouble codes

MAIN	SUB	Details	
C1	00	Content	MC trouble
		Detail	Main charger output abnormality (Output open) Trouble signal is outputted from the high voltage transformer.
		Cause	The main charger is not installed properly. The main charger is not assembled properly. Disconnection of connector of high voltage transformer. High voltage harness disconnection or breakage.
		Check and remedy	Use the SIM 8-2 to check the main charger output. Check for disconnection of the main charger. Replace the high voltage unit.
E6	11	Content	CSI shading trouble (White correction)
		Details	The CIS white reference plate scan level is abnormal when the lamp is on.
		Cause	Abnormal harness installation to CIS unit Dirt on the white reference plate. CIS lighting error CIS unit installation trouble CIS unit abnormality Scanner PWB abnormality
		Check & Remedy	Clean the white reference plate. Check CIS light quantity (SIM 5-3) and lighting. Check CIS unit harness. Check scanner PWB.
	14	Content	CIS communication trouble
		Details	Communication trouble (clock sync) between scanner PWB and CIS-ASIC
		Cause	Abnormal harness installation to CIS unit CIS unit abnormality Scanner PWB abnormality
		Check & Remedy	Check CIS unit harness. Check CIS unit. Check scanner PWB.

MAIN	SUB	Details	
E7	01	Content	System data trouble
		Detail	When in data storage/acquiring of the HDD system area, the HDD responds an error and does not respond for 30sec, it is judged as a trouble.
		Cause	The HDD is not properly installed to the ICU PWB. The HDD does not work for the ICU PWB. ICU PWB abnormality
		Check and remedy	Check installation of the HDD to the ICU PWB. Check harness connection of the HDD from the ICU PWB. Use SIM62-2, 3 to check the HDD read/write. Replace the HDD. Replace the ICU PWB.
E7	02	Content	Laser trouble
		Detail	BD signal from LSU is kept OFF, or ON.
		Cause	The connector of LSU or the harness in LSU is disconnected or broken. The polygon motor does not rotate normally. The laser home position sensor in LSU is shifted. The proper voltage is not supplied to the power line for laser. Laser emitting diode trouble PCU PWB trouble ICU PWB trouble
		Check and remedy	Check for disconnection of the LSU connector. Use SIM 61-1 to check LSU operation. Check that the polygon motor rotates normally or not. Check light emission of laser emitting diode. Replace the LSU unit. Replace the PCU PWB. Replace the ICU PWB.
	03	Content	HDD trouble
		Detail	HDD connection failure If the HDD responds an error or does not respond for 30sec, it is judged as an error. (Other than the system area) Data abnormality in the file management area (when the cluster chain is broken)
		Cause	HDD is not installed properly to the ICU PWB. HDD does not operate properly in the ICU PWB. ICU PWB trouble
		Check and remedy	Check installation of HDD to the ICU PWB. Check connection of the harness of HDD to the ICU PWB. Use SIM 62-2, -3 to check read/write of HDD. Replace HDD. Replace ICU PWB.

MAIN	SUB	Details	
E7	06	Content	Decode error trouble
		Detail	A decode error occurs during making of an image.
		Cause	Data error during input from PCI to PM. PM trouble Data error during image compression/ transfer. ICU PWB abnormality
		Check and remedy	Check insertion of the PWB. (PCI bus) If the error occurred in a FAX job, check installation of the FAX PWB. For the other cases, check the ICU PWB. Replace the ICU PWB.
	10	Content	Shading trouble (Black correction)
		Details	CCD black scan level abnormality when the copy lamp is off.
		Cause	Abnormal installation of flat cable to CCD unit. CCD unit abnormality Scanner PWB abnormality
		Check & Remedy	Check installation of CCD unit flat cable. Check CCD unit. Check scanner PWB.
	11	Content	Shading trouble (White correction all pixel adjustment)
		Details	CCD white reference plate scan level abnormality when the copy lamp is ON.
		Cause	Abnormal installation of flat cable to CCD unit. Dirt on mirror, lens, white reference plate Copy lamp lighting abnormality Abnormal installation of CCD unit CCD unit abnormality Scanner PWB abnormality
		Check & Remedy	Clean mirror, lens, and white reference plate. Check copy lamp light quantity (SIM 5-3) and lighting. Check CCD unit. Check scanner PWB.
	14	Content	CCD communication trouble
		Details	Communication trouble (clock sync) between scanner PWB and CCD-ASIC
		Cause	Abnormal installation of harness to CCD unit CCD unit abnormality Scanner PWB abnormality
		Check & Remedy	Check CCD unit harness. Check CCD unit. Check scanner PWB.
	17	Content	SPF scanning position adjustment trouble (Detected only when executing an adjustment SIM.)
		Details	The black Mylar which serves as the reference of the SPF scanning position is not detected.
		Cause	Black Mylar installing failure on the SPF side
		Check & Remedy	Check the SPF black Mylar.

MAIN	SUB	Details	
E7	50	Content	LSU connection trouble
		Detail	An LSU which does not conform to the machine is installed.
		Cause	LSU connection trouble PCU PWB trouble LSU trouble
		Check and remedy	Check LSU PWB. Check PCU PWB. Check connection of the connector and the harness between PCU and LSU.
	60	Content	Controller skating trouble
		Detail	Occurrence of an error in controller skating check
		Cause	Discrepancy in the combination of the controller PWB and the ROM
		Check and remedy	Check the controller PWB. Check the combination of the controller PWB and the ROM.
	80	Content	Communication trouble (ICU detection) between ICU and scanner
		Details	Communication establishment error/ Fleming/Parity/Protocol error
		Cause	Defective connection of slave unit PWB connector Defective harness between slave unit PWB and ICU PWB Slave unit PWB mother board connector pin breakage
		Check & Remedy	Check connector and harness of slave unit PWB and ICU PWB. Check grounding of machine.
	90	Content	Communication trouble (ICU detection) between ICU and PCU
		Details	Communication establishment error/ Fleming/Parity/Protocol error
		Cause	Defective connection of slave unit PWB connector Defective harness between slave unit PWB and ICU PWB Slave unit PWB mother board connector pin breakage
		Check & Remedy	Check connector and harness of slave unit PWB and ICU PWB. Check grounding of machine.
F1	00	Content	Finisher communication trouble
		Detail	Communication cable test error after turning on the power or exiting from SIM. Communication error with the finisher
		Cause	Improper connection or disconnection of connectors and harness between the machine and the finisher. Finisher control PWB trouble Control PWB (PCU) trouble Malfunction by noises
		Check and remedy	Canceled by turning OFF/ON the power. Check connectors and harness in the communication line. Replace the finisher control PWB or PCU PWB.

MAIN	SUB	Details	
F1	00	Content	Mail-bin stacker communication trouble
		Detail	Communication cable test error after turning on the power or exiting from SIM. Communication error with the Mail-bin stacker.
		Cause	Improper connection or disconnection of connector and harness between the machine and the Mail-bin stacker. Mail-bin stacker control PWB trouble Control PWB (PCU) trouble Malfunction by noises
		Check and remedy	Canceled by turning OFF/ON the power. Check harness and connector in the communication line. Replace the Mail-bin stacker PWB or PCU PWB.
	02	Content	Finisher transport motor abnormality
		Detail	Transport motor drive trouble
		Cause	Motor lock Drive abnormality Defective connection or disconnection between the PWB and the motor. Motor RPM abnormality Overcurrent to the motor Finisher control PWB trouble
		Check and remedy	Use SIM 3-3 to check the transport motor operation.
	02	Content	Mail-bin stacker transport motor abnormality
		Detail	Transport motor trouble
		Cause	Motor lock Drive abnormality Defective connection or disconnection between the PWB and the motor. Motor rpm abnormality Overcurrent to the motor Mail-bin stacker control PWB trouble
		Check and remedy	Use SIM3-21 to check the transport motor operation.
	03	Content	Console finisher paddle motor trouble
		Detail	Paddle motor operation abnormality
		Cause	Motor lock Motor rpm abnormality Overcurrent to the motor Console finisher control PWB trouble
		Check and remedy	Use SIM3-3 to check the motor operation.
	06	Content	Console finisher slide motor trouble
		Detail	Slide motor operation abnormality
		Cause	Motor lock Motor rpm abnormality Overcurrent to the motor Console finisher control PWB trouble
		Check and remedy	Use SIM3-3 to check the motor operation.

MAIN	SUB	Details	
F1	08	Content	Finisher staple shift motor trouble
		Detail	Staple motor drive trouble
		Cause	Motor lock Drive abnormality Defective connection or disconnection between the PWB and the motor. Home position sensor abnormality Motor rpm abnormality Finisher control PWB trouble
		Check and remedy	Use SIM3-3 to check operations of the staple motor.
	10	Content	Finisher stapler motor trouble
		Detail	Stapler motor operation abnormality
		Cause	Motor lock Defective connection or disconnection between the PWB and the motor. Home position sensor abnormality Motor rpm abnormality Overcurrent to the motor Console finisher control PWB trouble
		Check and remedy	Use SIM3-3 to check the motor operation.
	10	Content	Console finisher stapler motor trouble
		Detail	Stapler motor operation abnormality
		Cause	Motor lock Motor rpm abnormality Overcurrent to the motor Console finisher control PWB trouble
		Check and remedy	Use SIM3-3 to check the motor operation.
	11	Content	Finisher bundle exit motor trouble
		Detail	Bundle exit motor operation abnormality
		Cause	Motor lock Drive abnormality Defective connection or disconnection between the PWB and the motor. Home position sensor abnormality Motor rpm abnormality Console finisher control PWB trouble
		Check and remedy	Use SIM 3-3 to check the bundle exit motor operation and the paddle solenoid operation, or use SIM 3-2 to check the boomerang rotations sensor.
	11	Content	Console finisher bundle exit motor trouble
		Detail	Bundle exit motor operation abnormality
		Cause	Motor lock Motor rpm abnormality Overcurrent to the motor Console finisher control PWB trouble
		Check and remedy	Use SIM3-3 to check the motor operation.
	12	Content	Mail-bin stacker gate trouble
		Detail	Gate operation abnormality
		Cause	Gate lock Defective connection or disconnection between the PWB and the solenoid. Mail-bin stacker control PWB trouble
		Check and remedy	Use SIM3-21 to check the transport gate operation.

MAIN	SUB	Details	
F1	15	Content	Finisher lift motor trouble
		Detail	Lift motor operation abnormality
		Cause	Motor lock Motor rpm abnormality Overcurrent to the motor Finisher control PWB trouble
		Check and remedy	Use SIM3-3 to check the lift motor operation.
	15	Content	Console finisher lift motor trouble
		Detail	Lift motor operation abnormality
		Cause	Motor lock Drive abnormality Defective connection or disconnection between the PWB and the motor. Upper/lower limit sensor trouble Motor rpm abnormality Overcurrent to the motor Console finisher control PWB trouble
		Check and remedy	Use SIM3-3 to check the motor operation.
	19	Content	Finisher front alignment motor trouble
		Detail	Front alignment motor operation abnormality
		Cause	Motor lock Drive abnormality Defective connection or disconnection between the PWB and the motor. Home position sensor abnormality Motor rpm abnormality Finisher control PWB trouble
		Check and remedy	Use SIM3-3 to check the motor operation.
	19	Content	Console finisher front alignment motor trouble
		Detail	Front alignment motor operation abnormality
		Cause	Motor lock Motor rpm abnormality Overcurrent to the motor Console finisher control PWB trouble
		Check and remedy	Use SIM3-3 to check the motor operation.
	20	Content	Finisher rear alignment motor trouble
		Detail	Rear alignment motor operation abnormality
		Cause	Motor lock Drive abnormality Defective connection or disconnection between the PWB and the motor. Home position sensor abnormality Motor rpm abnormality Finisher control PWB trouble
		Check and remedy	Use SIM3-3 to check the motor operation.
	20	Content	Console finisher rear alignment motor trouble
		Detail	Rear alignment motor operation abnormality
		Cause	Motor lock Motor rpm abnormality Overcurrent to the motor Console finisher control PWB trouble
		Check and remedy	Use SIM3-3 to check the motor operation.

MAIN	SUB	Details	
F1	30	Content	Console finisher communication trouble
		Detail	Communication cable test error after turning on the power or exiting from SIM. Communication error with the console finisher
		Cause	Improper connection or disconnection of connector and harness between the machine and the console finisher. Console finisher control PWB trouble Control PWB (PCU) trouble Malfunction by noises
		Check and remedy	Canceled by turning OFF/ON the power. Check connectors and harness in the communication line. Replace the console finisher control PWB or PCU PWB.
	31	Content	Console finisher fold sensor trouble
		Detail	Sensor input value abnormality
		Cause	Sensor breakage harness breakage Console finisher control PWB trouble
		Check and remedy	Use SIM3-2 to check the sensor operation.
	32	Content	Communication trouble between the console finisher and the punch unit.
		Detail	Communication err between the console finisher and the punch unit.
		Cause	Improper connection or disconnection of connector and harness between the console finisher and the punch unit. Console finisher control PWB trouble Control PWB (PCU) trouble Malfunction by noise
		Check and remedy	Canceled by turning OFF/ON the power. Check connectors and harness in the communication line. Replace the console finisher control PWB.
	33	Content	Console finisher punch side registration motor trouble
		Detail	Punch side registration motor operation abnormality
		Cause	Motor lock Motor rpm abnormality Overcurrent to the motor Console finisher control PWB trouble
		Check and remedy	Use SIM3-3 to check the motor operation.
	34	Content	Console finisher punch motor trouble
		Detail	Punch motor operation abnormality
		Cause	Motor lock Motor rpm abnormality Overcurrent to the motor Console finisher control PWB trouble
		Check and remedy	Use SIM3-3 to check the motor operation.
	35	Content	Console finisher punch side registration sensor trouble
		Detail	Sensor input value abnormality
		Cause	Sensor breakage Harness disconnection Console finisher control PWB trouble
		Check and remedy	Use SIM3-2 to check the sensor operation.

MAIN	SUB	Details	
F1	36	Content	Console finisher punch timing sensor trouble
		Detail	Sensor input value abnormality
		Cause	Sensor breakage Harness disconnection Console finisher control PWB trouble
		Check and remedy	Use SIM3-2 to check the sensor operation.
	37	Content	Console finisher backup RAM trouble
		Detail	Backup RAM contents are disturbed.
		Cause	Console finisher control PWB trouble Malfunction by noise
		Check and remedy	Replace the console finisher control PWB.
	38	Content	Console finisher punch backup RAM trouble
		Detail	Punch unit backup RAM contents are disturbed.
		Cause	Punch control PWB trouble Malfunction by noise
		Check and remedy	Replace the punch control PWB.
	39	Content	Console finisher punch dust sensor trouble
		Detail	Punch dust sensor detection trouble
		Cause	When the punch dust sensor is not normally detected.
		Check and remedy	Sensor breakage Harness disconnection Punch control PWB trouble
	40	Content	Console finisher punch power interruption trouble
		Detail	When power interruption of the punch unit is detected
		Cause	Though 24V is supplied to the punch unit, the punch unit detects power interruption.
		Check and remedy	Harness disconnection Punch control PWB trouble
	80	Content	Finisher power abnormality
		Detail	The 24V power is not supplied to the finisher PWB.
		Cause	Improper connection or disconnection of connector and harness Finisher control PWB trouble Power unit trouble
		Check and remedy	Use SIM3-2 to check the sensor.
	80	Content	Mail-bin stacker power abnormality
		Detail	The 24V power is not supplied to the Mail-bin stacker PWB.
		Cause	Improper connection or disconnection of connector and harness Mail-bin stacker control PWB trouble Power unit trouble
		Check and remedy	Use SIM3-20 to check the sensor operation.
	81	Content	Console finisher transport motor abnormality
		Detail	Transport motor trouble
		Cause	Motor lock Motor rpm abnormality Overcurrent to the motor Console finisher control PWB trouble
		Check and remedy	Use SIM3-3 to check the motor operation.

MAIN	SUB	Details	
F1	87	Content	Finisher staple rotation motor trouble
		Detail	Front staple rotation motor trouble
		Cause	Motor lock Drive abnormality Defective connection or disconnection between the PWB and the motor. Home position sensor abnormality Motor rpm abnormality Overcurrent to the motor Finisher control PWB trouble
		Check and remedy	Use SIM3-3 to check the motor operation.
F2	00	Content	Toner control sensor open/sensor trouble
		Detail	Toner control sensor output open
		Cause	Connector harness trouble Connector disconnection Sensor trouble
		Check and remedy	Check connection of the toner control sensor. Check connection of connector and harness to the main PWB. Check for disconnection of harness. Replace the sensor.
	02	Content	Toner supply abnormality
		Detail	Toner control sensor output value becomes under-toner too earlier.
		Cause	Connector harness trouble Toner concentration sensor trouble Toner cartridge trouble
		Check and remedy	Check connection of the connector in the toner motor section. Check connection of connector and harness to the main PWB. Check for disconnection of harness. Toner concentration sensor output check SIM25-1. Replace the toner cartridge.
	04	Content	Improper cartridge (life cycle error, etc.)
		Detail	An improper process cartridge is inserted.
		Cause	IC chip trouble Improper cartridge
		Check and remedy	Insert a proper cartridge.
	05	Content	CRUM error
		Detail	Communication with IC chip cannot be made.
		Cause	IC chip trouble IC chip contact failure Improper cartridge
		Check and remedy	Insert a proper cartridge. Is the cartridge installed properly?
	39	Content	Process thermistor trouble
		Detail	Output value abnormality of the temperature sensor of temperature/humidity sensor
		Cause	Temperature/humidity sensor abnormality Temperature/humidity sensor harness connection failure PCU PWB trouble
		Check and remedy	Check connection of the harness and the connector of the temperature/humidity sensor. Replace the temperature/humidity sensor. Check PCU PWB.

MAIN	SUB	Details	
F2	58	Content	Process humidity sensor breakdown
		Detail	Process humidity sensor open or short
		Cause	Temperature/humidity sensor harness connection failure Temperature/humidity sensor abnormality PCU PWB trouble
		Check and remedy	Check connection of the harness and the connector of the temperature/humidity sensor. Replace the temperature/humidity sensor. Check PCU PWB.
F3	12	Content	Machine no. 1 tray lift-up trouble
		Detail	LUD does not turn ON in the specified time.
		Cause	LUD trouble No. 1 tray lift-up trouble Check connection of harness between the PCVU PWB, lift-up unit, and paper feed unit.
		Check and remedy	Check LUD, and their harness and connectors. Check the lift-up unit.
F3	22	Content	Machine tray 2 lift-up trouble
		Detail	MCLUD does not turn ON in the specified time.
		Cause	MCLUD trouble No. 2 tray lift-up motor trouble Harness disconnection f the PCU PWB, the lift-up unit, and the paper feed unit.
		Check and remedy	Check MCLUD, and their harness and connectors. Check the lift-up unit.
F6	00	Content	Communication trouble (ICU detection) between ICU and FAX
		Details	Communication establishment error/Fleming/Parity/Protocol error
		Cause	Slave unit PWB connector disconnection Harness abnormality between slave unit PWB and ICU PWB. Slave unit PWB mother board connector pin breakage Slave unit ROM abnormality/No ROM/Reverse insertion of ROM/ROM pin breakable
		Check & Remedy	Check connector harness between slave unit PWB and ICU PWB. Check grounding of machine. Check slave unit PWB ROM.
	01	Content	FAX expansion flash memory abnormality (ICU detection)
		Details	Flash memory cannot be deleted.
		Cause	Flash memory cannot be deleted.
		Check & Remedy	Check the FAX image storage Flash memory. Use SIM 66-10 to clear the flash memory.

MAIN	SUB	Details	
F6	04	Content	FAX modem operation abnormality
		Details	FAX PWB modem chip operation abnormality
		Cause	SW101 in the FAX PWB tries to perform normal operation on the boot side. Modem chip operation abnormality in FAX PWB
		Check & Remedy	Set SW101 on the FAX PWB to other than the boot side, and turn on the power again. Replace FAX PWB.
	20	Content	FAX write protect cancel
		Detail	The write protect JP is released.
		Cause	The write protect JP is set to “write allow.” FAX interface PWB trouble FAX PWB trouble
		Check and remedy	Check the write protect JP. Replace the FAX PWB. Replace the FAX interface PWB.
	21	Content	Combination abnormality of the TEL/LIU PWB and the FAX soft switch
		Detail	Combination abnormality of the TEL/LIU PWB and the FAX PWB information (soft switch) Or the TEL/LIU PWB is not a new one for new MDMC PWB.
		Cause	The destination of the installed TEL/LIU PWB differs. The FAX PWB information (soft switch) differs. TEL/LIU PWB trouble
		Check and remedy	Check the destination of the TEL/LIU PWB. Check the FAX PWB information (soft switch). Replace the TEL/LIU PWB.
	97	Content	FAX-BOX skating trouble The FAX-BOX PWB is not one for the AR-FX12. (FAX detection)
		Detail	The FAX-BOX MODEM controller is not one for the AR-FX12.
		Cause	The FAX-BOX Modem controller PWB information (hard detection) is not for the AR-FX12. (The Modem controller PWB for the AR-FX5 or the AR-FX6 is used.)
		Check and remedy	Check the FAX-BOX modem controller PWB. Replace it with a modem controller PWB for the AR-FX12.
	98	Content	Combination error of the FAX-BOX destination information and the machine destination information
		Detail	Combination error of the FAX-BOX destination information and the machine destination information
		Cause	Because of improper combination between the destination information stored in the EEPROM on the FAX-BOX PWB and that of the machine (set with SIM 26-6).
		Check and remedy	Check the destination of the FAX-BOX. Check the machine destination with SIM 26-6. Use a proper combination of the machine and the FAX-BOX.

MAIN	SUB	Details	
F7	01	Content	FAX board EEPROM read/write error
		Details	EEPROM access error (read/write)
		Cause	EEPROM trouble FAX PWB EEPROM access circuit trouble
		Check & Remedy	When replacing the EEPROM, use SIM66-4/5 (Signal send level) and SIM66-14/15/16 (Dial test) for adjustment. However, note that all the soft switches are reset to the initial values. No need to adjust when the PWB is replaced.
H2	00··· HL1 01··· HL2	Content	Thermistor open Fusing unit not installed
		Detail	Thermistor is open. (An input voltage of 2.92V or above is detected.) Fusing unit not installed
		Cause	Thermistor trouble Control PWB trouble Fusing section connector disconnection AC power trouble Fusing unit not installed
		Check and remedy	Check harnesses and connectors from the thermistor to the control PWB. Use SIM14 to clear the self diag display.
H3	00··· HL1 01··· HL2	Content	Fusing section high temperature trouble
		Detail	The fusing temperature exceeds 242°C. (An input voltage of 0.27V or above is detected.) Fusing temperature control is started, and 242°C is detected three or more times continuously in sampling in the specified interval. (Every 300msec)
		Cause	Thermistor trouble Control PWB trouble Fusing section connector disconnection AC power trouble
		Check and remedy	Use SIM5-2 to check the heater lamp **Blinking operation.** If the heater lamp blinks normally: Check the thermistor and its harness. Check the thermistor input circuit in the control PWB. **If the heater lamp keep lighting:** Check the AC PWB and the lamp control circuit in the control PWB. Use SIM14 to cancel the trouble

MAIN	SUB	Details	
H4	00··· HL1 01··· HL2	Content	Fusing section low temperature trouble
		Detail	The set temperature is not reached within the specified time (3 min) after turning on the power relay, or the temperature does not reach 80°C within 80 sec. When the heater lamp is not turned off in the specified time (3 min) from starting warm-up, or the temperature does not reach 80°C within 80 sec. After completion of warm-up operation, a temperature 50°C lower than the temperature control level is detected 5 times continuously in sampling in the specified interval. (every 300msec)
		Cause	Thermistor trouble Heater lamp trouble Control PWB trouble Thermostat trouble AC power trouble Interlock switch trouble
		Check and remedy	Use SIM5-2 to check the heater lamp **Blinking operation.** If the heater lamp blinks normally: Check the thermistor and its harness. Check the thermistor input circuit in the control PWB. **If the heater lamp does not light:** Check for heater lamp disconnection and thermostat disconnection. Check the interlock switch. Check the AC PWB and the lamp control circuit in the control PWB. Use SIM14 to cancel the trouble.
H5	01	Content	5-time continuous POD1 not-reaching jam detection
		Detail	5-time continuous POD1 not-reaching jam detection
		Cause	A fusing section jam is not properly removed. (Jam paper remains.) POD1 sensor trouble, or harness disconnection Improper installation of fusing unit
		Check and remedy	Check jam paper in the fusing section. (winding, etc.) Check POD1 sensor harness, and check the fusing unit installation. Use SIM14 to cancel the trouble.
L1	00	Content	Scanner feed trouble
		Details	Scanner feed is not completed within the specified time.
		Cause	Scanner unit abnormality Scanner wire disconnection
		Check & Remedy	Check scanning with SIM 1-1.
L3	00	Content	Scanner return trouble
		Details	Scanner return is not completed within the specified time.
		Cause	Scanner unit abnormality Scanner wire disconnection
		Check & Remedy	Check scanning with SIM 1-1.

MAIN	SUB	Details	
L4	01	Content	Main motor lock detection
		Detail	The motor lock signal is detected for 1.5sec during rotation of the main motor.
		Cause	main motor trouble Check connection of harness between the PCU PWB and the main motor. Control circuit trouble
		Check and remedy	Use SIM25-1 to check the main motor operation. Check harness and connector between the PCU PWB and the main motor.
	02	Content	Drum motor lock detection
		Detail	The motor lock signal is detected for 1.5sec during rotation of the drum motor.
		Cause	Drum motor trouble Improper connection of harness between the PCU PWB and the drum motor. Control circuit trouble
		Check and remedy	Use SIM6-1 to check the drum motor operation. Check harness and connector between the PCU PWB and the drum motor.
	30	Content	Controller fan motor lock detection
		Detail	The motor lock signal is detected during rotation of the controller fan motor. The motor lock signal is detected during rotation of the HDD fan motor.
		Cause	Fan motor trouble Improper connection of the harness between the controller PWB and the fan motor. Control circuit trouble
		Check and remedy	Use SIM 6-2 to check the fan motor operation. Check the harness and the connector between the controller PWB and the fan motor.
L6	10	Content	Polygon motor lock detection
		Detail	It is judged that the polygon motor lock signal is not outputted. Lock signal is checked in the interval of 10sec after starting the polygon motor, and it is judged that the polygon motor does not rotate normally.
		Cause	The LSU connector or harness in the LSU is disconnected or broken. Polygon motor trouble
		Check and remedy	Use SIM61-1 to check the polygon motor operation. Check connector and harness connection. Replace LSU.

MAIN	SUB	Details	
L8	01	Content	No fullwave signal
		Detail	Full wave signal is not detected.
		Cause	The PCU PWB connector or the power unit harness is disconnected or broken. PCU PWB trouble 12V power source trouble
		Check and remedy	Check connection of the harness and connector. Replace PCU PWB. Replace the power unit. Replace the controller connection mother board.
	02	Content	Full wave signal width abnormality
		Detail	It is judged as full wave signal frequency abnormality. (When the detection cycle is judged as 69Hz or above or 42.5Hz or below)
		Cause	The connector or harness of the PCU PWB and the power PWB is disconnected. PCU PWB trouble Power unit trouble
		Check and remedy	Check connection of the harness and connector. Replace the PCU PWB. Replace the power unit.
U1	01	Content	FAX battery abnormality
		Detail	FAX backup SRAM battery voltage fall
		Cause	Battery life Battery circuit abnormality
		Check and remedy	Check that the battery voltage is about 2.5V or above. Check the battery circuit.
	02	Content	RTC read abnormality (common with FAX, on ICU PWB)
		Details	The value read from RTC on ICU PWB is [EE]h (abnormal).
		Cause	RTC circuit abnormality Battery voltage fall Battery circuit abnormality
		Check & Remedy	Set the time again with key operation, and check that time advances properly. Check RTC circuit. Check that battery voltage is about 2.5V or above. Check battery circuit.
U2	00	Content	EEPROM read/write error (ICU)
		Detail	EEPROM write error
		Cause	EEPROM trouble EEPROM is not initialized. ICU PWB EEPROM access circuit trouble
		Check and remedy	Check that EEPROM is properly inserted. Save the counter/adjustment values with the simulation. Use SIM16 to cancel U2 trouble. Replace the ICU PWB.

MAIN	SUB	Details	
U2	11	Content	Counter check sum error (ICU)
		Detail	Counter data area check sum error
		Cause	EEPROM trouble Control circuit trouble by noise ICU PWB EEPROM access circuit trouble
		Check and remedy	Check that EEPROM is properly inserted. Save the counter/adjustment values with the DIAG simulation. Use DIAG (SIM16) to cancel U2 trouble. Replace the ICU PWB.
	12	Content	Adjustment value check sum error (ICU)
		Detail	Adjustment data area check sum error
		Cause	EEPROM trouble Control circuit trouble by noise ICU PWB EEPROM access circuit trouble
		Check and remedy	Check that EEPROM is properly inserted. Save the counter/adjustment values with the simulation. Use SIM16 to cancel U2 trouble. Replace the ICU PWB.
	22	Content	SRAM memory check sum error (ICU)
		Detail	MFPC section SRAM memory check sum error
		Cause	SRAM trouble Control circuit runaway due to noises ICU PWB SRAM access circuit trouble
		Check and remedy	Initialize the communication management table registered in the SRAM and the FAX soft switch. Since the registered data are deleted, register the data again. Use SIM16 to cancel U2 trouble. Replace the ICU PWB.
	23	Content	SRAM memory individual data check sum error (ICU)
		Detail	Check sum error for every data in the SRAM memory of the MFPC section (Communication management table, sender registration data, etc.)
		Cause	SRAM trouble Control circuit runaway due to noises ICU PWB SRAM access circuit trouble
		Check and remedy	Automatically initialize the data related to the check sum error by turning OFF/ON the power. Since the registered data are deleted, register the data again. Use SIM16 to cancel U2 trouble. Replace the ICU PWB.

MAIN	SUB	Details	
U2	50	Content	HD section individual data check sum error (ICU)
		Detail	Check sum error for every individual data in HD of the MFPC section (One-touch, Group, Program, etc.)
		Cause	HDD write/read error Control circuit runaway due to noises ICU PWB HD access circuit trouble
		Check and remedy	Automatically initialize the data related to the check sum error by turning OFF/ON the power. Since the registered data are deleted, register the data again. Use SIM 16 to cancel the U2 trouble. Replace the HD PWB. Replace the ICU PWB.
	80	Content	EEPROM read/write error (Scanner)
		Details	Scanner EEPROM write error
		Cause	EEPROM abnormality Scanner PWB EEPROM access circuit abnormality
		Check & Remedy	Check that EEPROM is set properly. Record counter/adjustment values with the simulation to protect the data from being deleted. Cancel U2 trouble with SIM 16. Replace scanner PWB.
	81	Content	Memory check sum error (Scanner)
		Details	Scanner memory check sum error
		Cause	EEPROM trouble EEPROM which is not initialized is installed. Control circuit freeze by noises Scanner PWB EEPROM access circuit trouble
		Check & Remedy	Check that EEPROM is set properly. Record counter/adjustment values with the simulation to protect the data from being deleted. Cancel U2 trouble with SIM 16. Replace scanner PWB.
	90	Content	EEPROM read/write error (PCU)
		Detail	PCU EEPROM write error
		Cause	EEPROM trouble PCU PWB EEPROM access circuit trouble
		Check and remedy	Check that EEPROM is properly inserted. Record counter/adjustment values with the simulation to protect the data from being deleted. Use SIM16 to cancel U2 trouble. Replace the Controller PWB.
	91	Content	Memory check sum error (PCU)
		Detail	PCU memory check sum error
		Cause	EEPROM trouble EEPROM which is not initialized is installed. EEPROM is not initialized. PCU PWB EEPROM access circuit trouble Hang of control circuit due to noises
		Check and remedy	Check that EEPROM is properly inserted. Save the counter/adjustment values with the simulation. Use SIM16 to cancel U2 trouble. Replace the Controller PWB.

MAIN	SUB	Details	
U6	00	Content	Desk/LCC communication trouble
		Detail	Desk/LCC communication error Communication cable test error after turning on the power or exiting SIM.
		Cause	Improper connection or disconnection of connector and harness Desk control PWB trouble Control PWB (PCU) trouble Noise or interference
		Check and remedy	Canceled by turning OFF/ON the power. Check connection of the harness and connector in the communication line.
	01	Content	Desk/LCC No. 1 tray lift-up trouble
		Detail	Desk/LCC No. 1 tray lift-up trouble
		Cause	Sensor trouble Tray trouble Defective connection or disconnection between the PWB and the motor. Desk control PWB trouble Lift-up motor trouble
		Check and remedy	Use SIM4-2 to check the upper limit sensor detection. Use SIM4-3 to check the lift-up motor operation.
	02	Content	Desk No. 2 tray/LCC1 lift-up trouble
		Detail	Desk No. 2 tray/LCC lift-up trouble
		Cause	Sensor trouble Tray trouble Defective connection or disconnection between the PWB and the motor. Desk control PWB trouble Lift-up motor trouble
		Check and remedy	Use SIM4-2 to check the upper limit sensor detection. Use SIM4-3 to check the lift-up motor operation.
	03	Content	Desk No. 3 tray/LCC2 lift-up trouble
		Detail	Desk no. 3 tray lift-up trouble
		Cause	Sensor trouble Tray trouble Defective connection or disconnection between the PWB and the motor. Desk control PWB trouble Lift-up motor trouble
		Check and remedy	Use SIM4-2 to check the upper limit sensor detection. Use SIM4-3 to check the lift-up motor operation.
	10	Content	Desk/LCC transport motor trouble
		Detail	Desk/LCC transport motor operation trouble
		Cause	Motor lock Drive abnormality Defective connection or disconnection between the PWB and the motor. Motor rpm abnormality Overcurrent to the motor Desk control PWB trouble
		Check and remedy	Use SIM4-3 to check the transport motor operation.

MAIN	SUB	Details	
U7	00	Content	RIC communication trouble
		Detail	RIC communication trouble Communication cable test error after turning on the power or exiting SIM.
		Cause	Disconnection of connector and harness RTC control PWB trouble Control PWB (ICU) trouble Noise or interference
		Check and remedy	Canceled by turning OFF/ON the power. Check connector and harness in the communication line.
EE	EL	Content	Auto developer adjustment trouble (Over-toner)
		Detail	The toner concentration output is detected as 1.5V or below in the auto development adjustment.
		Cause	Toner concentration sensor trouble Charging voltage, developing voltage abnormality Insufficient toner concentration Developing unit trouble PCU PWB trouble
		Check and remedy	Use SIM25-2 to perform auto developer adjustment.
	EU	Content	Auto developer adjustment trouble (Under-toner)
		Detail	The toner concentration output is detected as 3.5V or above in the auto development adjustment.
		Cause	Insufficient toner concentration Charging voltage, developing voltage abnormality Insufficient toner concentration Developing unit trouble PCU PWB trouble
		Check and remedy	Use SIM25-2 to perform auto developer adjustment.
PF	00	Content	RIC copy inhibit signal is received.
		Detail	Copy inhibit command from RIM (host) is received.
		Cause	Judged by the host.
		Check and remedy	Inform to the host.
CE	00	Content	Another communication error occurs.
		Detail	Communication error
		Cause	Improper connection of the network cable
		Check and remedy	Check the connection of the network cable.
	01	Content	The print server card is broken down or is not installed.
		Detail	Print server card connection trouble
		Cause	The print server card is not installed on the controller. Print server card control PWB trouble
		Check and remedy	1. Check that the print server card is installed on the controller. 2. Output the NIC Config. Page to check the NIC version. 3. Replace the NIC.

MAIN	SUB	Details	
CE	02	Content	The specified mail server or FTP server is not found.
		Detail	The specified mail server or the FTP server is not found.
		Cause	Improper connection of the network cable Network setup trouble An error occurs in the SMTP server/ FTP server/ NTS.
		Check and remedy	1. Check that the network cable is properly connected. 2. Check that the connected network supports TCP/IP protocol. 3. Check from the web page that the address of the FTP server or the desktop PC is properly set as the primary/secondary e-mail server address. 4. When the above address is described with the Hostname, check that the DNS server is properly set or not. 5. Check the SMTP server/ FTP server/ NTS for any trouble.
	03	Content	The specified server suspends response during transmission of images.
		Detail	The specified server suspends response during transmission of images.
		Cause	Improper connection of the network cable An error occurs in the SMTP server/ FTP server/ NTS.
		Check and remedy	1. Check that the network cable is properly connected. 2. Check the SMTP server/ FTP server/ NTS for any trouble.
	04	Content	The account name or the password for the FTP server is invalid.
		Detail	The entered account name of the FTP server or the password for authentication is invalid.
		Cause	Improper connection of the network cable Improper registration of the account name or improper password registered in the FTP server as the destination
		Check and remedy	1. Check that the network cable is properly connected. 2. Check the account name or the password registered in the FTP server as the destination.
	05	Content	The directory of the FTP server is invalid.
		Detail	The entered directory of the FTP server is invalid.
		Cause	Improper connection of the network cable Check for existence of the directory name in the FTP server registered as the destination.
		Check and remedy	1. Check that the network cable is properly connected. 2. Check for existence of the directory name in the FTP server registered as the destination.

MAIN	SUB	Details	
CE	06	Content	The specified mail server (POP3) is not found.
		Detail	The specified mail server (POP3) is not found. POP3 server access error
		Cause	Improper connection of the network cable Network setup trouble An error occurs in the POP3 server.
		Check and remedy	1. Check connection of the network cable. 2. Check that the connected network supports TCP/IP protocol. 3. Check on the Web page that the POP3 server address is correctly set. 4. When the above address is described with the Hostname, check that the DNS server is properly set or not. 5. Check for any error in the POP3 server.
	07	Content	The entered account name of the POP3 server or the password for authentication is invalid.
		Detail	The entered account name of the POP3 server or the password for authentication is invalid. POP3 server authentication check error
		Cause	Improper connection of the network cable Improper account name or password registered in the POP3 server
		Check and remedy	1. Check connection of the network cable. 2. Check that the account name or the password registered for the POP3 server is correct.
	08	Content	The specified mail server (POP3) is not found.
		Detail	The specified mail server (POP3) is not found. POP3 server time out error
		Cause	Improper connection of the network cable An error occurs in the POP3 server.
		Check and remedy	1. Check connection of the network cable. 2. Check for any error in the POP3 server.

4. Other related items

(1) Self diag operation

The machine always monitors its own status. When it detects any abnormality or a status which requires warning, it performs the self diag operation to display the trouble or warning message as follows:

Warning	Content	This message is displayed to warn mainly the user to inform that a consumable part is near life, etc. It is no direct relation with machine troubles.
	Machine operation	The machine operation may be stopped and may be not.
	Message clear	The message may be automatically cleared by replacement or supply of the consumable part, or may be cleared by the specified simulation operation.
Trouble	Content	This message is a trouble message related to a machine trouble.
	Machine operation	The machine operation is stopped.
	Message clear	This message may be automatically cleared by repairing the trouble, or may be cleared by the specified simulation operation.

(2) Power ON trouble detection function

- When the power is turned on, if the stored trouble is H3, H4, H5, U1, U2, PF, or U6 (sub code 2, 3), it is immediately judged as a trouble.

∗ E7-50 and 60 are not judged as a storing trouble, (Detected every time when the power is turned on.)

Trouble code	Storing	Trouble cancel command simulation
H3, H4, H5	PCU	SIM 14
U1	ICU	SIM 13
U2	Each block	SIM 16
PF	ICU	SIM 17
U6-2, 3	PCU	SIM 15

(3) Basic flow of countermeasures

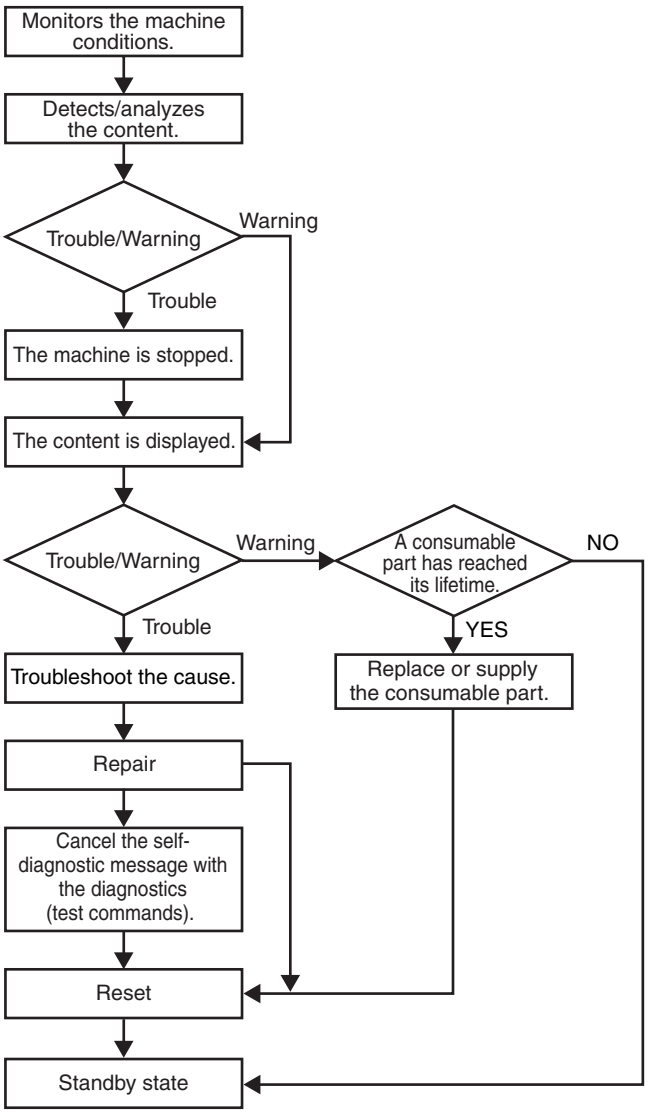

(4) List of trouble modes

● Troubles where the machine can be operated under some conditions

When a trouble occurs, the dialogue is displayed and OK button is added to the trouble message.

Trouble content	Judgment block	Trouble code	Operation enable mode						
			Copy read (including interrupt)	FAX send	Email receive	FAX print	Print	List print	Notification to FASThost
Scanner section breakdowns (Mirror motor, lens, copy lamp)	Scanner	L1, L3, U2 (80, 81)	×	×	×	❍	❍	❍	❍
FAX board breakdown	ICU/FAX	F6, F7	❍	×	❍	×	❍	❍	×
FAX power OFF	ICU		❍	×	❍	×	❍	❍	×
Network error	ICU	CE	❍	❍	×	❍	❍	❍	×
Staple breakdown	PCU	F1 (10)	Δ2	❍	❍	Δ2	Δ2	Δ2	❍
Paper feed tray breakdown	PCU	F3, U6 (LCC)	Δ3	❍	❍	Δ3	Δ3	Δ3	❍
PCU section breakdowns (Motor, fusing section, etc.)	PCU	C1, C2, C3, H2, H3, H4, H5, L4 (excluding L4-30), L8, U2 (90, 91), F2	×	❍	❍	×	×	×	❍
After-process breakdown	PCU	F1	Δ5	❍	❍	Δ5	Δ5	Δ5	❍
Laser breakdown	PCU	E7 (02 only), L6	×	❍	❍	×	×	×	❍
HDD breakdown	ICU	E7 (03)	×	×	×	×	×	×	❍
CCD breakdowns (Shading, etc.)	Scanner	E7 (10, 11, 14)	×	×	×	❍	❍	❍	❍
CIS breakdowns (Shading, etc.)	Scanner	E6 (10, 11, 14)	Δ6	Δ6	Δ6	❍	❍	❍	❍
Scanner communication trouble	ICU	E7 (80)	×	×	×	❍	❍	❍	❍
PCU communication trouble	ICU	E7 (90)	×	×	×	×	×	×	❍
FAX backup battery voltage fall	ICU	U1 (01, 02)	❍	×	×	❍	❍	❍	❍
HDD registration data sum error	ICU	U2 (50)	❍	×	×	❍	❍	❍	❍
Thermistor trouble (trouble history)	PCU	F2 (39, 58)	❍	❍	❍	❍	❍	❍	❍

● Troubles where the machine cannot be operated

When a trouble occurs, the dialogue is displayed. OK button is not added to the trouble massage, and only setting can be performed. The message remains displayed until the trouble is canceled.

Trouble content	Judgment block	Trouble code	Operation enable mode						
			Copy read (including interrupt)	FAX send	Email receive	FAX print	Print	List print	Notification to FASThost
Memory	ICU	U2 (00, 11, 12, 22, 23)	×	×	×	×	×	×	❍
External communication disable (RICA)	ICU	U7, PF	×	×	×	×	×	×	❍
Image memory trouble, decode error	ICU	E7 (01, 06)	×	×	×	×	×	×	❍
Skating check error	ICU/PCU	E7 (50, 60)	×	×	×	×	×	×	×
Controller fan motor trouble	ICU	L4-30	×	×	×	×	×	×	×

∗ For FAX communication, refer to the “(5) Communication specification when a trouble occurs.”

∗ The machine may be operated under some conditions.

Δ1: When detected except when in a job, the machine can be operated in the OC mode.

Δ2: Can be operated except in the staple mode.

Δ3: When detected except in a job, the machine can be operated except with the breakdown tray.

Δ4: Can be operated with some restriction on the image quality depending on the destination. (Low density print)

Δ5: When detected except in a job, can be operated except in the trouble paper exit section.

Δ6: When detected except in a job, can be operated in the single surface scan mode.

(5) Communication specification when a trouble occurs

The image send/receive specifications when a trouble occurs are as shown below.

Trouble	Send reservation	Print	FAX call request	FAX call-in	LAN send	LAN receive	Precaution
PCU breakdowns (Excluding C1, C2, C3, H2, H3, H4, H5, L4, L8, U2-90, U2-91, and skating check error)	❍	×	❍	❍ Note	❍	❍ Note	There is a risk that the memory is full.
Scanner breakdowns (L1, L3, U2-80, U2-81)	×	❍	❍	❍	❍	❍	
F6, F7 (FAX breakdown)	×	❍	×	×	❍	❍	
F1 (Paper exit section breakdown)	❍	Δ4	❍	❍	❍	❍	
F3, U6 (Paper feed tray breakdown)	❍	Δ2	❍	❍	❍	❍	
E7 (01, 06) (ICU breakdown)	×	×	×	×	❍	❍	
E7-02 (Laser breakdown)	❍	×	❍	❍ Note	×	❍ Note	There is a risk that the memory is full.
E7-03 (HD breakdown)	×	×	×	×	×	×	
E7 (10, 11, 14) (CCD breakdown)	×	❍	❍	❍	❍	❍	
E6 (10, 11, 14) (CIS breakdown)	Δ6	❍	❍	❍	❍	❍	
E7-80 (Scanner communication trouble)	×	❍	❍	❍	❍	❍	
E7-90 (PCU communication trouble)	×	×	×	×	×	×	
E7 (50, 60) (Skating check error)	×	×	×	×	×	×	
U2 (00, 11, 12, 22) (ICU memory error)	×	×	×	×	×	×	
U2 (22, 23) (SRAM check sum error)	×	×	×	×	×	×	
U2-50 (HD check sum error)	×	×	×	×	×	×	
U7 (RIC external communication disable), PF	×	×	×	×	×	×	Inhibition of use by a customer having outstanding fee
U1 (Backup battery voltage fall)	×	Δ3	× Note	×	× Note	×	Transfer enable
L4-30 (Controller fan motor trouble)	×	×	×	×	×	×	
Door open	❍	×	❍	❍Note	❍	❍ Note	There is a risk that the memory is full.
Toner empty	❍	×	❍	❍Note	❍	❍ Note	There is a risk that the memory is full.
Process cartridge uninstalled, etc.	❍	×	❍	❍Note	❍	❍ Note	There is a risk that the memory is full.
Paper empty	❍	×	❍	❍Note	❍	❍ Note	There is a risk that the memory is full.
Paper JAM	❍	×	❍	❍Note	❍	❍ Note	There is a risk that the memory is full.
Document JAM	×	❍	❍	❍	❍	❍	
Simulation	×	×	×	×	×	×	
Key operation (Communication disable)	×	×	×	×	×	×	

Δ2: Enable except for the trouble tray

∗ When, however, a paper feed tray trouble is detected during a job, the engine is stopped and printing is disabled.

Δ3: The display goes to the FAX status check menu and the list can be printed.: The received document is outputted.

Δ4: Paper exit is enabled except for the trouble paper exit tray

∗ When, however, a paper feed tray trouble is detected during a job, the engine is stopped and printing is disabled.

Δ5: Only the operation related to image quality can be executed depending on the destination. (low density print)

Δ6: The operation can be executed in the single surface scanning mode.

(6) Writing to the trouble memory

In case of a same trouble in this machine, selection is made with the simulation to write into the trouble memory or not. If this simulation is set, any trouble is written into the trouble memory unconditionally.

(SIMULATION. 26-35)

0: A same trouble as the previous one is not written. (Default)

1: Any trouble is written into the trouble memory unconditionally.

[12] ROM VERSION-UP METHOD

1. General

Firmware update is executed by collectively writing the files with each ROM inserted to its specified slot.

If update by collective writing is failed by power interruption during the update process, etc., insert a preliminary ROM into the controller PWB and make update for each ROM individually. The update process flow in such a case is shown in “G. Update process flow.”

The files for update can be transferred from a PC in which printer setting is made (regardless of Centro, USB, or TCP/IP connection type) to the printer by the use of File2PRN.EXE described later. In the other cases, use FCOPY.EXE to transfer the files.

2. Cautions

- In this method, verify for each byte is not made in order to shorten the writing time. The reliability of writing is assured by comparing the sum value. If the operation should be abnormal, make updater (C.) by the controller PWB.
- When the power is turned off during writing, the process may be failed and the machine may not be booted.
  In this case, refer to “E. Power OFF during update.”
- After completion of update, the update window may be displayed by resetting the DIP switch on the controller PWB and booting the machine normally. In this case, the PCU and the scanner may not have been updated normally. Refer to “F. Update window when normal booting.”
- It takes a longer time (about 5 minute) to write to the PWB’s on the PCU, the scanner, and the FAX ROM than to write by CN6 of the controller PWB. This is because the difference in the communication speeds of the PWB’s, etc. Also when the version of the software which is updated is the same, the process may be completed quickly.

3. Flash ROM update procedures

A. Preliminary arrangement

(1) Necessary tools

1) A machine with the operating ROM in it
2) A spare PCU ROM, a controller boot ROM, a scanner ROM (which operate normally) (Used when writing is failed.)
3) A PC operating on Windows with a USB or a parallel port. (When File2PRN is used, it must be set as a printer.)
4) USB cable or Centronics cable (Used to connect the PC and the controller PWB.)
5) File2PRN.EXE (Used to transfer the files to the machine connected with the USB, network, or parallel port. For the network connection, IP address setting is required. However, it is not mentioned here.), or FCOPY.EXE (parallel port file transfer tool). For the operating procedures of them, refer to <Reference> described later.
6) Compression files for update (SFU files for each of the PCU, the scanner, the FAX, the controller boot ROM and the MAIN ROM, or the collective SFU file)

(2) DIP switch setting on the back of the machine

When updating the ROM, the DIP switches on the back of the machine must be set properly.

a) DIP switches

As shown in the figure below, remove the screw marked with (*) on the controller PWB at the back of the machine and rotate the plate part, and the DIP switch will appear.

ON the back of the machine, there are following DIP switches from the controller PWB:

- Diag mode switch (on the left)
- Write protect switch (on the right)

The switches are set to the upper side (protect) in normal operation. When they are set to the lower side, the diag mode and write protect are released. (Refer to the figure below.) When writing each ROM, set the switches to the lower side. (Default: Upper side). Return the plate part which covers the DIP switch to the original position, and tighten the screw again.

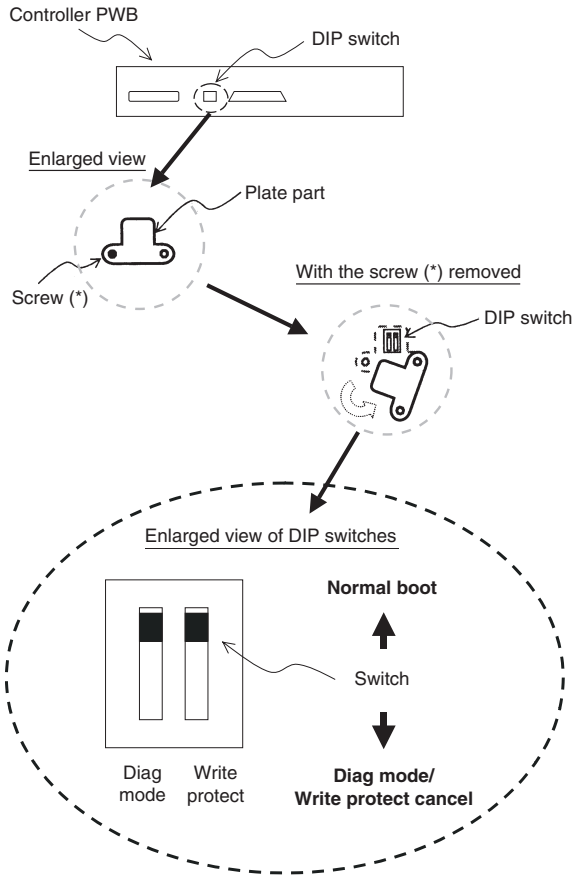

(3) Controller PWB slot

The Flash Rom slots of the controller PWB are CN4, CN5, and CN6. Normally the BOOT ROM is inserted to CN4, and the main ROM is inserted to CN5, and CN6 is empty. When, however, the controller PWB is used to make a ROM, CN6 is used.

(4) Operation panel

When the machine is booted by the diag mode, each operation is performed with the hard keys of the scanner. The window display is made by the LCD panel. The keys used in the diag mode are assigned as follows:

START key	→	OK key
Print (Document filing) key	→	Up/Down select key
FAX/Image send key	→	Up/Down select key
Job status key	→	Menu key
Clear key	→	BACK key

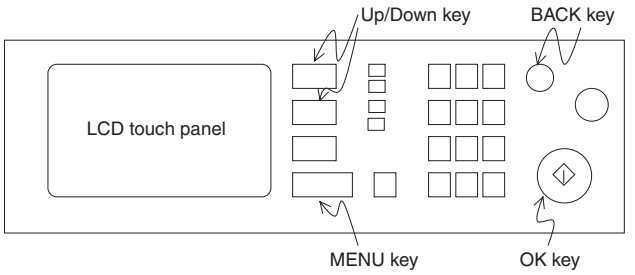

B. Update procedure 1 (Writing with each ROM inserted to the specified slot)

In this case, the ROM's on the PCU, FAX, and the scanner must be operating ROM's. An empty ROM which cannot boot the machine cannot be used for writing.

(1) Preparation

1) Set the DIP switches on the back of the machine to the diag mode (lower side) and the write protect switch to the release side (lower side).
2) Check to confirm that the scanner unit is connected with the machine.
3) Check to confirm that the FAX unit is connected with the machine. (When the FAX is installed.)
4) Connect the PC and the controller PWB with the Centronics cable or USB cable.
5) Turn on the power of the PC and the machine to be updated.

(2) Update procedures

1) When the machine is booted, the following display is shown.

```
Version Check
CONF: *********
```

2) Press MENU key a few times to display the following window. (In addition, when File2PRN.EXE is used, select the connection type (USB or parallel) with the Up/Down select key.)

```
Firm Update
From Parallel
```

3) Press OK key, and the following window is displayed.

```
Firm Update
Waiting Data
```

4) When files are transferred from the PC by Fcopy.EXE or File2PRN.EXE (collective files or a separate file for each ROM), the LED flashes and the display is changed sequentially as shown below. When the scanner is updated, the backlight of the LCD is instantaneously turned off. Since it is not a breakdown, do not turn off the power but wait for a while. When "Result: OK" is displayed after completion of writing (several minutes), press Up/Down key to check that there is no "Result: NG" for each ROM. (When, however, the collective files are updated with the machine which has no FAX installed, "Result: NG" is displayed for FAX.) When "Result: NG" is displayed, refer to (D.).

```
Firm Update   ***
Receiving Data
```

↓

```
Firm Update
Writing Data
```

↓

```
Firm Update   ***
 Result: OK
```

5) Reboot the machine, and use Up/Down key on the window of 1) to check to confirm that the version of the updated software has been updated.
6) Turn off the power, and reset the DIP switches to the upper side (normal side).

C. Update procedures 2 (Writing to each ROM by use of CN6 of the controller PWB)

By use of an empty slot of the controller PWB, writing can be made to an empty ROM which is not operating.

(1) Preparation

1) Set the DIP switch on the back of the machine to the diag mode (lower side), and set the write protect switch to the release side (lower side).
2) Insert one of the ROM's of the PCU, the SCN, and the FAX into the empty slot (CN6) of the controller PWB.
3) Check to confirm that the scanner unit is connected with the machine.
4) Check to confirm that the FAX unit is connected with the machine. (When the FAX is installed.)
5) Connect the PC and the controller PWB with the Centronics cable or USB cable.
6) Turn on the power of the PC and the machine to be updated.

(2) Update procedures

1) When the machine is booted, the following window is displayed.

```
Version Check
CONF: *********
```

2) Press MENU key a few times to display the following window. (In addition, when File2PRN.EXE is used, press Up/Down key to select the connection type (USB or parallel).)

```
CN Update
 From Parallel
```

3) Press OK key, and the following window is displayed.

```
CN Update
 Waiting Data
```

4) When files are transferred from the PC by the use of Fcopy.EXE or File2PRN.EXE, the data LED flashes and the window is changed sequentially as follows. The LED finishes flashing in a few minutes, and "Writing: OK" is displayed.

```
CN Update
 Receiving Data
```

5) Press OK key, and the following window is displayed.

```
CN Update ***-> CN5
 Writing OK?
```

6) Use Up/Down key to select the slot No. to which the ROM is inserted, and press OK key. The LED flashes and the window is changed sequentially as shown below. After completion of writing (several minutes), check to confirm that "Result: OK" is displayed.

```
CN Update ***-> CN6
 Writing Data
```

↓

```
CN Update ***-> CN6
 Result: OK
```

7) After turning off the power, replace the ROM to which writing is made with the ROM of the specified slot of the PWB, and turn on the power and check the operation and the version. (Use Up/Down key to check on the window of 1).)
8) Turn off the power, and reset the DIP switches to the upper side (protect side, normal side).

D. In case of “Result: NG”

(1) Possible causes of “Result: NG”

There are following possible causes of “Result: NG.”

1) The DIP switch of write protect is not set properly.
   - The write protect switch of the controller PWB is not set to the release side (lower side).

   → If the write protect switch is not set to the release side, data are not written into the ROM. Set the DIP switch properly, and retry updating.

2) The FAX cable is not connected. The FAX is NG.

   → Writing is not made. Connect properly and retry writing.

3) In rare cases, the ROM is broken down.

   → Check the ROM, and retry writing. If the trouble remains, replace the ROM.

   (* There are three types of ROM device: the common type for the PCU and the scanner, the common type for BOOT and MAIN, and the exclusive type for FAX.)

E. Turning off the power during update

When the power is turned off during the update process, though the machine is booted, data writing cannot be assured. Retry update as follows.

1) When the power is turned off during update process of (B.)

   Retry the update procedure of (B.). If the machine is not booted or the hard keys are not invalid (**), or retry of the update is failed again, replace the ROM’s with the spare one of the PCU, the controller BOOT, and the scanner ROM, and try the update procedure of (C.) for the replaced ROM’s.
   (** When the backlight of the display is lighted but the hard keys are invalid, all LED’s flash.)

2) When the power is turned off during update process of (C.)

   Retry updating.

F. Update window display in normal booting

After completion of updating, when the power is turned off and the DIP switches on the back of the machine are set to the normal side and the machine is booted, the update window is displayed as shown below instead of the normal boot window, the PCU or the scanner may not have been properly updated.

```
Version Check
CONF: *********
```

At that time, use Up/Down key to check the version of the PCU or the scanner. If the version is displayed as “BootMode,” or if the key operation is invalid (all the LED’s are flashing), retry updating as follows.

1) When the key operation is possible and the version is displayed as “BootMode”

   Turn off the power and retry the update procedure of (B.). At that time, be sure to set the DIP switches properly. After updating again, if the result is still NG, replace the ROM’s with the spare one of the PCU and the scanner ROM, and perform the update procedure of (C.) for the replaced ROM's.

2) When the key operation is invalid

   Turn off the power and replace the ROM’s with the spare one of the PCU and the scanner ROM, and perform the update procedure of (C.) for the replaced ROM’s. Be sure to set the DIP switches properly.

G. Update process flow

The brief descriptions on the update procedures are as follows. For turning off during update, refer to “E. Turning off the power during update.”

If the update window is displayed after booting with the DIP switches on the back of the machine set to the normal side, refer to “F. Update window display in normal booting.”

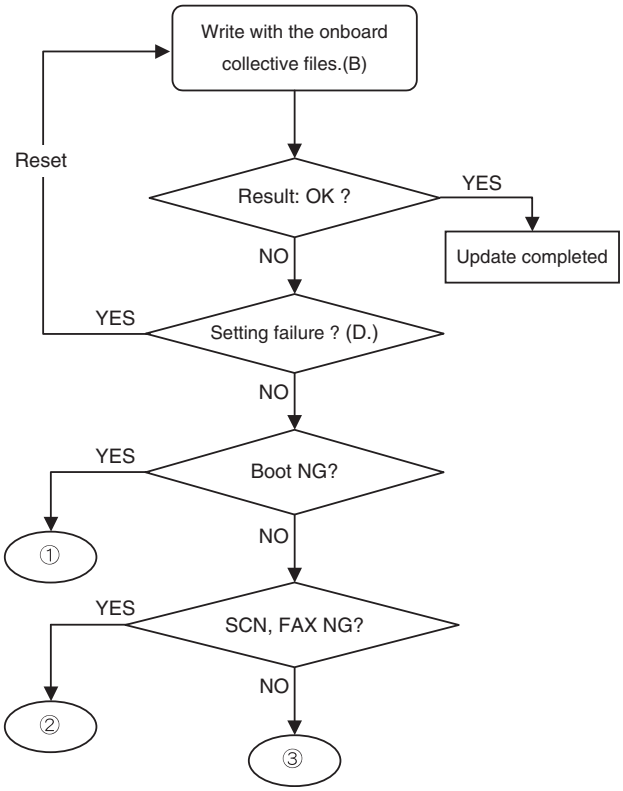

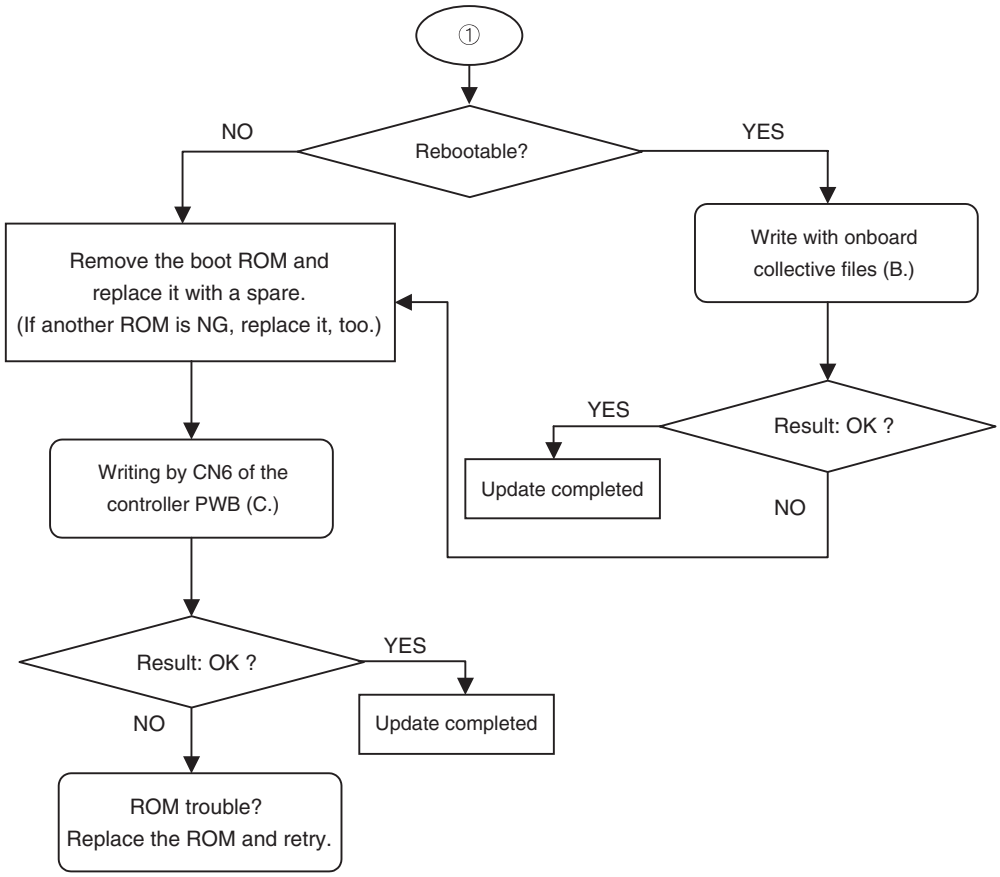
①
Rebootable?
NO
YES
Remove the boot ROM and replace it with a spare. (If another ROM is NG, replace it, too.)
Write with onboard collective files (B.)
Result: OK ?
YES
Update completed
NO
Writing by CN6 of the controller PWB (C.)
Result: OK ?
YES
Update completed
NO
ROM trouble? Replace the ROM and retry.

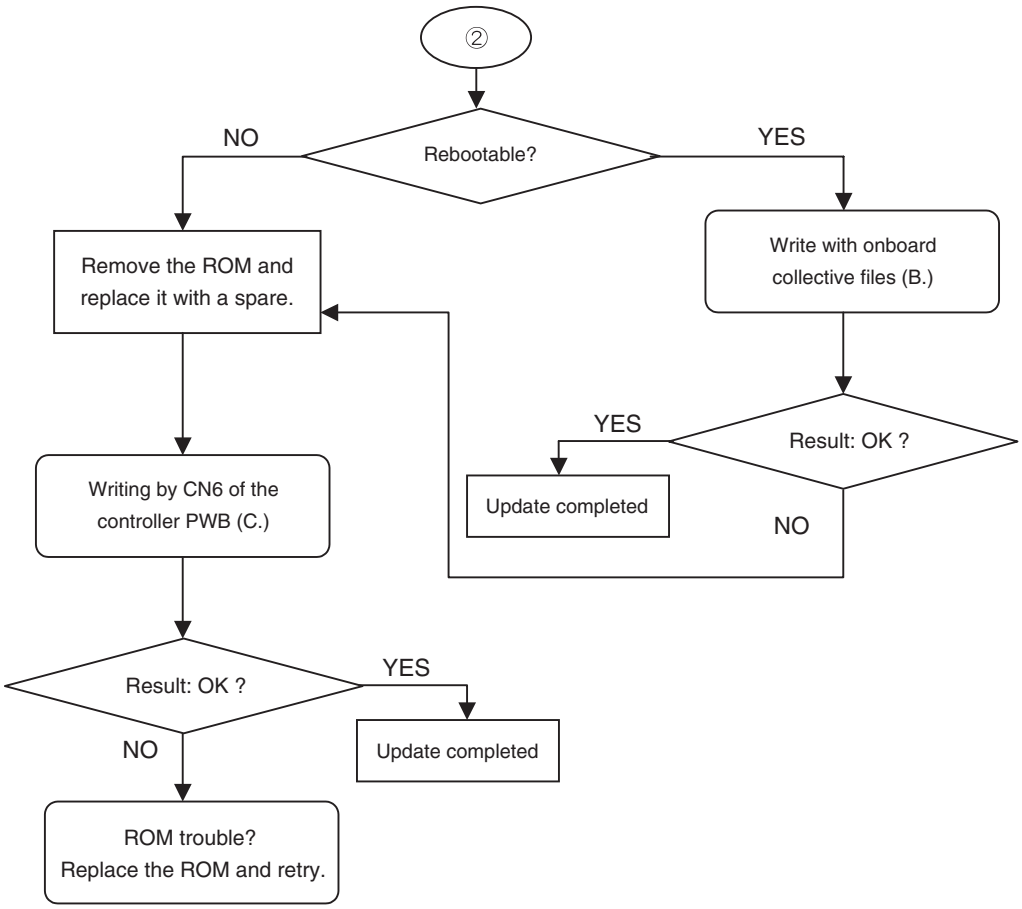
②
Rebootable?
NO
YES
Remove the ROM and replace it with a spare.
Write with onboard collective files (B.)
Result: OK ?
YES
Update completed
NO
Writing by CN6 of the controller PWB (C.)
Result: OK ?
YES
Update completed
NO
ROM trouble? Replace the ROM and retry.

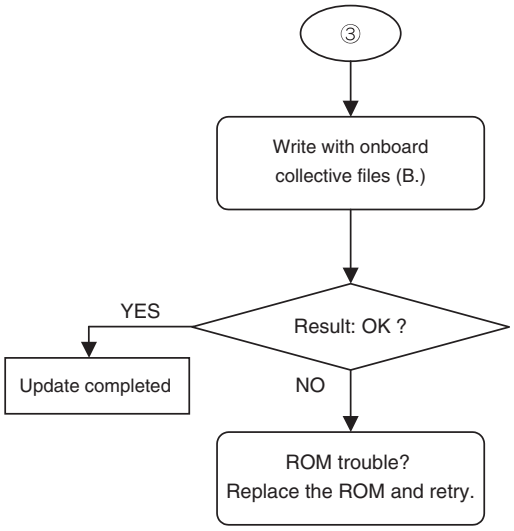

<Reference> File transfer procedures

(1) File transfer by Fcopy.EXE

For file transfer by Fcopy, put Fcopy.exe and the files in a same directory, and boot the MS-DOS. Go to the directory of the files, and type "Fcopy file name" and transfer is made. In the following case, the SFU file is in the C:\ROM directory and it is transferred.

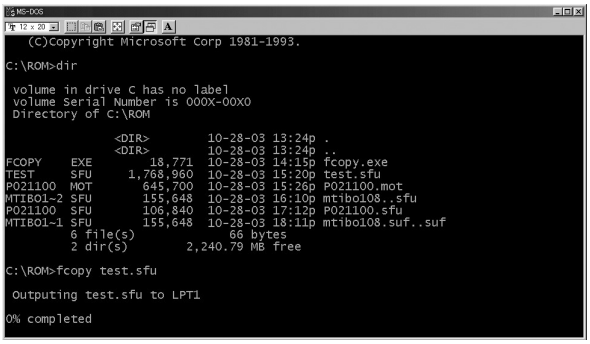

(2) File transfer by File2PRN.EXE

For file transfer by File2PRN, the machine to which the files are transferred must be set as a printer. The connection types as a printer are parallel port, network, and USB. For transfer by the network connection, IP address setting is required. It is not described here. For transfer of the files, execute File2PRN.EXE, and the following window is displayed.

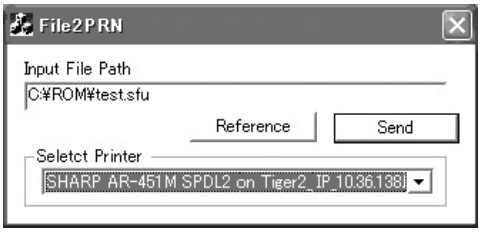

Enter the path of the transfer file to "Input File Path." (Or press Reference button and select a file to be transferred.) Then select the target printer in "Select Printer." Select a parallel port connection printer or a USB connection printer depending on the connection type. After completion of the above transfer file selection and the target printer setting, press Send button to transfer the file.

For the file transfer by USB connection, refer to "<Reference> (3) File transfer by USB connection."

(3) File transfer by USB connection

When update is made by File2PRN and USB connection, USB is used as a printer port similar to the other connections (parallel, network).

[Setup]

1) Set the machine as a printer which is connected to the PC in a connection type other than USB.
2) Boot the machine in the diag mode conforming to the normal ROM update procedures.
3) Connect the PC and the machine with the USB cable.
4) The PC system detects a new hardware by Plug & Play function.
5) The driver of SHARP AR-M455N is automatically installed. (Note that the model name is displayed as SHARP AR-M455N regardless of the actual model name.)
6) Follow the normal ROM update procedures to bring the machine into the data reception status.
7) Execute File2PRN, specify the printer registered in procedure 7), and execute file transfer.

(Example: SHARP AR-M455N SPDL2 on USB001)

[13] ELECTRICAL SECTION

1. Block diagram

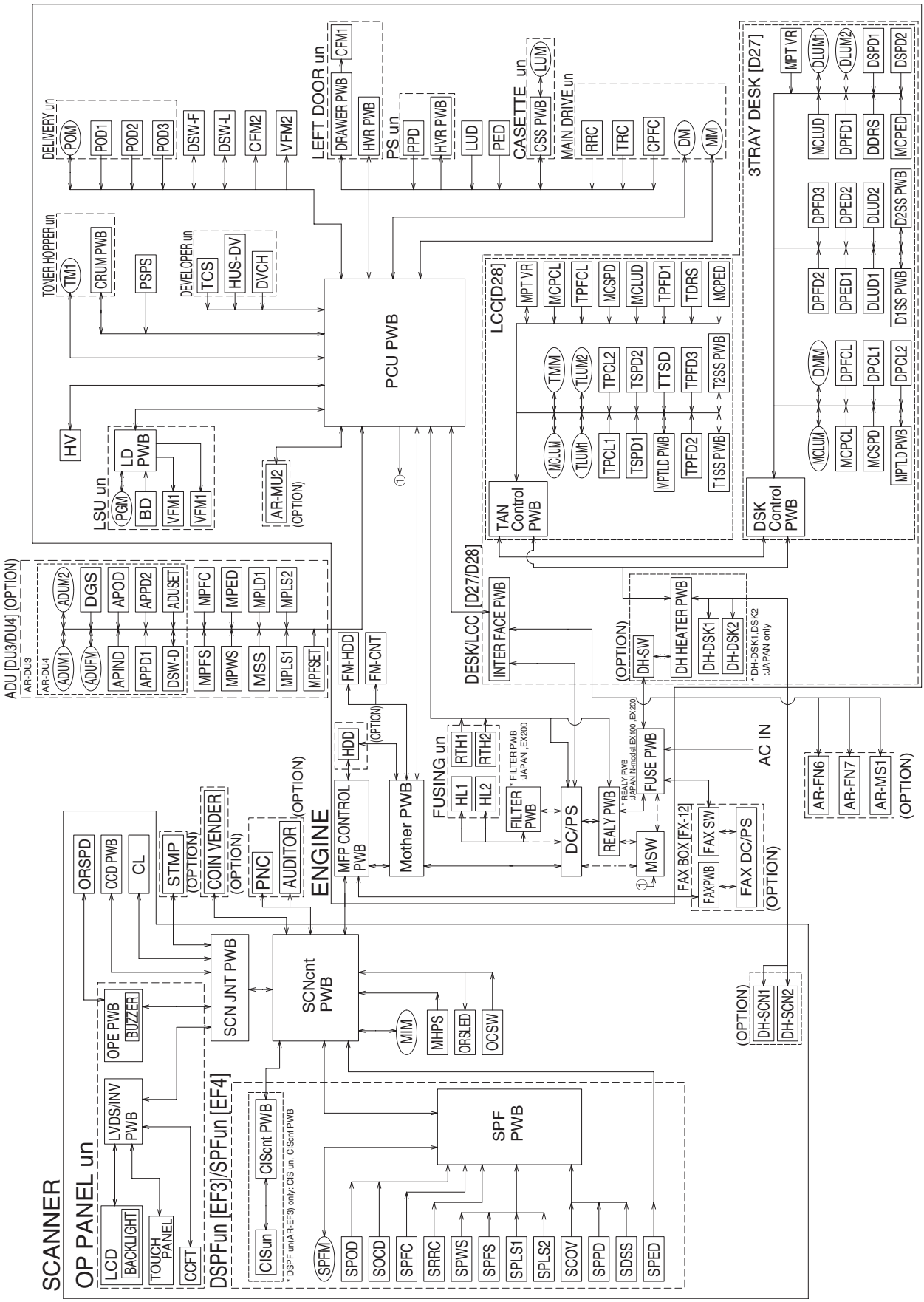

2. Actual wiring chart

Scanner (1/3)

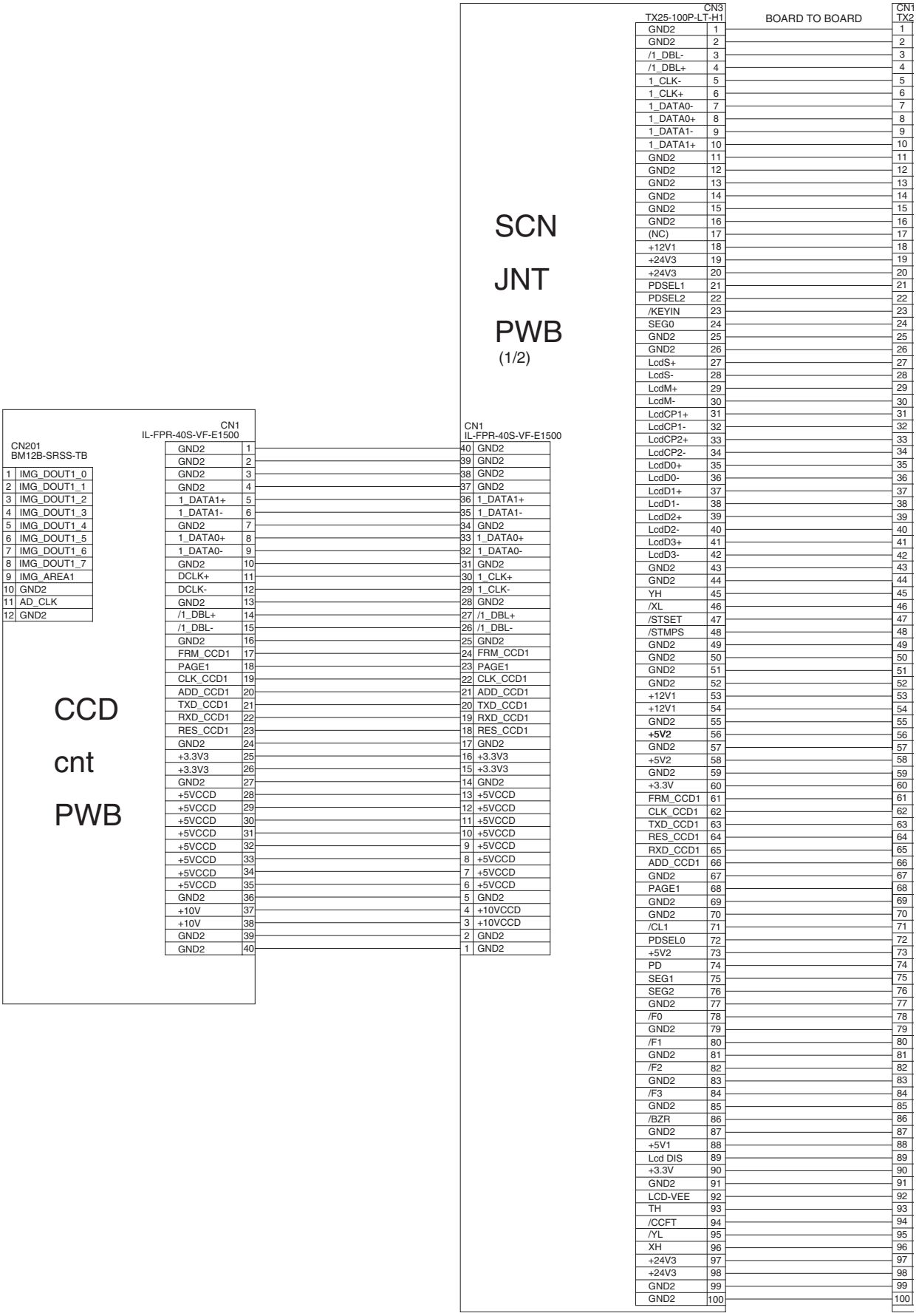

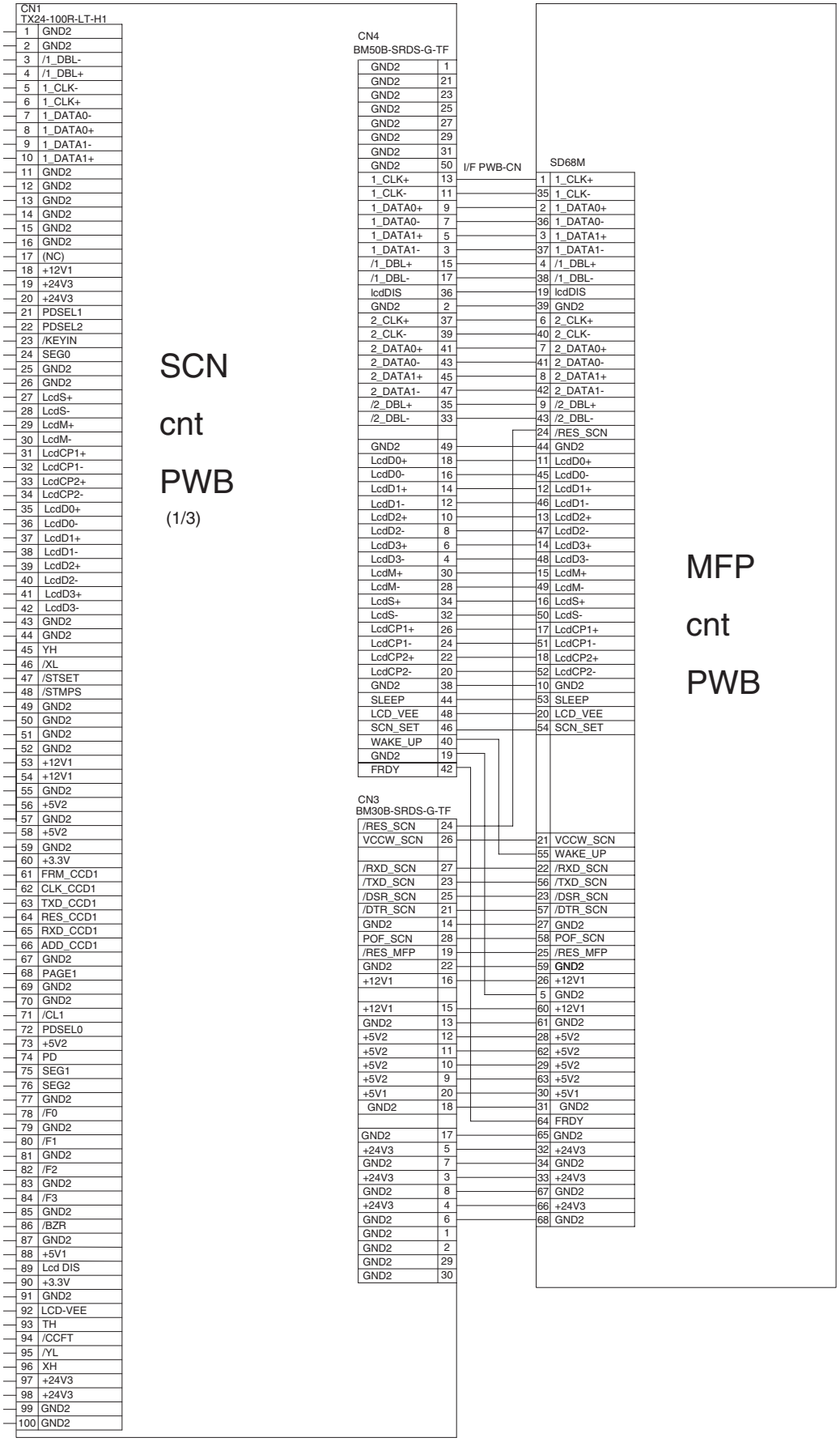
CN1
TX24-100R-LT-H1
1 GND2
2 GND2
3 /1_DBL-
4 /1_DBL+
5 1_CLK-
6 1_CLK+
7 1_DATA0-
8 1_DATA0+
9 1_DATA1-
10 1_DATA1+
11 GND2
12 GND2
13 GND2
14 GND2
15 GND2
16 GND2
17 (NC)
18 +12V1
19 +24V3
20 +24V3
21 PDSEL1
22 PDSEL2
23 /KEYIN
24 SEG0
25 GND2
26 GND2
27 LcdS+
28 LcdS-
29 LcdM+
30 LcdM-
31 LcdCP1+
32 LcdCP1-
33 LcdCP2+
34 LcdCP2-
35 LcdD0+
36 LcdD0-
37 LcdD1+
38 LcdD1-
39 LcdD2+
40 LcdD2-
41 LcdD3+
42 LcdD3-
43 GND2
44 GND2
45 YH
46 /XL
47 /STSET
48 /STMPS
49 GND2
50 GND2
51 GND2
52 GND2
53 +12V1
54 +12V1
55 GND2
56 +5V2
57 GND2
58 +5V2
59 GND2
60 +3.3V
61 FRM_CCD1
62 CLK_CCD1
63 TXD_CCD1
64 RES_CCD1
65 RXD_CCD1
66 ADD_CCD1
67 GND2
68 PAGE1
69 GND2
70 GND2
71 /CL1
72 PDSEL0
73 +5V2
74 PD
75 SEG1
76 SEG2
77 GND2
78 /F0
79 GND2
80 /F1
81 GND2
82 /F2
83 GND2
84 /F3
85 GND2
86 /BZR
87 GND2
88 +5V1
89 Lcd DIS
90 +3.3V
91 GND2
92 LCD-VEE
93 TH
94 /CCFT
95 /YL
96 XH
97 +24V3
98 +24V3
99 GND2
100 GND2
SCN
cnt
PWB
(1/3)
CN4
BM50B-SRDS-G-TF
GND2 1
GND2 21
GND2 23
GND2 25
GND2 27
GND2 29
GND2 31
GND2 50
1_CLK+ 13
1_CLK- 11
1_DATA0+ 9
1_DATA0- 7
1_DATA1+ 5
1_DATA1- 3
/1_DBL+ 15
/1_DBL- 17
lcdDIS 36
GND2 2
2_CLK+ 37
2_CLK- 39
2_DATA0+ 41
2_DATA0- 43
2_DATA1+ 45
2_DATA1- 47
/2_DBL+ 35
/2_DBL- 33
GND2 49
LcdD0+ 18
LcdD0- 16
LcdD1+ 14
LcdD1- 12
LcdD2+ 10
LcdD2- 8
LcdD3+ 6
LcdD3- 4
LcdM+ 30
LcdM- 28
LcdS+ 34
LcdS- 32
LcdCP1+ 26
LcdCP1- 24
LcdCP2+ 22
LcdCP2- 20
GND2 38
SLEEP 44
LCD_VEE 48
SCN_SET 46
WAKE_UP 40
GND2 19
FRDY 42
CN3
BM30B-SRDS-G-TF
/RES_SCN 24
VCCW_SCN 26
/RXD_SCN 27
/TXD_SCN 23
/DSR_SCN 25
/DTR_SCN 21
GND2 14
POF_SCN 28
/RES_MFP 19
GND2 22
+12V1 16
+12V1 15
GND2 13
+5V2 12
+5V2 11
+5V2 10
+5V2 9
+5V1 20
GND2 18
GND2 17
+24V3 5
GND2 7
+24V3 3
GND2 8
+24V3 4
GND2 6
GND2 1
GND2 2
GND2 29
GND2 30
I/F PWB-CN
SD68M
1 1_CLK+
35 1_CLK-
2 1_DATA0+
36 1_DATA0-
3 1_DATA1+
37 1_DATA1-
4 /1_DBL+
38 /1_DBL-
19 lcdDIS
39 GND2
6 2_CLK+
40 2_CLK-
7 2_DATA0+
41 2_DATA0-
8 2_DATA1+
42 2_DATA1-
9 /2_DBL+
43 /2_DBL-
24 /RES_SCN
44 GND2
11 LcdD0+
45 LcdD0-
12 LcdD1+
46 LcdD1-
13 LcdD2+
47 LcdD2-
14 LcdD3+
48 LcdD3-
15 LcdM+
49 LcdM-
16 LcdS+
50 LcdS-
17 LcdCP1+
51 LcdCP1-
18 LcdCP2+
52 LcdCP2-
10 GND2
53 SLEEP
20 LCD_VEE
54 SCN_SET
21 VCCW_SCN
55 WAKE_UP
22 /RXD_SCN
56 /TXD_SCN
23 /DSR_SCN
57 /DTR_SCN
27 GND2
58 POF_SCN
25 /RES_MFP
59 GND2
26 +12V1
5 GND2
60 +12V1
61 GND2
28 +5V2
62 +5V2
29 +5V2
63 +5V2
30 +5V1
31 GND2
64 FRDY
65 GND2
32 +24V3
34 GND2
33 +24V3
67 GND2
66 +24V3
68 GND2
MFP
cnt
PWB

Scanner (2/3)

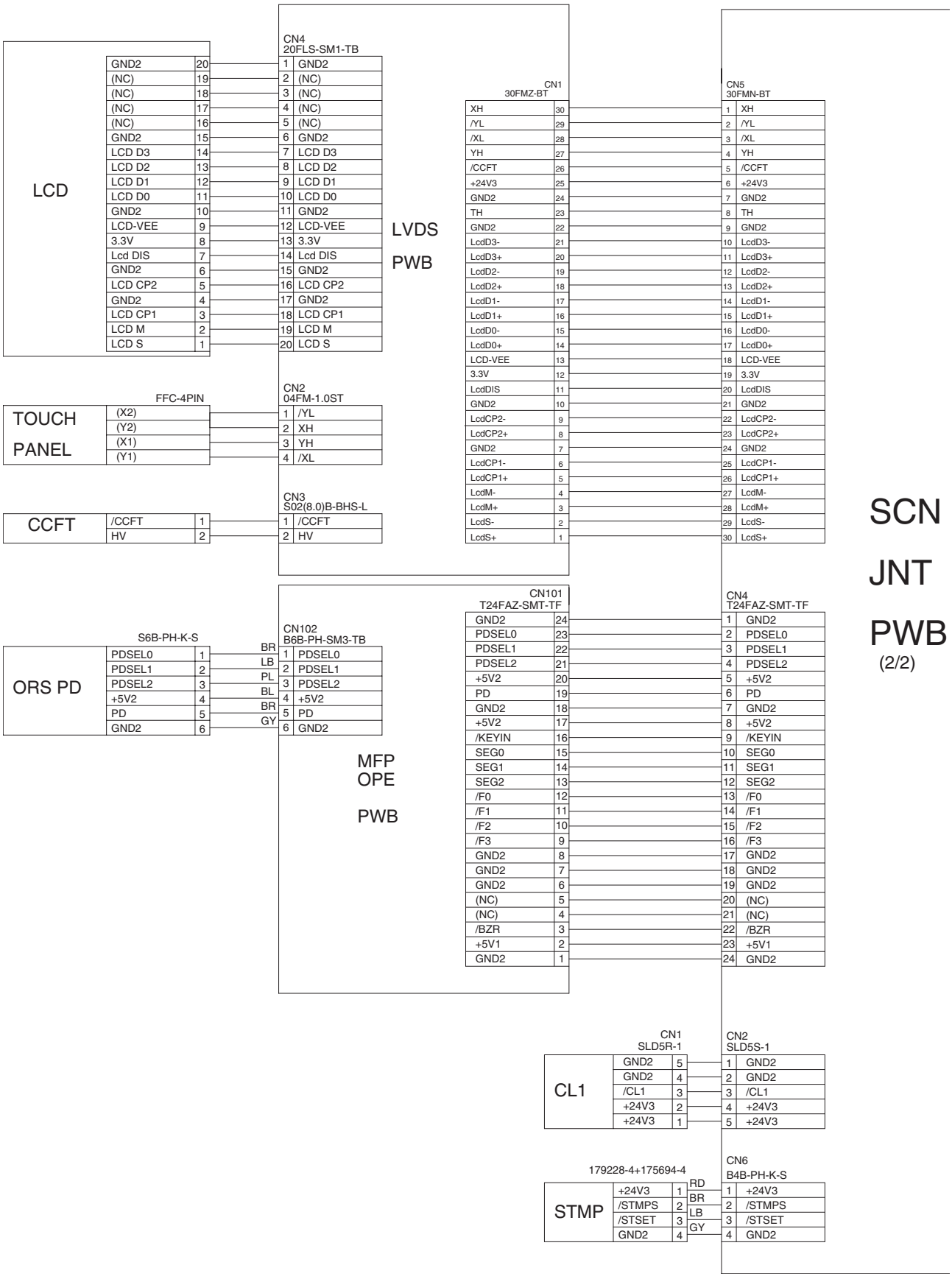
LCD
GND2 20
(NC) 19
(NC) 18
(NC) 17
(NC) 16
GND2 15
LCD D3 14
LCD D2 13
LCD D1 12
LCD D0 11
GND2 10
LCD-VEE 9
3.3V 8
Lcd DIS 7
GND2 6
LCD CP2 5
GND2 4
LCD CP1 3
LCD M 2
LCD S 1
CN4
20FLS-SM1-TB
1 GND2
2 (NC)
3 (NC)
4 (NC)
5 (NC)
6 GND2
7 LCD D3
8 LCD D2
9 LCD D1
10 LCD D0
11 GND2
12 LCD-VEE
13 3.3V
14 Lcd DIS
15 GND2
16 LCD CP2
17 GND2
18 LCD CP1
19 LCD M
20 LCD S
LVDS
PWB
CN1
30FMZ-BT
XH 30
/YL 29
/XL 28
YH 27
/CCFT 26
+24V3 25
GND2 24
TH 23
GND2 22
LcdD3- 21
LcdD3+ 20
LcdD2- 19
LcdD2+ 18
LcdD1- 17
LcdD1+ 16
LcdD0- 15
LcdD0+ 14
LCD-VEE 13
3.3V 12
LcdDIS 11
GND2 10
LcdCP2- 9
LcdCP2+ 8
GND2 7
LcdCP1- 6
LcdCP1+ 5
LcdM- 4
LcdM+ 3
LcdS- 2
LcdS+ 1
CN5
30FMN-BT
1 XH
2 /YL
3 /XL
4 YH
5 /CCFT
6 +24V3
7 GND2
8 TH
9 GND2
10 LcdD3-
11 LcdD3+
12 LcdD2-
13 LcdD2+
14 LcdD1-
15 LcdD1+
16 LcdD0-
17 LcdD0+
18 LCD-VEE
19 3.3V
20 LcdDIS
21 GND2
22 LcdCP2-
23 LcdCP2+
24 GND2
25 LcdCP1-
26 LcdCP1+
27 LcdM-
28 LcdM+
29 LcdS-
30 LcdS+
TOUCH PANEL
FFC-4PIN
(X2)
(Y2)
(X1)
(Y1)
CN2
04FM-1.0ST
1 /YL
2 XH
3 YH
4 /XL
CCFT
/CCFT 1
HV 2
CN3
S02(8.0)B-BHS-L
1 /CCFT
2 HV
SCN
JNT
PWB
(2/2)
ORS PD
S6B-PH-K-S
PDSEL0 1
PDSEL1 2
PDSEL2 3
+5V2 4
PD 5
GND2 6
BR
LB
PL
BL
BR
GY
CN102
B6B-PH-SM3-TB
1 PDSEL0
2 PDSEL1
3 PDSEL2
4 +5V2
5 PD
6 GND2
MFP
OPE
PWB
CN101
T24FAZ-SMT-TF
GND2 24
PDSEL0 23
PDSEL1 22
PDSEL2 21
+5V2 20
PD 19
GND2 18
+5V2 17
/KEYIN 16
SEG0 15
SEG1 14
SEG2 13
/F0 12
/F1 11
/F2 10
/F3 9
GND2 8
GND2 7
GND2 6
(NC) 5
(NC) 4
/BZR 3
+5V1 2
GND2 1
CN4
T24FAZ-SMT-TF
1 GND2
2 PDSEL0
3 PDSEL1
4 PDSEL2
5 +5V2
6 PD
7 GND2
8 +5V2
9 /KEYIN
10 SEG0
11 SEG1
12 SEG2
13 /F0
14 /F1
15 /F2
16 /F3
17 GND2
18 GND2
19 GND2
20 (NC)
21 (NC)
22 /BZR
23 +5V1
24 GND2
CL1
GND2 5
GND2 4
/CL1 3
+24V3 2
+24V3 1
CN1
SLD5R-1
CN2
SLD5S-1
1 GND2
2 GND2
3 /CL1
4 +24V3
5 +24V3
STMP
179228-4+175694-4
+24V3 1
/STMPS 2
/STSET 3
GND2 4
RD
BR
LB
GY
CN6
B4B-PH-K-S
1 +24V3
2 /STMPS
3 /STSET
4 GND2

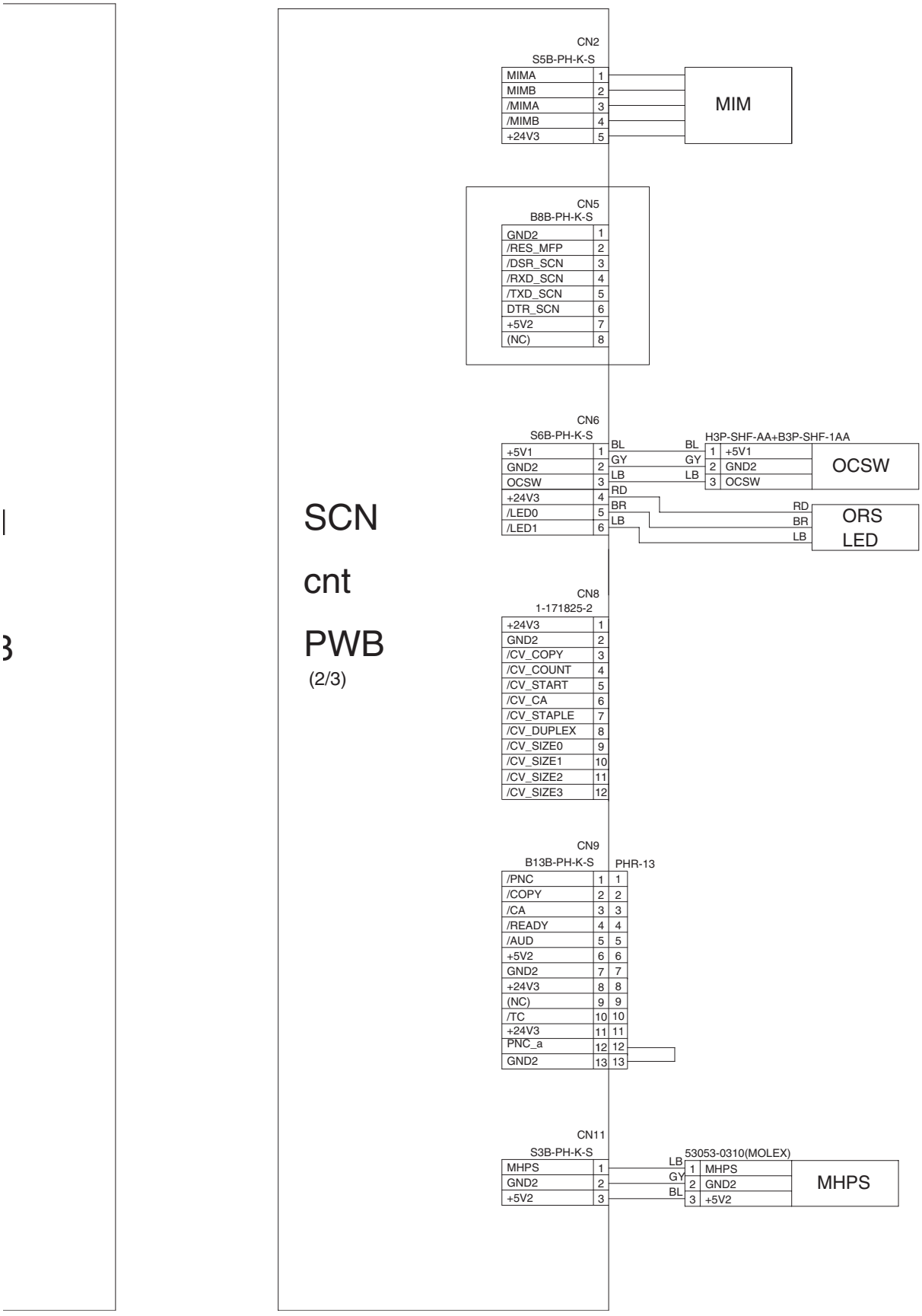
SCN
cnt
PWB
(2/3)
CN2
S5B-PH-K-S
MIMA 1
MIMB 2
/MIMA 3
/MIMB 4
+24V3 5
MIM
CN5
B8B-PH-K-S
GND2 1
/RES_MFP 2
/DSR_SCN 3
/RXD_SCN 4
/TXD_SCN 5
DTR_SCN 6
+5V2 7
(NC) 8
CN6
S6B-PH-K-S
+5V1 1
GND2 2
OCSW 3
+24V3 4
/LED0 5
/LED1 6
BL
GY
LB
RD
BR
LB
H3P-SHF-AA+B3P-SHF-1AA
1 +5V1
2 GND2
3 OCSW
OCSW
RD
BR
LB
ORS
LED
CN8
1-171825-2
+24V3 1
GND2 2
/CV_COPY 3
/CV_COUNT 4
/CV_START 5
/CV_CA 6
/CV_STAPLE 7
/CV_DUPLEX 8
/CV_SIZE0 9
/CV_SIZE1 10
/CV_SIZE2 11
/CV_SIZE3 12
CN9
B13B-PH-K-S
PHR-13
/PNC 1 1
/COPY 2 2
/CA 3 3
/READY 4 4
/AUD 5 5
+5V2 6 6
GND2 7 7
+24V3 8 8
(NC) 9 9
/TC 10 10
+24V3 11 11
PNC_a 12 12
GND2 13 13
CN11
S3B-PH-K-S
MHPS 1
GND2 2
+5V2 3
LB
GY
BL
53053-0310(MOLEX)
1 MHPS
2 GND2
3 +5V2
MHPS

Scanner (3/3)

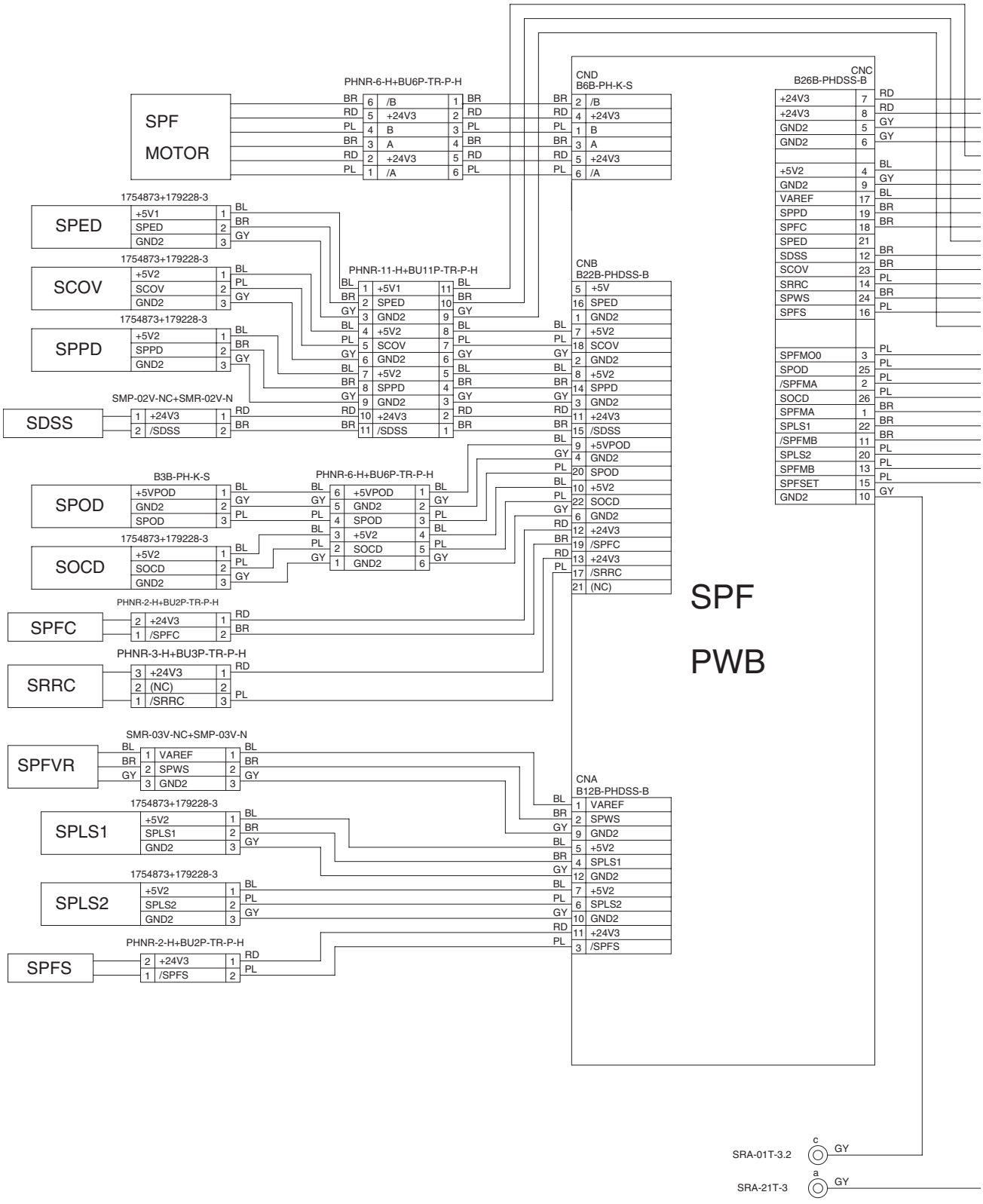
SPF MOTOR
PHNR-6-H+BU6P-TR-P-H
CND B6B-PH-K-S
CNC B26B-PHDSS-B
SPED
1754873+179228-3
SCOV
SPPD
PHNR-11-H+BU11P-TR-P-H
CNB B22B-PHDSS-B
SDSS
SMP-02V-NC+SMR-02V-N
SPOD
B3B-PH-K-S
SOCD
SPFC
PHNR-2-H+BU2P-TR-P-H
SRRC
PHNR-3-H+BU3P-TR-P-H
SPFVR
SMR-03V-NC+SMP-03V-N
SPLS1
SPLS2
SPFS
CNA B12B-PHDSS-B
SPF PWB
SRA-01T-3.2
SRA-21T-3

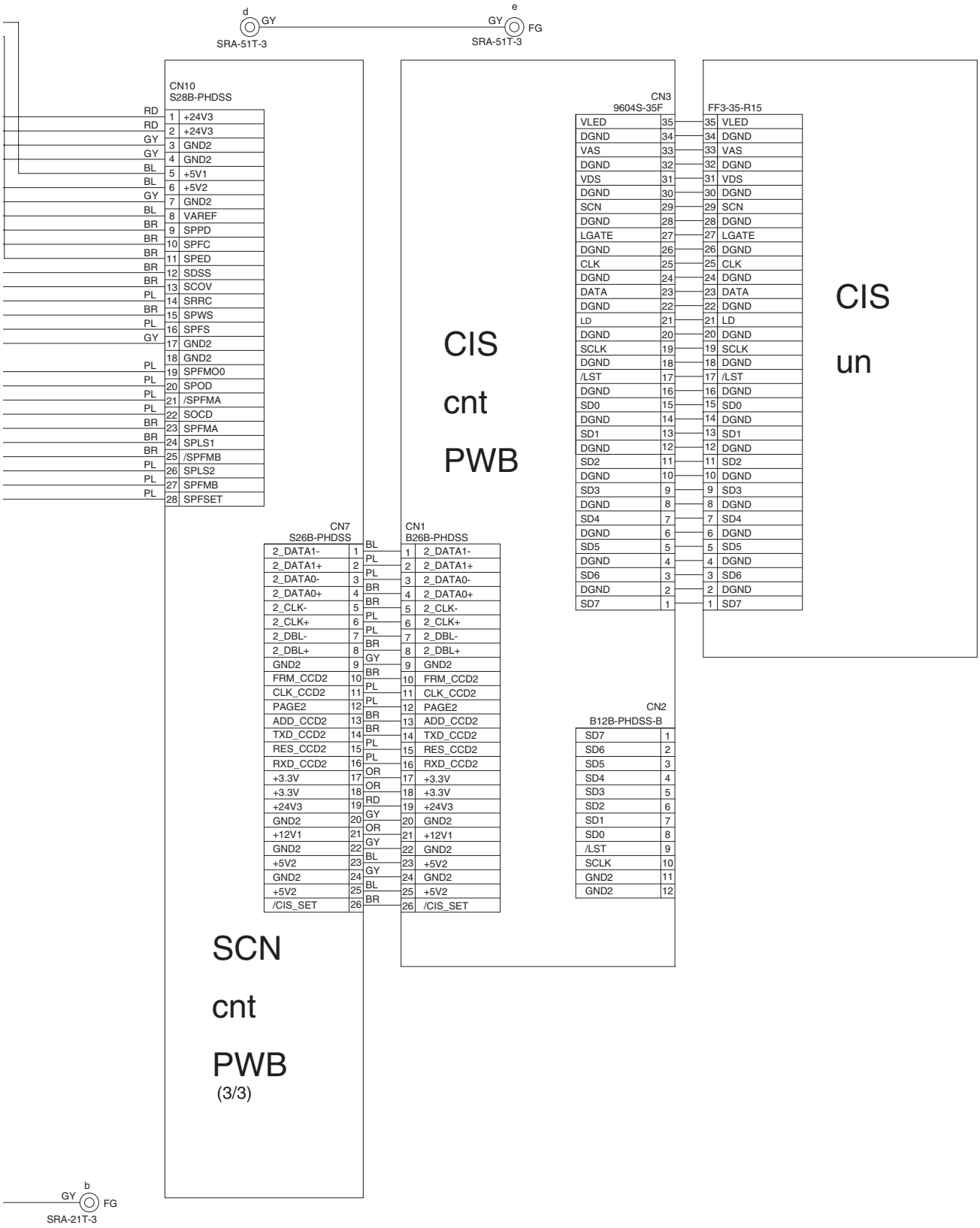
d
GY
SRA-51T-3
e
GY
FG
SRA-51T-3
CN10
S28B-PHDSS
RD 1 +24V3
RD 2 +24V3
GY 3 GND2
GY 4 GND2
BL 5 +5V1
BL 6 +5V2
GY 7 GND2
BL 8 VAREF
BR 9 SPPD
BR 10 SPFC
BR 11 SPED
BR 12 SDSS
BR 13 SCOV
PL 14 SRRC
BR 15 SPWS
PL 16 SPFS
GY 17 GND2
18 GND2
PL 19 SPFMO0
PL 20 SPOD
PL 21 /SPFMA
PL 22 SOCD
BR 23 SPFMA
BR 24 SPLS1
BR 25 /SPFMB
PL 26 SPLS2
PL 27 SPFMB
PL 28 SPFSET
CIS
cnt
PWB
CN3
9604S-35F
VLED 35
DGND 34
VAS 33
DGND 32
VDS 31
DGND 30
SCN 29
DGND 28
LGATE 27
DGND 26
CLK 25
DGND 24
DATA 23
DGND 22
LD 21
DGND 20
SCLK 19
DGND 18
/LST 17
DGND 16
SD0 15
DGND 14
SD1 13
DGND 12
SD2 11
DGND 10
SD3 9
DGND 8
SD4 7
DGND 6
SD5 5
DGND 4
SD6 3
DGND 2
SD7 1
FF3-35-R15
35 VLED
34 DGND
33 VAS
32 DGND
31 VDS
30 DGND
29 SCN
28 DGND
27 LGATE
26 DGND
25 CLK
24 DGND
23 DATA
22 DGND
21 LD
20 DGND
19 SCLK
18 DGND
17 /LST
16 DGND
15 SD0
14 DGND
13 SD1
12 DGND
11 SD2
10 DGND
9 SD3
8 DGND
7 SD4
6 DGND
5 SD5
4 DGND
3 SD6
2 DGND
1 SD7
CIS
un
CN7
S26B-PHDSS
2_DATA1- 1 BL
2_DATA1+ 2 PL
2_DATA0- 3 PL
2_DATA0+ 4 BR
2_CLK- 5 BR
2_CLK+ 6 PL
2_DBL- 7 PL
2_DBL+ 8 BR
GND2 9 GY
FRM_CCD2 10 BR
CLK_CCD2 11 PL
PAGE2 12 PL
ADD_CCD2 13 BR
TXD_CCD2 14 BR
RES_CCD2 15 PL
RXD_CCD2 16 PL
+3.3V 17 OR
+3.3V 18 OR
+24V3 19 RD
GND2 20 GY
+12V1 21 OR
GND2 22 GY
+5V2 23 BL
GND2 24 GY
+5V2 25 BL
/CIS_SET 26 BR
CN1
B26B-PHDSS
1 2_DATA1-
2 2_DATA1+
3 2_DATA0-
4 2_DATA0+
5 2_CLK-
6 2_CLK+
7 2_DBL-
8 2_DBL+
9 GND2
10 FRM_CCD2
11 CLK_CCD2
12 PAGE2
13 ADD_CCD2
14 TXD_CCD2
15 RES_CCD2
16 RXD_CCD2
17 +3.3V
18 +3.3V
19 +24V3
20 GND2
21 +12V1
22 GND2
23 +5V2
24 GND2
25 +5V2
26 /CIS_SET
CN2
B12B-PHDSS-B
SD7 1
SD6 2
SD5 3
SD4 4
SD3 5
SD2 6
SD1 7
SD0 8
/LST 9
SCLK 10
GND2 11
GND2 12
SCN
cnt
PWB
(3/3)
b
GY
FG
SRA-21T-3

Engine (1/5)

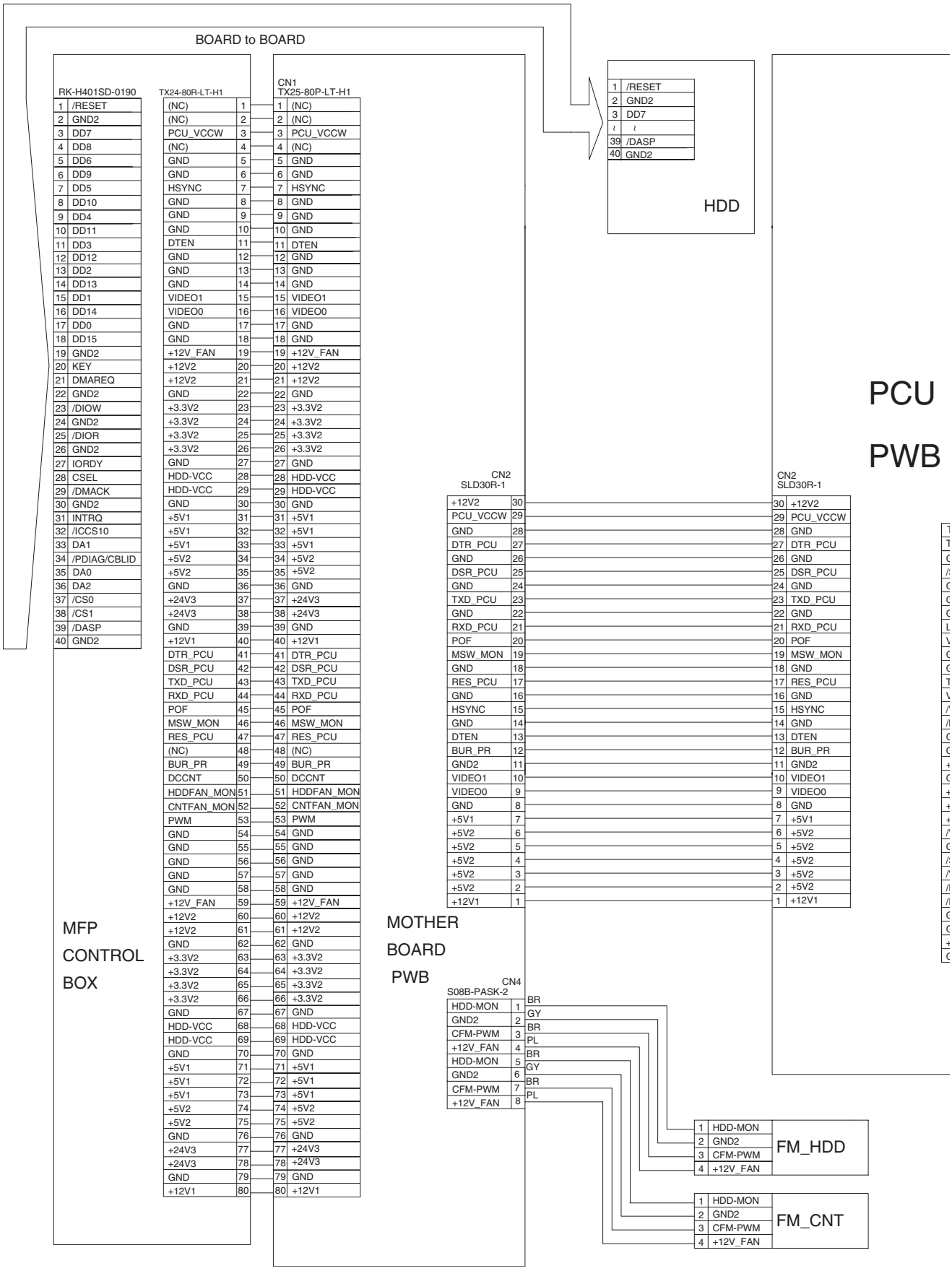
BOARD to BOARD
RK-H401SD-0190
TX24-80R-LT-H1
CN1
TX25-80P-LT-H1
1 /RESET
2 GND2
3 DD7
39 /DASP
40 GND2
HDD
PCU
PWB
CN2
SLD30R-1
CN2
SLD30R-1
MFP
CONTROL
BOX
MOTHER
BOARD
PWB
CN4
S08B-PASK-2
HDD-MON
GND2
CFM-PWM
+12V_FAN
FM_HDD
FM_CNT

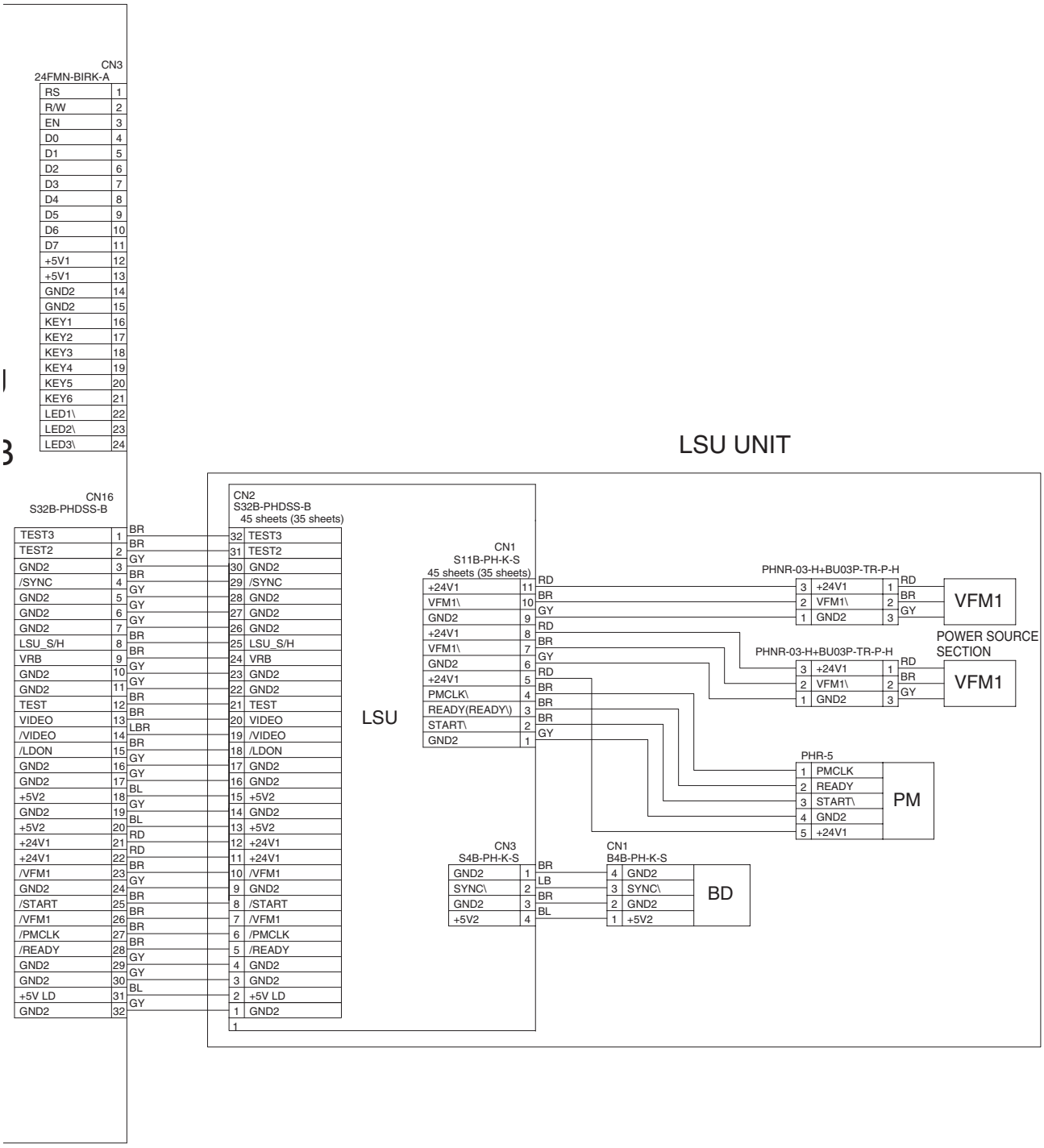
CN3
24FMN-BIRK-A
RS 1
R/W 2
EN 3
D0 4
D1 5
D2 6
D3 7
D4 8
D5 9
D6 10
D7 11
+5V1 12
+5V1 13
GND2 14
GND2 15
KEY1 16
KEY2 17
KEY3 18
KEY4 19
KEY5 20
KEY6 21
LED1\ 22
LED2\ 23
LED3\ 24
LSU UNIT
CN16
S32B-PHDSS-B
TEST3 1 BR
TEST2 2 BR
GND2 3 GY
/SYNC 4 BR
GND2 5 GY
GND2 6 GY
GND2 7 GY
LSU_S/H 8 BR
VRB 9 BR
GND2 10 GY
GND2 11 GY
TEST 12 BR
VIDEO 13 BR
/VIDEO 14 LBR
/LDON 15 BR
GND2 16 GY
GND2 17 GY
+5V2 18 BL
GND2 19 GY
+5V2 20 BL
+24V1 21 RD
+24V1 22 RD
/VFM1 23 BR
GND2 24 GY
/START 25 BR
/VFM1 26 BR
/PMCLK 27 BR
/READY 28 BR
GND2 29 GY
GND2 30 GY
+5V LD 31 BL
GND2 32 GY
CN2
S32B-PHDSS-B
45 sheets (35 sheets)
32 TEST3
31 TEST2
30 GND2
29 /SYNC
28 GND2
27 GND2
26 GND2
25 LSU_S/H
24 VRB
23 GND2
22 GND2
21 TEST
20 VIDEO
19 /VIDEO
18 /LDON
17 GND2
16 GND2
15 +5V2
14 GND2
13 +5V2
12 +24V1
11 +24V1
10 /VFM1
9 GND2
8 /START
7 /VFM1
6 /PMCLK
5 /READY
4 GND2
3 GND2
2 +5V LD
1 GND2
1
LSU
CN1
S11B-PH-K-S
45 sheets (35 sheets)
+24V1 11 RD
VFM1\ 10 BR
GND2 9 GY
+24V1 8 RD
VFM1\ 7 BR
GND2 6 GY
+24V1 5 RD
PMCLK\ 4 BR
READY(READY\) 3 BR
START\ 2 BR
GND2 1 GY
PHNR-03-H+BU03P-TR-P-H
3 +24V1 1 RD
2 VFM1\ 2 BR
1 GND2 3 GY
VFM1
POWER SOURCE SECTION
PHNR-03-H+BU03P-TR-P-H
3 +24V1 1 RD
2 VFM1\ 2 BR
1 GND2 3 GY
VFM1
PHR-5
1 PMCLK
2 READY
3 START\
4 GND2
5 +24V1
PM
CN3
S4B-PH-K-S
GND2 1 BR
SYNC\ 2 LB
GND2 3 BR
+5V2 4 BL
CN1
B4B-PH-K-S
4 GND2
3 SYNC\
2 GND2
1 +5V2
BD

Engine (2/5)

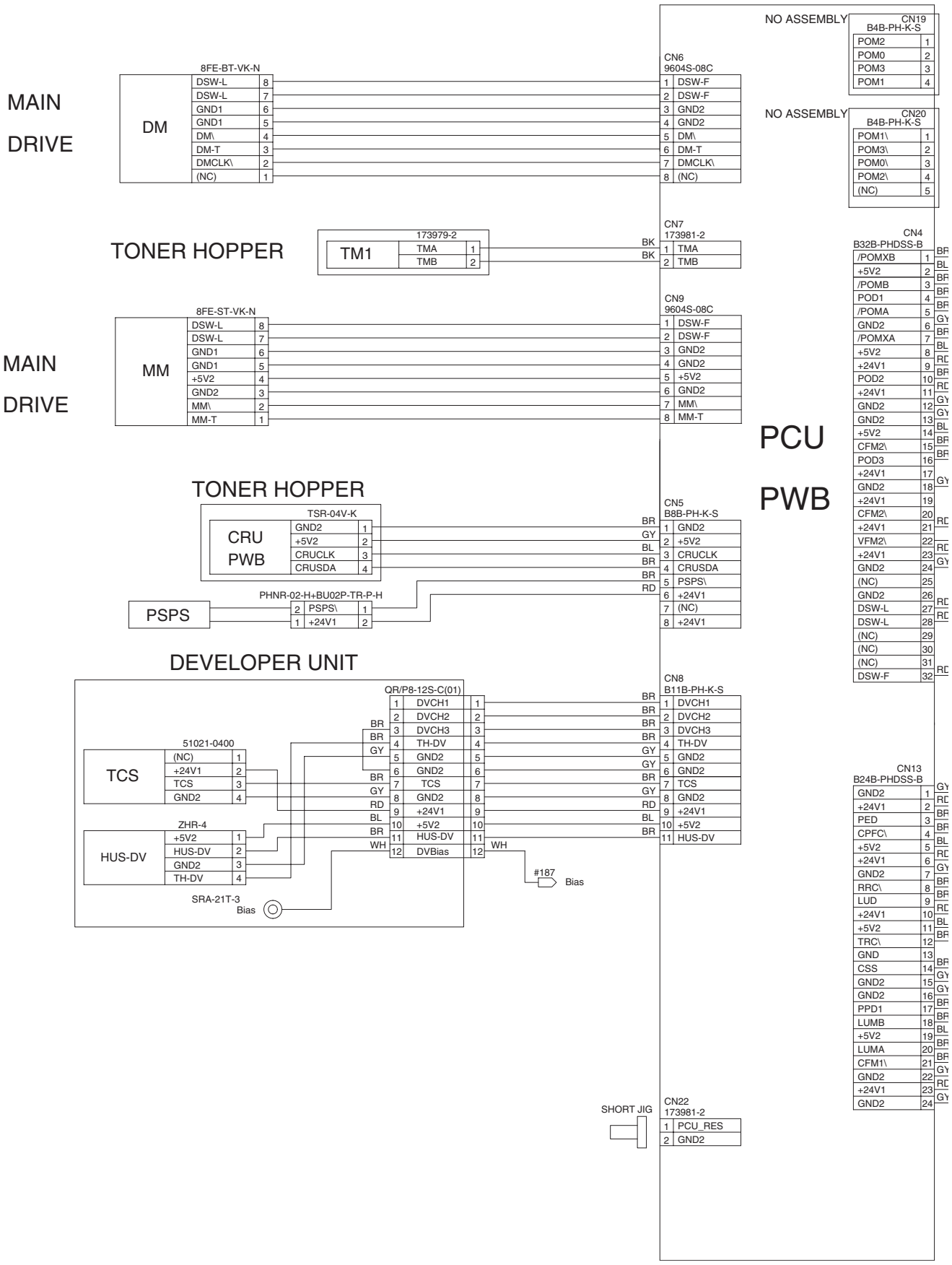
MAIN DRIVE
8FE-BT-VK-N
DM
DSW-L 8
DSW-L 7
GND1 6
GND1 5
DM\ 4
DM-T 3
DMCLK\ 2
(NC) 1
CN6 9604S-08C
1 DSW-F
2 DSW-F
3 GND2
4 GND2
5 DM\
6 DM-T
7 DMCLK\
8 (NC)
NO ASSEMBLY
CN19 B4B-PH-K-S
POM2 1
POM0 2
POM3 3
POM1 4
NO ASSEMBLY
CN20 B4B-PH-K-S
POM1\ 1
POM3\ 2
POM0\ 3
POM2\ 4
(NC) 5
TONER HOPPER
173979-2
TM1
TMA 1
TMB 2
BK
BK
CN7 173981-2
1 TMA
2 TMB
MAIN DRIVE
8FE-ST-VK-N
MM
DSW-L 8
DSW-L 7
GND1 6
GND1 5
+5V2 4
GND2 3
MM\ 2
MM-T 1
CN9 9604S-08C
1 DSW-F
2 DSW-F
3 GND2
4 GND2
5 +5V2
6 GND2
7 MM\
8 MM-T
PCU PWB
CN4 B32B-PHDSS-B
/POMXB 1 BR
+5V2 2 BL
/POMB 3 BR
POD1 4 BR
/POMA 5 BR
GND2 6 GY
/POMXA 7 BR
+5V2 8 BL
+24V1 9 RD
POD2 10 BR
+24V1 11 RD
GND2 12 GY
GND2 13 GY
+5V2 14 BL
CFM2\ 15 BR
POD3 16 BR
+24V1 17
GND2 18 GY
+24V1 19
CFM2\ 20
+24V1 21 RD
VFM2\ 22
+24V1 23 RD
GND2 24 GY
(NC) 25
GND2 26
DSW-L 27 RD
DSW-L 28 RD
(NC) 29
(NC) 30
(NC) 31 RD
DSW-F 32
TONER HOPPER
TSR-04V-K
CRU PWB
GND2 1
+5V2 2
CRUCLK 3
CRUSDA 4
BR
GY
BL
BR
BR
RD
CN5 B8B-PH-K-S
1 GND2
2 +5V2
3 CRUCLK
4 CRUSDA
5 PSPS\
6 +24V1
7 (NC)
8 +24V1
PSPS
PHNR-02-H+BU02P-TR-P-H
2 PSPS\ 1
1 +24V1 2
DEVELOPER UNIT
QR/P8-12S-C(01)
1 DVCH1 1
2 DVCH2 2
3 DVCH3 3
4 TH-DV 4
5 GND2 5
6 GND2 6
7 TCS 7
8 GND2 8
9 +24V1 9
10 +5V2 10
11 HUS-DV 11
12 DVBias 12
BR
BR
GY
BR
GY
RD
BL
BR
WH
WH
CN8 B11B-PH-K-S
1 DVCH1
2 DVCH2
3 DVCH3
4 TH-DV
5 GND2
6 GND2
7 TCS
8 GND2
9 +24V1
10 +5V2
11 HUS-DV
51021-0400
TCS
(NC) 1
+24V1 2
TCS 3
GND2 4
ZHR-4
HUS-DV
+5V2 1
HUS-DV 2
GND2 3
TH-DV 4
SRA-21T-3
Bias
#187
Bias
CN13 B24B-PHDSS-B
GND2 1 GY
+24V1 2 RD
PED 3 BR
CPFC\ 4 BR
+5V2 5 BL
+24V1 6 RD
GND2 7 GY
RRC\ 8 BR
LUD 9 BR
+24V1 10 RD
+5V2 11 BL
TRC\ 12 BR
GND 13
CSS 14 BR
GND2 15 GY
GND2 16 GY
PPD1 17 BR
LUMB 18 BR
+5V2 19 BL
LUMA 20 BR
CFM1\ 21 BR
GND2 22 GY
+24V1 23 RD
GND2 24 GY
SHORT JIG
CN22 173981-2
1 PCU_RES
2 GND2

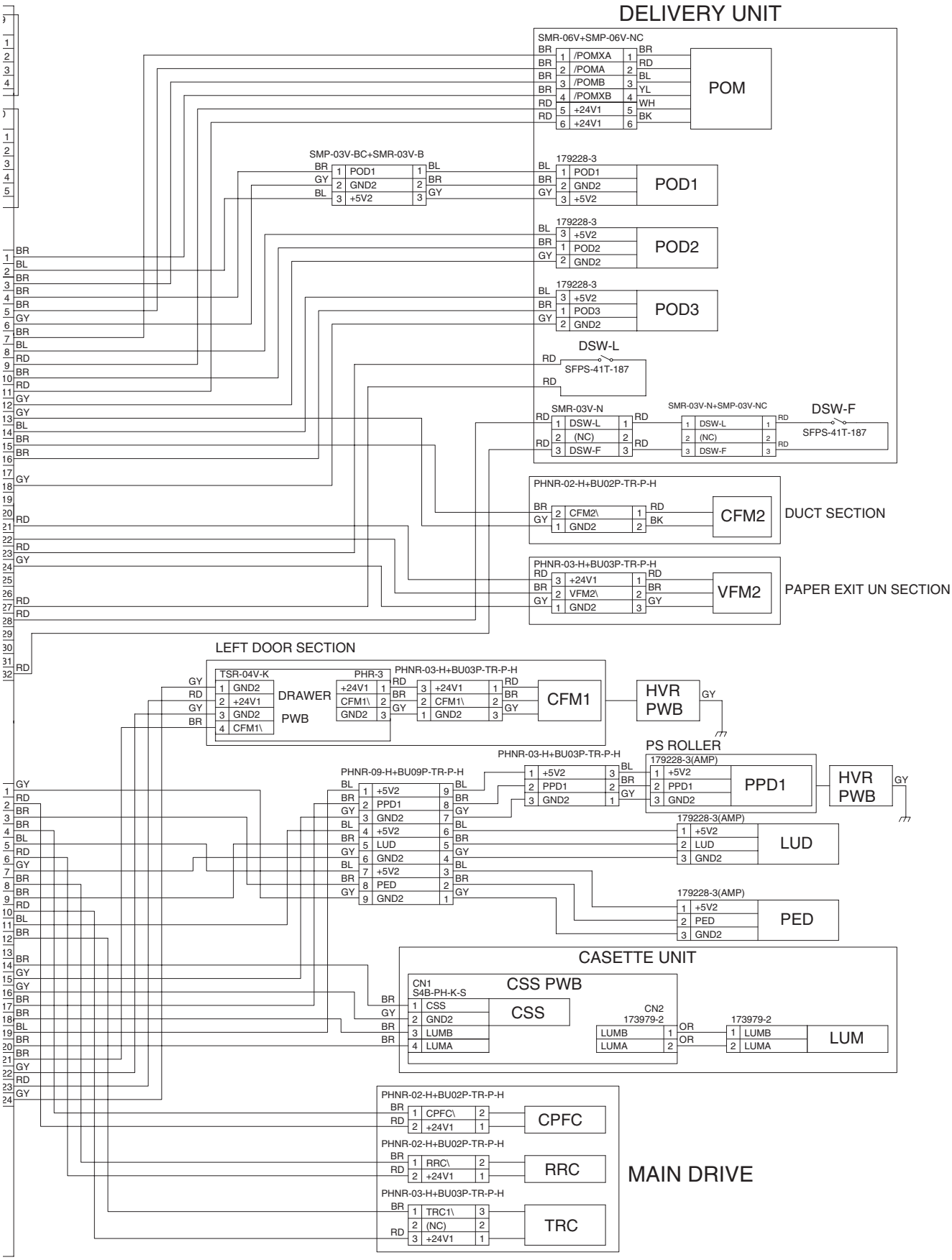
DELIVERY UNIT
SMR-06V+SMP-06V-NC
/POMXA
/POMA
/POMB
/POMXB
+24V1
+24V1
POM
SMP-03V-BC+SMR-03V-B
POD1
GND2
+5V2
179228-3
POD1
POD2
POD3
DSW-L
SFPS-41T-187
SMR-03V-N
SMR-03V-N+SMP-03V-NC
DSW-F
(NC)
PHNR-02-H+BU02P-TR-P-H
CFM2\
CFM2
DUCT SECTION
PHNR-03-H+BU03P-TR-P-H
VFM2\
VFM2
PAPER EXIT UN SECTION
LEFT DOOR SECTION
TSR-04V-K
DRAWER PWB
PHR-3
CFM1\
CFM1
HVR PWB
PS ROLLER
179228-3(AMP)
PPD1
PHNR-09-H+BU09P-TR-P-H
LUD
PED
CASETTE UNIT
CN1
S4B-PH-K-S
CSS PWB
CSS
LUMB
LUMA
CN2
173979-2
LUM
MAIN DRIVE
CPFC\
CPFC
RRC\
RRC
TRC1\
TRC

Engine (100V series) (3/5)

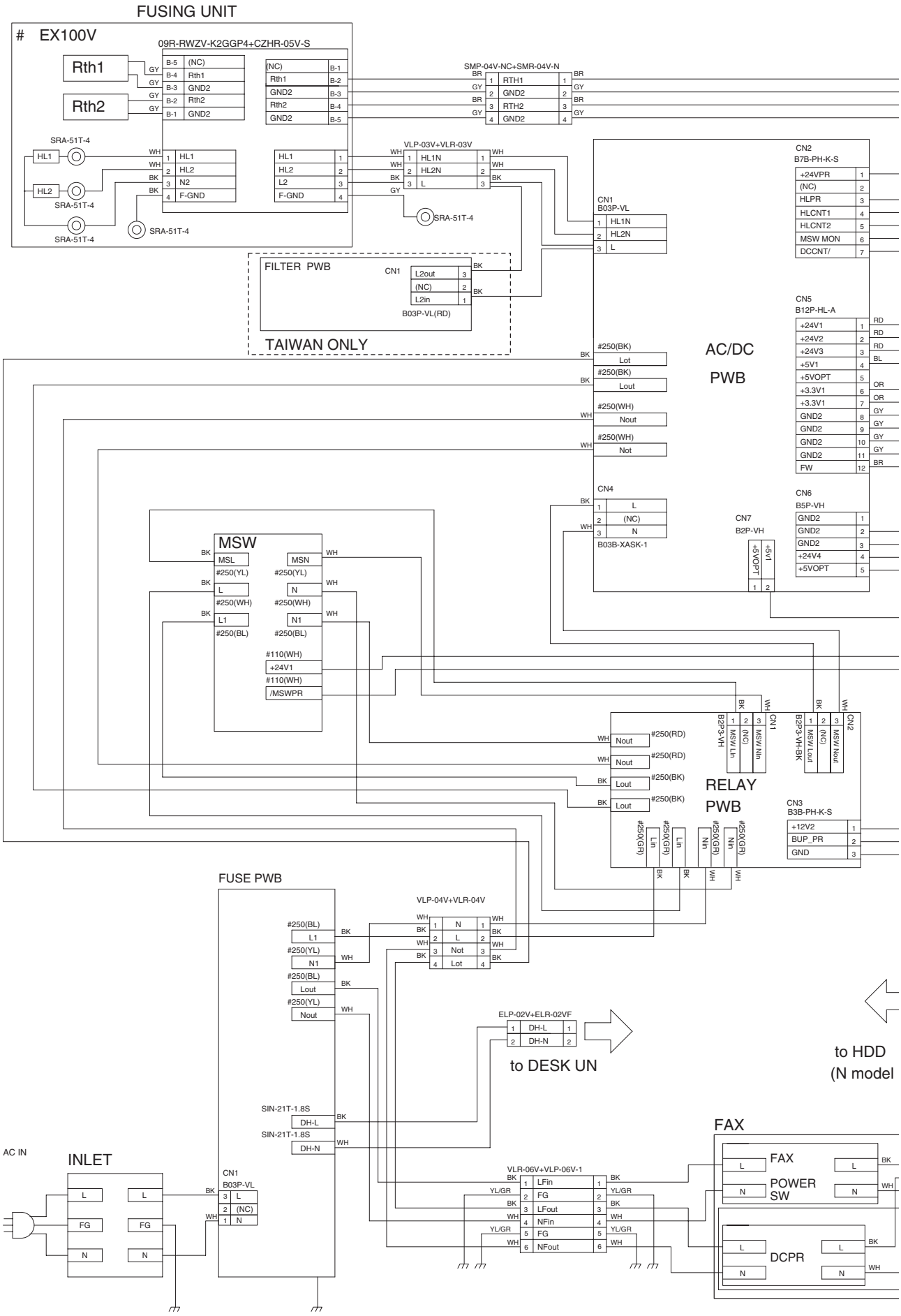

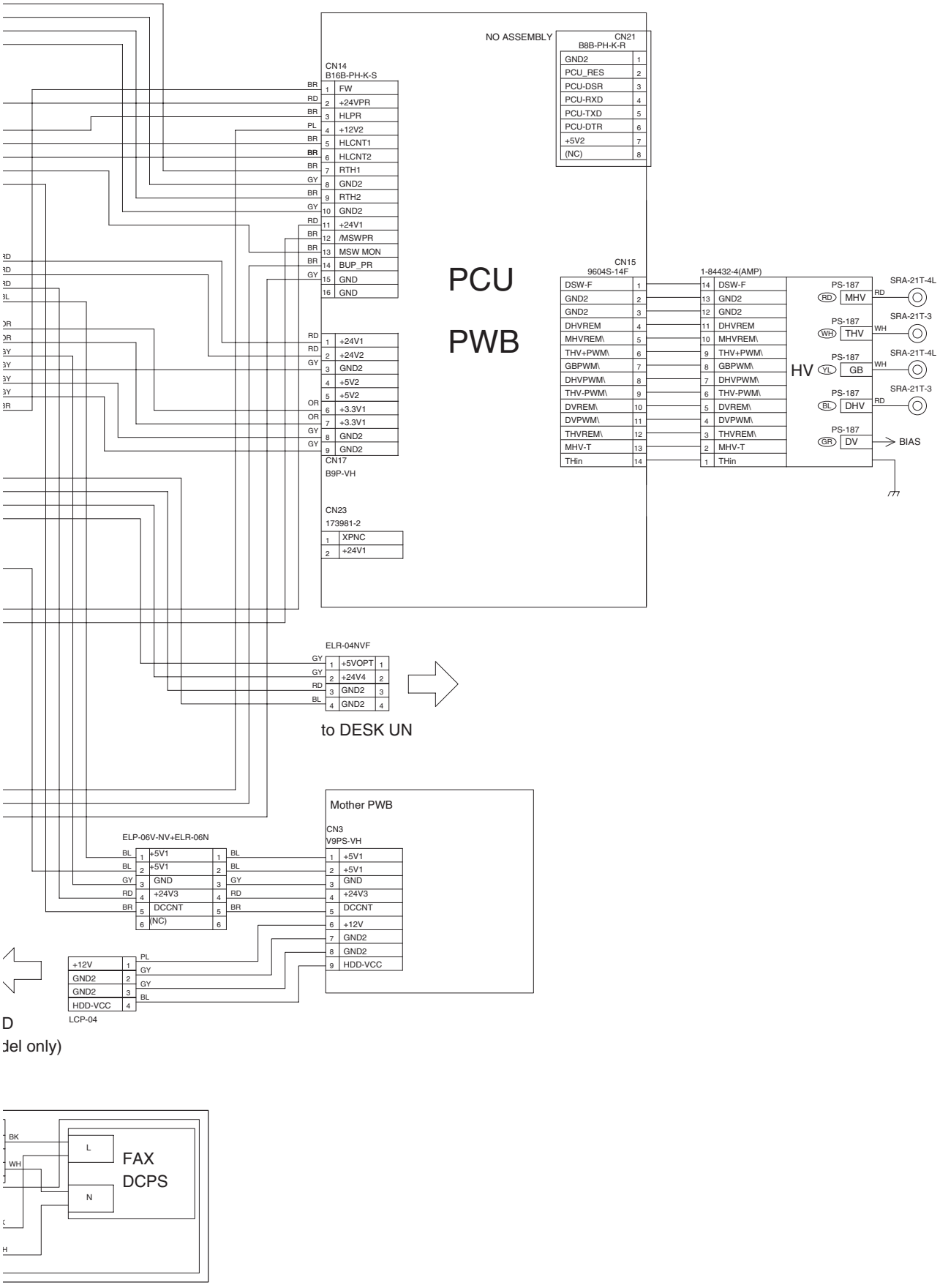
NO ASSEMBLY
CN21
B8B-PH-K-R
GND2 1
PCU_RES 2
PCU-DSR 3
PCU-RXD 4
PCU-TXD 5
PCU-DTR 6
+5V2 7
(NC) 8
CN14
B16B-PH-K-S
1 FW
2 +24VPR
3 HLPR
4 +12V2
5 HLCNT1
6 HLCNT2
7 RTH1
8 GND2
9 RTH2
10 GND2
11 +24V1
12 /MSWPR
13 MSW MON
14 BUP_PR
15 GND
16 GND
PCU
PWB
CN15
9604S-14F
1-84432-4(AMP)
DSW-F
GND2
GND2
DHVREM
MHVREM\
THV+PWM\
GBPWM\
DHVPWM\
THV-PWM\
DVREM\
DVPWM\
THVREM\
MHV-T
THin
HV
PS-187
MHV
THV
GB
DHV
DV
SRA-21T-4L
SRA-21T-3
BIAS
1 +24V1
2 +24V2
3 GND2
4 +5V2
5 +5V2
6 +3.3V1
7 +3.3V1
8 GND2
9 GND2
CN17
B9P-VH
CN23
173981-2
1 XPNC
2 +24V1
ELR-04NVF
1 +5VOPT
2 +24V4
3 GND2
4 GND2
to DESK UN
Mother PWB
CN3
V9PS-VH
1 +5V1
2 +5V1
3 GND
4 +24V3
5 DCCNT
6 +12V
7 GND2
8 GND2
9 HDD-VCC
ELP-06V-NV+ELR-06N
1 +5V1
2 +5V1
3 GND
4 +24V3
5 DCCNT
6 (NC)
+12V 1
GND2 2
GND2 3
HDD-VCC 4
LCP-04
D
del only)
BK
WH
L
N
FAX
DCPS

Engine (200V series) (4/5)

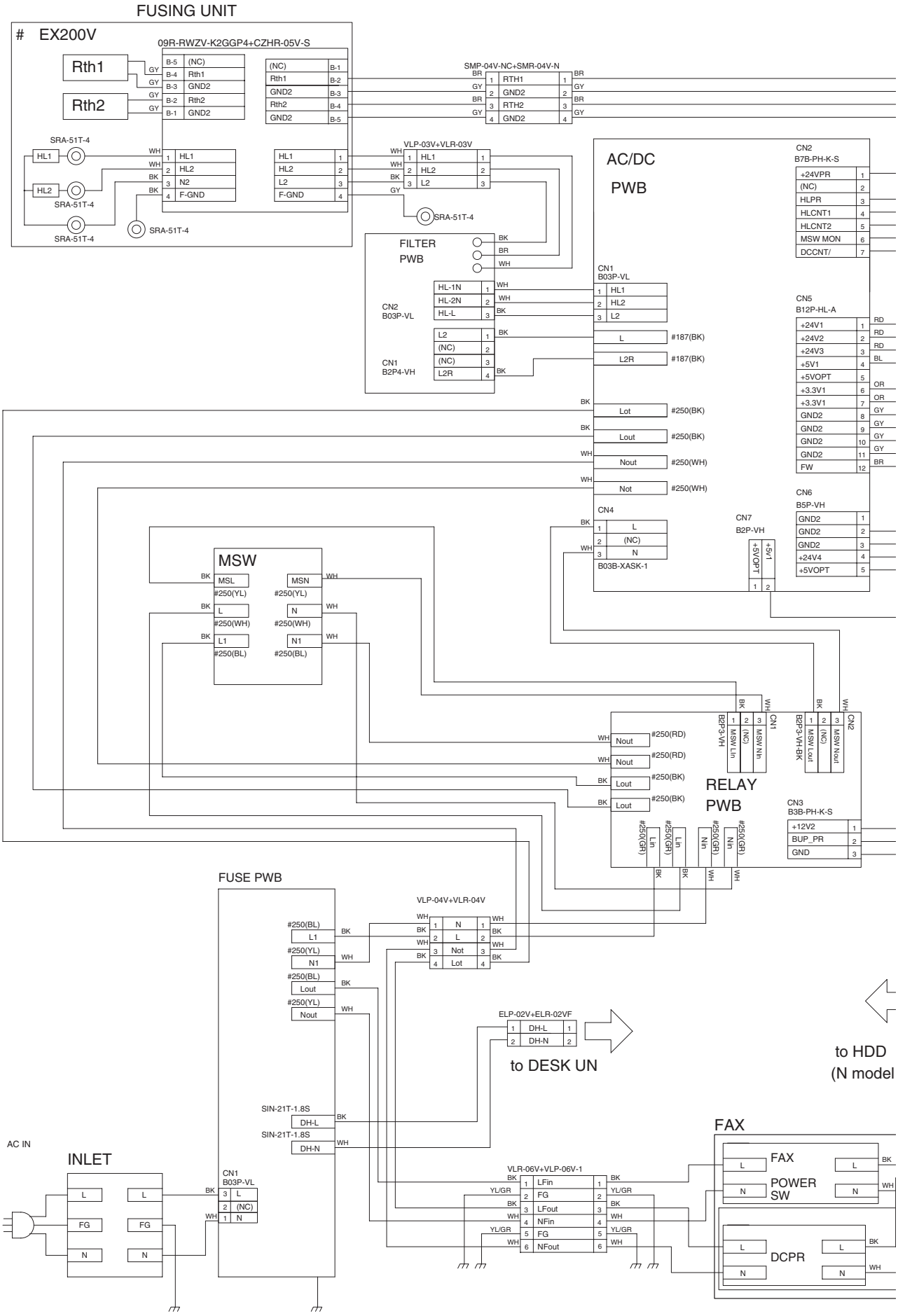

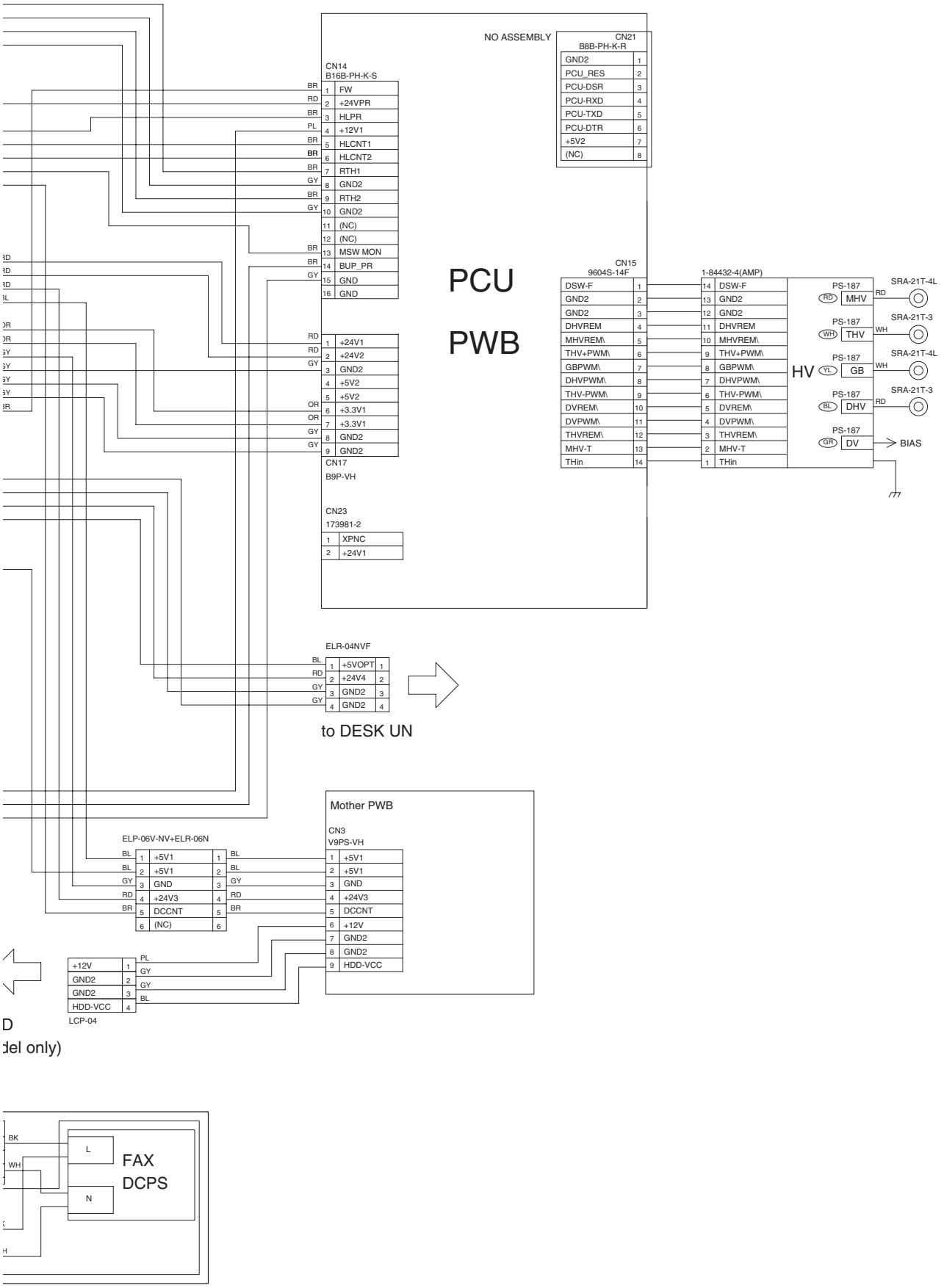
NO ASSEMBLY
CN21
B8B-PH-K-R
GND2 1
PCU_RES 2
PCU-DSR 3
PCU-RXD 4
PCU-TXD 5
PCU-DTR 6
+5V2 7
(NC) 8
CN14
B16B-PH-K-S
1 FW
2 +24VPR
3 HLPR
4 +12V1
5 HLCNT1
6 HLCNT2
7 RTH1
8 GND2
9 RTH2
10 GND2
11 (NC)
12 (NC)
13 MSW MON
14 BUP_PR
15 GND
16 GND
1 +24V1
2 +24V2
3 GND2
4 +5V2
5 +5V2
6 +3.3V1
7 +3.3V1
8 GND2
9 GND2
CN17
B9P-VH
CN23
173981-2
1 XPNC
2 +24V1
PCU
PWB
CN15
9604S-14F
DSW-F 1
GND2 2
GND2 3
DHVREM 4
MHVREM\ 5
THV+PWM\ 6
GBPWM\ 7
DHVPWM\ 8
THV-PWM\ 9
DVREM\ 10
DVPWM\ 11
THVREM\ 12
MHV-T 13
THin 14
1-84432-4(AMP)
14 DSW-F
13 GND2
12 GND2
11 DHVREM
10 MHVREM\
9 THV+PWM\
8 GBPWM\
7 DHVPWM\
6 THV-PWM\
5 DVREM\
4 DVPWM\
3 THVREM\
2 MHV-T
1 THin
HV
PS-187
RD MHV
PS-187
WH THV
PS-187
YL GB
PS-187
BL DHV
PS-187
GR DV
SRA-21T-4L
SRA-21T-3
SRA-21T-4L
SRA-21T-3
BIAS
ELR-04NVF
1 +5VOPT 1
2 +24V4 2
3 GND2 3
4 GND2 4
to DESK UN
Mother PWB
CN3
V9PS-VH
1 +5V1
2 +5V1
3 GND
4 +24V3
5 DCCNT
6 +12V
7 GND2
8 GND2
9 HDD-VCC
ELP-06V-NV+ELR-06N
1 +5V1 1
2 +5V1 2
3 GND 3
4 +24V3 4
5 DCCNT 5
6 (NC) 6
+12V 1
GND2 2
GND2 3
HDD-VCC 4
LCP-04
D
del only)
BK
WH
L
N
FAX
DCPS

Engine (5/5)

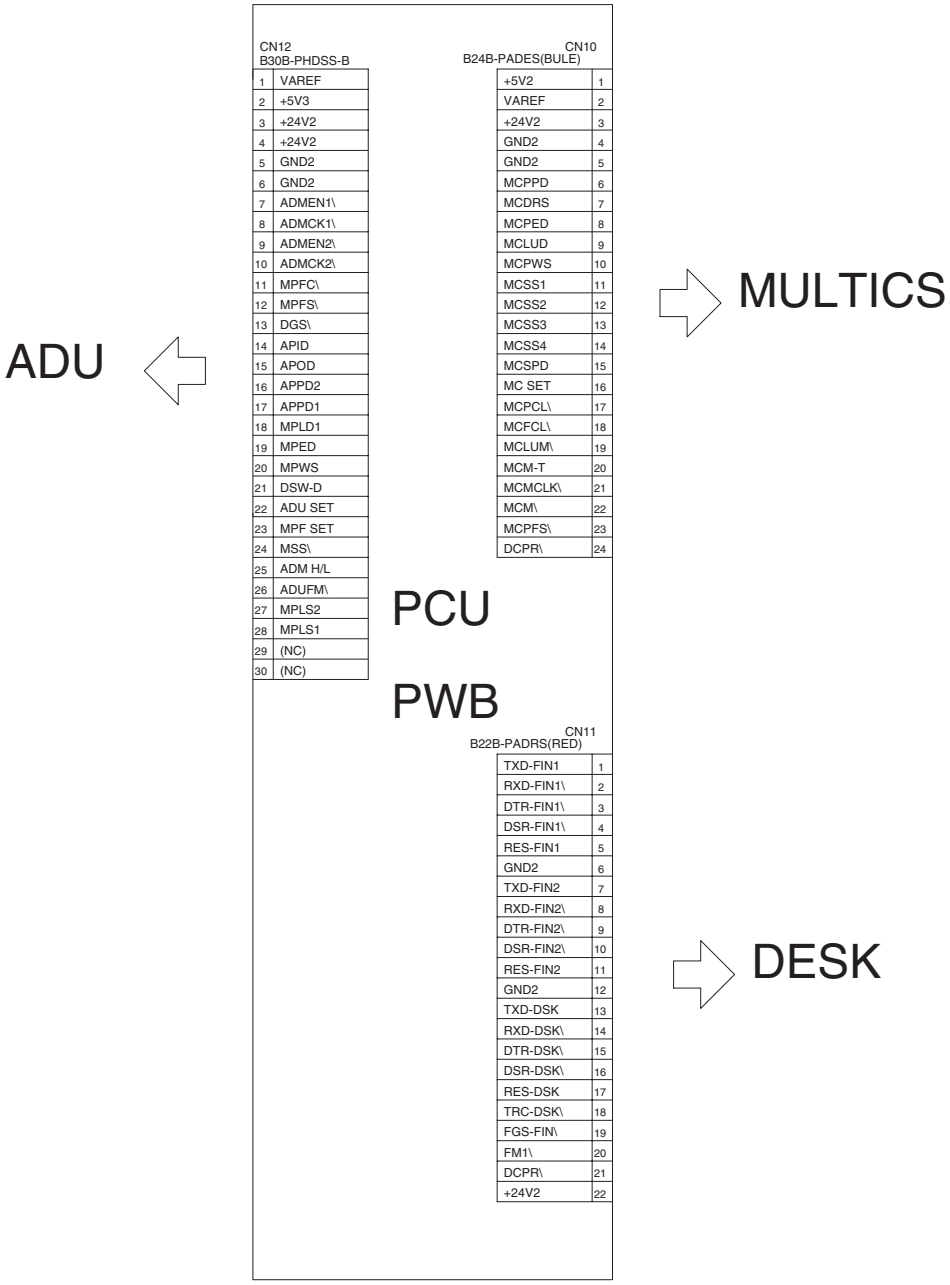
CN12
B30B-PHDSS-B
1 VAREF
2 +5V3
3 +24V2
4 +24V2
5 GND2
6 GND2
7 ADMEN1\
8 ADMCK1\
9 ADMEN2\
10 ADMCK2\
11 MPFC\
12 MPFS\
13 DGS\
14 APID
15 APOD
16 APPD2
17 APPD1
18 MPLD1
19 MPED
20 MPWS
21 DSW-D
22 ADU SET
23 MPF SET
24 MSS\
25 ADM H/L
26 ADUFM\
27 MPLS2
28 MPLS1
29 (NC)
30 (NC)
ADU
CN10
B24B-PADES(BULE)
+5V2 1
VAREF 2
+24V2 3
GND2 4
GND2 5
MCPPD 6
MCDRS 7
MCPED 8
MCLUD 9
MCPWS 10
MCSS1 11
MCSS2 12
MCSS3 13
MCSS4 14
MCSPD 15
MC SET 16
MCPCL\ 17
MCFCL\ 18
MCLUM\ 19
MCM-T 20
MCMCLK\ 21
MCM\ 22
MCPFS\ 23
DCPR\ 24
MULTICS
PCU
PWB
CN11
B22B-PADRS(RED)
TXD-FIN1 1
RXD-FIN1\ 2
DTR-FIN1\ 3
DSR-FIN1\ 4
RES-FIN1 5
GND2 6
TXD-FIN2 7
RXD-FIN2\ 8
DTR-FIN2\ 9
DSR-FIN2\ 10
RES-FIN2 11
GND2 12
TXD-DSK 13
RXD-DSK\ 14
DTR-DSK\ 15
DSR-DSK\ 16
RES-DSK 17
TRC-DSK\ 18
FGS-FIN\ 19
FM1\ 20
DCPR\ 21
+24V2 22
DESK

OPTION (1/1)

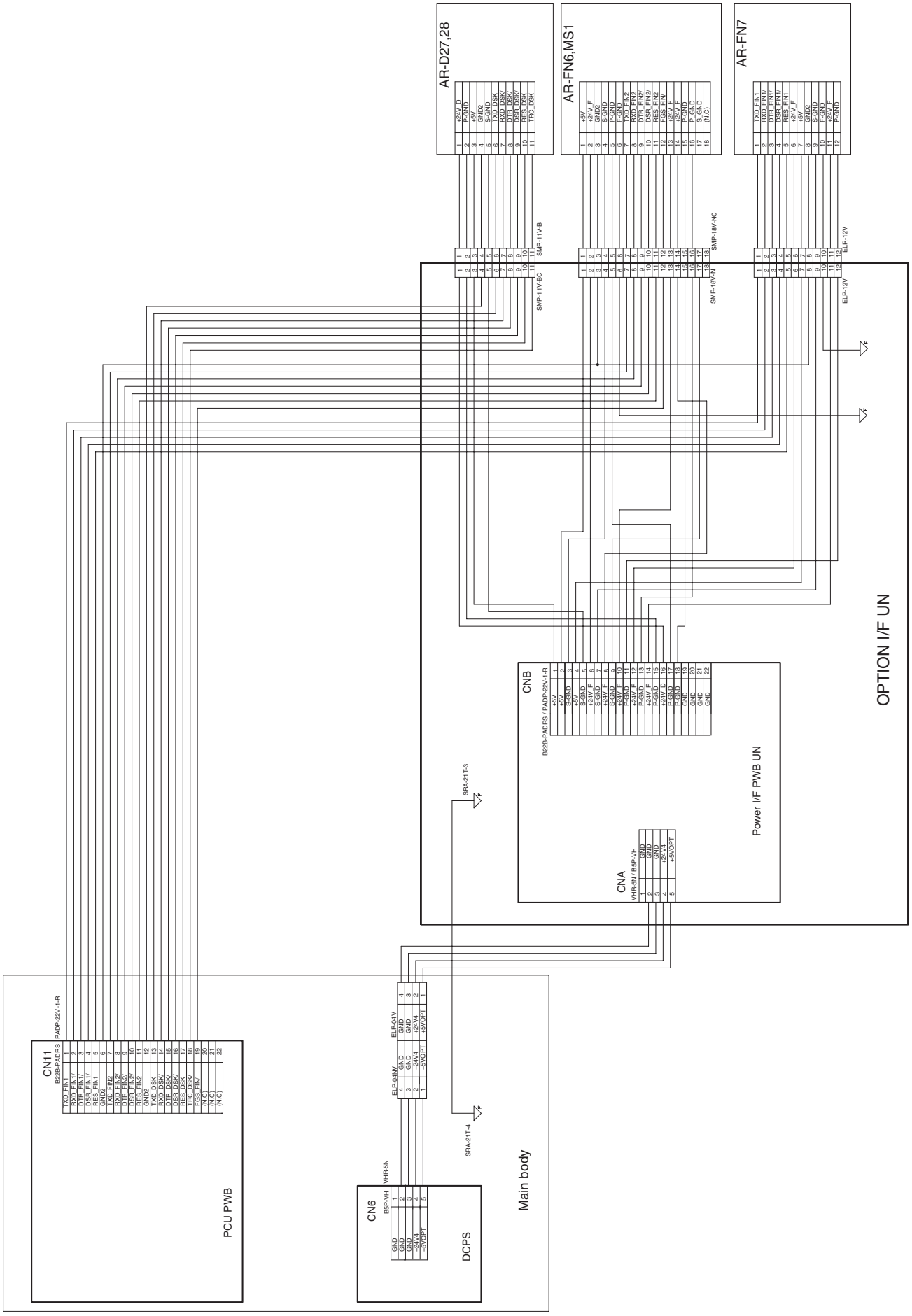
AR-D27,28
AR-FN6,MS1
AR-FN7
SMR-11V-B
SMP-11V-BC
SMR-18V-NC
SMR-18V-N
ELR-12V
ELP-12V
OPTION I/F UN
CNB
B22B-PADRS / PADP-22V-1-R
Power I/F PWB UN
CNA
VHR-3N / B3P-VH
SRA-21T-3
SRA-21T-4
CN11
B22B-PADRS
PADP-22V-1-R
PCU PWB
ELP-04N
ELR-04V
CN6
B5P-VH
VHR-5N
DCPS
Main body

DH-LINE (OPTION) (1/1)

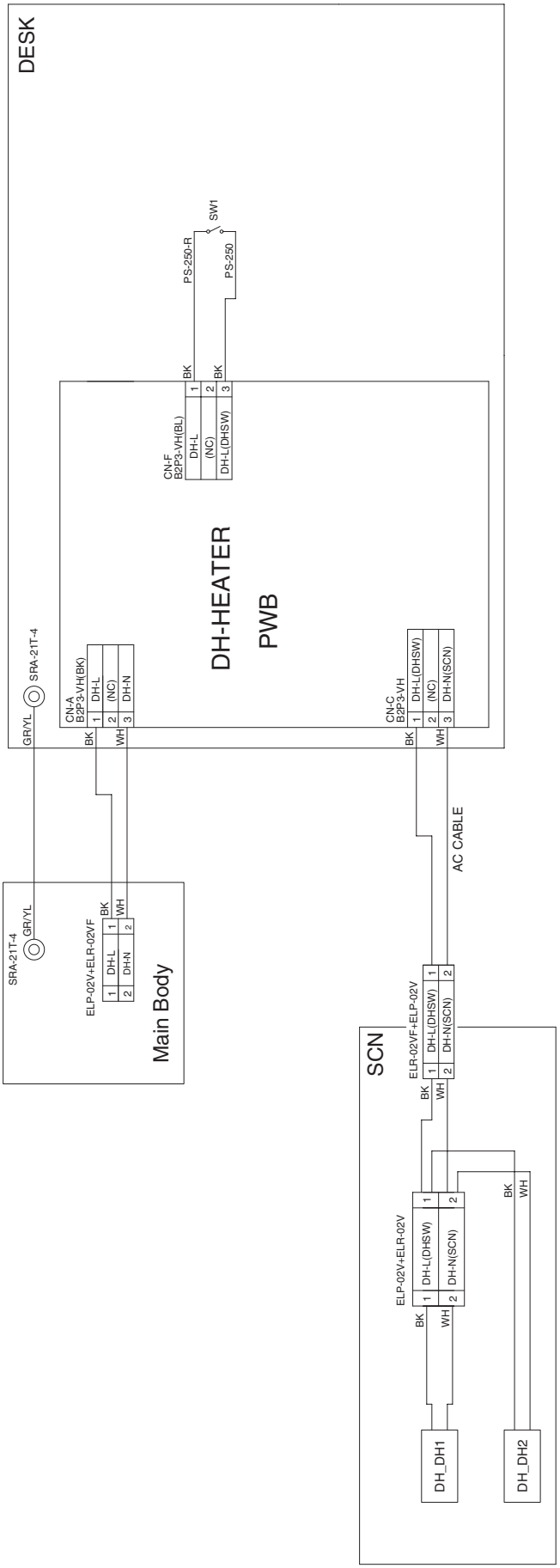

3. Signal name list

Signal name	Name	Function/Operation	Connector level		Connector No.	Pin NO.	PWB name	Remark
			L	H				
+24V_PR	Power relay 24V	Power relay 24V	—	—	14	2	PCU	
+5VLD	5V power for laser diode	5V power for laser diode	—	—	16	31	PCU	
ADUSET	ADU detection signal	ADU detection	With ADU	Without ADU	12	22	PCU	
APIND	ADU paper entry sensor signal	ADU paper entry detection	Paper pass	—	12	14	PCU	
APOD	ADU paper exit sensor signal	Paper exit detection	Paper present		12	15	PCU	
APPD1	ADU paper transport sensor signal 1	ADU upper-stream section paper pass detection	Paper pass	—	12	17	PCU	
APPD2	ADU paper transport sensor signal 2	ADU lower-stream section paper pass detection	Paper pass	—	12	16	PCU	
BUP_PR	Power save mode relay signal	Changeover between the power save mode and the normal power mode	—	—	2 14	12 14	PCU	
CRUCLK	Communication CLK	CRUM communication CLK	—	—	5	3	PCU	
CRUSDA	Communication data/ address signal	CRUM communication data/address signal	—	—	5	4	PCU	
CSS	Paper tray insertion detection signal	Paper tray insertion detection	With tray	Without tray	13	14	PCU	
DMCLK	OPC drum motor rotating speed control (CLK) signal	OPC drum motor rotating speed control	—	—	6	7	PCU	
DM-T	OPC drum motor lock detection signal	OPC drum motor lock detection	Rotation	Stop/Lock	6	6	PCU	
DSR_PCU	Serial communication control signal	Send control signal (serial communication)	—	—	2	25	PCU	
DSW-D	ADU door sensor signal	Door open/close detection	Door open	Door close	12	21	PCU	
DSW-F	Front door open/close detection signal	Front door open/close detection	Front door open	Front door close	4 6 6 9 9 15	32 1 2 1 2 1		
DSW-L	Left door open/close detection signal	Left door open/close detection	Left door open	Left door close	4 4	27 28	PCU	
DTR_PCU	Control signal for serial communication	Receive control signal (Serial communication)	—	—	2	27	PCU	
DVCH1	DV unit identification signal 1	Installation acknowledgment	—	—	8	1	PCU	
DVCH2	DV unit identification signal 2	Installation acknowledgment	—	—	8	2	PCU	
DVCH3	DV unit identification signal 3	Installation acknowledgment	—	—	8	3	PCU	
FW	AC power full wave signal	Power monitor	—	—	14	1	PCU	
FWP-PCU	Flash write protect signal	Flash write protect	—	—	2	29	PCU	
GND2_Tnin	GND	GND			5	1	PCU	
HLCNT1	Fusing roller center section heater lamp control signal	Fusing roller center section heating control	OFF	ON	14	5	PCU	
HLCNT2	Fusing roller both sides heater lamp control signal	Fusing roller both sides heating control	OFF	ON	14	6	PCU	
HLPRout	Fusing heater lamp power relay control signal	Fusing heater lamp power relay control	Relay OFF	Relay ON	14	3	PCU	
HSYNC	Horizontal sync signal	Horizontal sync	—	—	2	15	PCU	
HUS-DV	Development humidity sensor	Humidity detection around the developing unit	—	—	8	11	PCU	
LSU_S/H	Laser beam horizontal sync signal	Laser beam horizontal position timing control	—	—	16	8	PCU	
LUD	Paper tray upper limit detection signal	Paper tray upper limit detection	—	Upper limit	13	9	PCU	
LUMA	Paper tray lift-up motor control signal	Paper tray lift-up control	Stop	Up	13	20	PCU	
LUMB	Paper tray lift-up motor control signal	Paper tray lift-up control	Stop	Up	13	18	PCU	

Signal name	Name	Function/Operation	Connector level		Connector No.	Pin NO.	PWB name	Remark
			L	H				
MCLUD	MP tray upper limit sensor signal	MP tray upper limit detection	—	Upper limit	10	9	PCU	
MCM_T	Multi-purpose paper feed tray transport motor lock signal	Multi-purpose paper feed tray transport motor lock detection	Rotation	Stop/Lock	10	20	PCU	
MCMCLK	Multi-purpose paper feed tray transport motor clock signal	Multi-purpose paper feed tray transport motor rotating speed control	—	—	10	21	PCU	
MCPED	MP tray paper empty sensor signal	MP tray paper empty detection	Paper present	—	10	8	PCU	
MCPWS	MP tray width sensor detection	MP tray paper width detection	—	—	10	10	PCU	
MCSET					10	16	PCU	
MCSPD	MP tray paper remaining quantity sensor signal	MP tray paper remaining quantity detection	When pressed	—	10	15	PCU	
MCSS1	MP tray rear edge sensor 1 signal	MP tray rear edge size detection	When pressed	—	10	11	PCU	
MCSS2	MP tray rear edge sensor 2 signal	MP tray rear edge size detection	When pressed	—	10	12	PCU	
MCSS3	MP tray rear edge sensor 3 signal	MP tray rear edge size detection	When pressed	—	10	13	PCU	
MCSS4	MP tray rear edge sensor 4 signal	MP tray rear edge size detection	When pressed	—	10	14	PCU	
MHV-T	Main charger trouble detection signal	Main charger trouble detection	Trouble/ Without MHV	Normal	15	13	PCU	
MM-T	Main motor lock detection signal	Main motor lock detection	Rotation	Stop/Lock	9	8	PCU	
MPED	ADU manual feed paper sensor signal	Manual feed tray paper empty detection	Paper present	—	12	19	PCU	
MPFSET	Manual feed unit detection signal	Manual feed unit detection	Provided	Not provided	12	23	PCU	
MPLD1	Manual feed paper length sensor signal	Manual paper feed tray paper length detection	—	Paper present	12	18	PCU	
MPLS1	ADU tray pull-out sensor signal	Manual feed extension tray pull-out detection	—	Pull out	12	28	PCU	
MPLS2	ADU tray storing sensor signal	Manual feed extension tray storing detection	—	Storing	12	27	PCU	
MPWS	ADU manual feed paper width detection signal	Manual feed paper width detection	—	—	12	20	PCU	
PAGE	Page signal	Print timing control to the controller (output for every page)	—	—	2	13	PCU	
PED	Paper tray empty sensor signal	Paper empty detection	—	Paper empty	13	3	PCU	
PMCLK	Polygon mirror motor drive clock signal	Polygon mirror motor drive clock	—	—	16	27	PCU	
POD1	Paper exit detection 1 signal	Detection of paper exit from the fusing section	Paper pass	—	4	4	PCU	
POD2	Paper exit detection 2 signal	Paper exit paper pass detection	Paper pass	—	4	10	PCU	
POD3	Paper exit detection 3 signal	Detection of paper exit to the upper section paper exit tray (Full detection)	Paper pass (Full detection)	—	4	16	PCU	
RES_DSK	Desk reset signal	Desk reset	Operation enable	Reset	11	17	PCU	
RES_FIN1	Finisher reset signal	Finisher reset	Operation enable	Reset	11	5	PCU	
RES_FIN2	Finisher reset signal	Finisher reset	Operation enable	Reset	11	11	PCU	
RES_PCU	PCU reset signal	The controller resets the PCU.	Operation enable	Reset	2	17	PCU	
RTH1	Fusing roller temperature detection signal	Fusing roller temperature detection (Center section)	—	—	14	7	PCU	
RTH2	Fusing roller temperature detection signal	Fusing roller temperature detection (Edge section)	—	—	14	9	PCU	

Signal name	Name	Function/Operation	Connector level		Connector No.	Pin NO.	PWB name	Remark
			L	H				
RXD_DSK	Serial I/F data (DESK)	Serial I/F data (DESK-PCU PWB)	—	—	11	14	PCU	
RXD_FIN1	Serial I/F data (FINISHER)	Serial I/F data (FINISHER-PCU PWB)	—	—	11	2	PCU	
RXD_FIN2	Serial I/F data (FINISHER)	Serial I/F data (FINISHER-PCU PWB)	—	—	11	8	PCU	
RXD_PCU	Serial communication send data signal	Send data to the controller	—	—	2	21	PCU	
TCS	Toner concentration detection signal	Toner concentration detection	—	—	8	7	PCU	
TH-DV	Developing temperature sensor	Temperature detection around the developing unit	—	—	8	4	PCU	
THVin	N.C.	N.C.	—	—	15	14		
TMA	Toner motor control signal	Toner motor ON/OFF control	—	—	7	1	PCU	
TMB	Toner motor control signal	Toner motor ON/OFF control	—	—	7	2	PCU	
TXD_DSK	Serial I/F data (DESK)	Serial I/F data (PCU PWB-DESK)	—	—	11	13	PCU	
TXD_FIN1	Serial I/F data (FINISHER)	Serial I/F data (PCU PWB - FINISHER)	—	—	11	1	PCU	
TXD_FIN2	Serial I/F data (FINISHER)	Serial I/F data (PCU PWB - FINISHER)	—	—	11	7	PCU	
TXD_PCU	Serial communication receive data signal	Receive data from the controller	—	—	2	23	PCU	
VIDEO	Image signal	Image signal to the LSU	—	—	16	13	PCU	
VIDEOin-	Image signal	Image signal from the controller to the PCU PWB	—	—	2	9	PCU	
VIDEOin+	Image signal	Image signal from the controller to the PCU PWB	—	—	2	10	PCU	
VRB	Laser power control signal	Laser power control	—	—	16	9	PCU	
XADM_H/L	ADU motor current control signal	ADU motor current control	—	—	12	25	PCU	
XADMCK1	ADU upper transport motor clock signal	ADU upper transport motor rotation speed control	—	—	12	8	PCU	
XADMCK2	ADU lower transport motor clock signal	ADU lower transport motor rotation speed control	—	—	12	10	PCU	
XADMEN1	ADU upper transport motor control signal	ADU upper transport motor ON/OFF control	ON	OFF	12	7	PCU	
XADMEN2	ADU lower transport motor control signal	ADU lower transport motor ON/OFF control	ON	OFF	12	9	PCU	
XADUFM	ADU cooling fan control signal	Cooling fan control	ON	OFF	12	26	PCU	
XCFM1_PWM	Suction fan control signal	Suction fan control	Max. air flow	OFF	13	21	PCU	
XCFM2PWM	Ozone exhaust fan control signal	Ozone exhaust fan control	OFF	ON	4 4	15 20	PCU	
XCPFC	Paper cassette paper feed clutch control signal	Paper feed clutch control	Paper transport	—	13	4	PCU	
XDGS	ADU gate solenoid control signal	Gate select in duplex or paper exit	Duplex	Single	12	13	PCU	
XDHVPWM	Separation high voltage output control signal	Separation high voltage PWM control	—	—	15	7	PCU	
XDHVREM	Separation high voltage control signal	Separation high voltage ON/OFF control	ON	OFF	15	4	PCU	
XDM	OPC drum motor control signal (ON/OFF)	OPC drum motor ON/OFF	ON	OFF	6	5	PCU	
XDSR_DSK	Serial communication control signal	Receive control	—	—	11	16	PCU	
XDSR_FIN1	Serial communication control signal	Receive control	—	—	11	4	PCU	
XDSR_FIN2	Serial communication control signal	Receive control	—	—	11	10	PCU	
XDTR_DSK	Serial communication control signal	Send control	—	—	11	15	PCU	

Signal name	Name	Function/Operation	Connector level		Connector No.	Pin NO.	PWB name	Remark
			L	H				
XDTR_FIN1	Serial communication control signal	Send control	—	—	11	3	PCU	
XDTR_FIN2	Serial communication control signal	Send control	—	—	11	9	PCU	
XDVPWM	Developing bias voltage control signal (PWM)	Developing bias PWM control	—	—	15	11	PCU	
XDVREM	Developing bias control (ON/OFF) signal	Developing bias ON/OFF	ON	OFF	15	10	PCU	
XFGS_FIN	Finisher gate solenoid control signal	Finisher gate solenoid control	—	—	11	19	PCU	
XFM1	Fan	Fan	—	—	11	20	PCU	
XGBPWM	Main charger grid bias voltage (PWM) control signal	Main charger grid bias voltage (PWM) control	—	—	15	8	PCU	
XLDON	Laser ON/OFF control signal	Laser ON/OFF control	ON	OFF	16	15	PCU	
XMCDRS	MP door open/close sensor signal	MP left door open/close detection	—	Door close	10	7	PCU	
XMCFCL	Multi-purpose paper feed tray transport clutch	Clutch for transport from the MP tray	Paper transport	—	10	18	PCU	
XMCLUM	Multi-purpose paper feed tray lift-up motor	MP tray lift up	Up	Stop	10	19	PCU	
XMCM	Multi-purpose paper feed tray transport motor control signal	Multi-purpose paper feed tray transport motor ON/ OFF control	ON	OFF	10	22	PCU	
XMCPCL	Multi-purpose paper feed clutch	Clutch for paper feed from the MP tray			10	17	PCU	
XMCPPD	MP transport sensor signal	Paper detection on the path	Paper detection	—	10	6	PCU	
XMHVREM	Main charger control signal	Main charger ON/OFF	ON	OFF	15	5	PCU	
XMM	Main motor control signal	Main motor ON/OFF control	ON	OFF	9	7	PCU	
XMPFC	ADU manual feed paper feed clutch control signal	Clutch for paper feed from the manual paper feed tray	Paper feed	—	12	11	PCU	
XMPFS	ADU manual feed paper feed solenoid control signal	Solenoid for paper feed from the manual paper feed tray	Paper feed	—	12	12	PCU	
XMSS	ADU shutter solenoid control signal	Shutter open/close control in manual paper feed	Paper feed	—	12	24	PCU	
XMSWMON	MSW monitor signal	Main switch monitor	—	—	14	13	PCU	
XMSWOFF	MSW OFF signal	Main switch OFF signal	—	—	2	19	PCU	
XMSWPR	Main switch power relay control signal	Main switch power relay control	Relay ON	Relay OFF	14	12	PCU	
XPNC	Mechanism counter	Mechanism counter	—	—	23	1	PCU	
XPOF	Power OFF status signal	Power OFF status	Power OFF	Power ON	2	20	PCU	
XPOMA	Paper exit motor control signal (Phase A)	Paper exit unit paper transport	—	—	4	5	PCU	
XPOMB	Paper exit motor control signal (Phase B)	Paper exit unit paper transport	—	—	4	3	PCU	
XPOMXA	Paper exit motor control signal (Phase /A)	Paper exit unit paper transport	—	—	4	7	PCU	
XPOMXB	Paper exit motor control signal (Phase /B)	Paper exit unit paper transport	—	—	4	1	PCU	
XPPD1	Resist roller front paper pass detection signal	Detection of paper pass in front of the resist roller	Paper pass	—	13	17	PCU	
XPSPS	Separation solenoid control signal	Separation solenoid control	Separation	—	5	5	PCU	
XREADY	LSU motor READY signal	LSU motor READY detection	—	—	16	28	PCU	
XRRC	Resist roller clutch control signal	Resist roller clutch ON/ OFF control	Paper transport	—	13	8	PCU	
XRSVOUT2	Reserved	Reserved	—	—	5	7	PCU	
XSTART	Polygon mirror motor drive start signal	Polygon mirror motor control	ON	OFF	16	25	PCU	

Signal name	Name	Function/Operation	Connector level		Connector No.	Pin NO.	PWB name	Remark
			L	H				
XSYNC	LSU horizontal sync detection signal	LSU horizontal sync detection (BD sensor signal)	—	—	16	4	PCU	
XTHV+PWM	Transfer charger output control signal (THV+)	Transfer charger output control (PWM control)	—	—	15	6	PCU	
XTHV-PWM	Transfer charger output control signal (THV-)	Transfer charger output control (PWM control)	—	—	15	9	PCU	
XTHVREM	Transfer charger control signal (THV)	Transfer charger ON/OFF control	ON	OFF	15	12	PCU	
XTRC	Paper transport roller clutch control signal	Paper transport roller ON/ OFF control	—	—	13	12	PCU	
XTRC_DSK	Paper transport timing signal	Paper transport timing	—	—	11	18	PCU	
XVFM1_PWM	Cooling fan control signal	Cooling fan control	Max. air flow	OFF	16 16	23 26	PCU	
XVFM2PWM	Heat exhaust fan control signal	Heat exhaust fan control	Max. air flow	OFF	4	22	PCU	
XVIDEO	Image signal	Image signal to the LSU	—	—	16	14	PCU	

*1: Multi paper feed tray vertical size detection

	Vertical size detection: Connector level				Paper size		
Multi paper feed tray 1	M1SS1	M1SS2	M1SS3	M1SS4	AB series	Inch series	China series
Multi paper feed tray 2	M2SS1	M2SS2	M2SS3	M2SS4			
1	L	L	H	L	B5	Extra	K16
2	H	L	H	L	A4 A5R	LT INVR	A4 A5R
3	H	L	L	L	B5R	EX-R	K16R
4	H	H	L	L	A4R	LTR	A4R
5	L	H	L	L	Foolscap	Extra	Foolscap
6	L	H	L	H	B4	LGL	K8
7	L	L	L	H	A3	WLT	
0	H	H	H	H	Tray not installed		

*2: Options

No.	CV_SIZE3	CV_SIZE2	CV_SIZE1	CV_SIZE0	Paper size
0	0	0	0	0	none
1	0	0	0	1	A3
2	0	0	1	0	A4
3	0	0	1	1	LT
4	0	1	0	0	B4
5	0	1	0	1	LG
6	0	1	1	0	WLT
7	0	1	1	1	INV
8	1	0	0	0	B5
9	1	0	0	1	Extra
10	1	0	1	0	A5
11	1	0	1	1	F4
12	1	1	0	0	A4R
13	1	1	0	1	B5R
14	1	1	1	0	LTR
15	1	1	1	1	A5R

Memo

Memo

LEAD-FREE SOLDER

The PWB's of this model employs lead-free solder. The "LF" marks indicated on the PWB's and the Service Manual mean "Lead-Free" solder.
The alphabet following the LF mark shows the kind of lead-free solder.

Example:

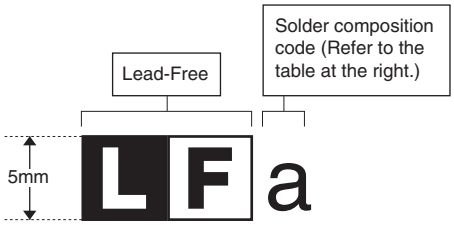

<Solder composition code of lead-free solder>

Solder composition	Solder composition code
Sn-Ag-Cu	a
Sn-Ag-Bi Sn-Ag-Bi-Cu	b
Sn-Zn-Bi	z
Sn-In-Ag-Bi	i
Sn-Cu-Ni	n
Sn-Ag-Sb	s
Bi-Sn-Ag-P Bi-Sn-Ag	p

(1) NOTE FOR THE USE OF LEAD-FREE SOLDER THREAD

When repairing a lead-free solder PWB, use lead-free solder thread.

Never use conventional lead solder thread, which may cause a breakdown or an accident.

Since the melting point of lead-free solder thread is about 40°C higher than that of conventional lead solder thread, the use of the exclusive-use soldering iron is recommendable.

(2) NOTE FOR SOLDERING WORK

Since the melting point of lead-free solder is about 220°C, which is about 40°C higher than that of conventional lead solder, and its soldering capacity is inferior to conventional one, it is apt to keep the soldering iron in contact with the PWB for longer time. This may cause land separation or may exceed the heat-resistive temperature of components. Use enough care to separate the soldering iron from the PWB when completion of soldering is confirmed.

Since lead-free solder includes a greater quantity of tin, the iron tip may corrode easily. Turn ON/OFF the soldering iron power frequently.

If different-kind solder remains on the soldering iron tip, it is melted together with lead-free solder. To avoid this, clean the soldering iron tip after completion of soldering work.

If the soldering iron tip is discolored black during soldering work, clean and file the tip with steel wool or a fine filer.

CAUTION FOR BATTERY REPLACEMENT

(Danish) ADVARSEL !

Lithiumbatteri – Eksplosionsfare ved fejlagtig håndtering.
Udskiftning må kun ske med batteri
af samme fabrikat og type.
Levér det brugte batteri tilbage til leverandoren.

(English) Caution !

Danger of explosion if battery is incorrectly replaced.
Replace only with the same or equivalent type
recommended by the manufacturer.
Dispose of used batteries according to manufacturer's instructions.

(Finnish) VAROITUS

Paristo voi räjähtää, jos se on virheellisesti asennettu.
Vaihda paristo ainoastaan laitevalmistajan suosittelemaan
tyyppiin. Hävitä käytetty paristo valmistajan ohjeiden
mukaisesti.

(French) ATTENTION

Il y a danger d'explosion s' il y a remplacement incorrect
de la batterie. Remplacer uniquement avec une batterie du
même type ou d'un type équivalent recommandé par
le constructeur.
Mettre au rebut les batteries usagées conformément aux
instructions du fabricant.

(Swedish) VARNING

Explosionsfara vid felaktigt batteribyte.
Använd samma batterityp eller en ekvivalent
typ som rekommenderas av apparattillverkaren.
Kassera använt batteri enligt fabrikantens
instruktion.

(German) Achtung

Explosionsgefahr bei Verwendung inkorrekter Batterien.
Als Ersatzbatterien dürfen nur Batterien vom gleichen Typ oder
vom Hersteller empfohlene Batterien verwendet werden.
Entsorgung der gebrauchten Batterien nur nach den vom
Hersteller angegebenen Anweisungen.

CAUTION FOR BATTERY DISPOSAL

(For USA, CANADA)

"BATTERY DISPOSAL"

THIS PRODUCT CONTAINS A LITHIUM PRIMARY (MANGANESS DIOXIDE) MEMORY BACK-UP BATTERY THAT MUST BE DISPOSED OF PROPERLY. REMOVE THE BATTERY FROM THE PRODUCT AND CONTACT YOUR LOCAL ENVIRONMENTAL AGENCIES FOR INFORMATION ON RECYCLING AND DISPOSAL OPTIONS.

"TRAITEMENT DES PILES USAGÉES"

CE PRODUIT CONTIENT UNE PILE DE SAUVEGARDE DE MÉMOIRE LITHIUM PRIMAIRE (DIOXYDE DE MANGANÈSE) QUI DOIT ÊTRE TRAITÉE CORRECTEMENT. ENLEVEZ LA PILE DU PRODUIT ET PRENEZ CONTACT AVEC VOTRE AGENCE ENVIRONNEMENTALE LOCALE POUR DES INFORMATIONS SUR LES MÉTHODES DE RECYCLAGE ET DE TRAITEMENT.

SHARP®

COPYRIGHT © 2005 BY SHARP CORPORATION

All rights reserved.
Printed in Japan.
No part of this publication may be reproduced,
stored in a retrieval system, or transmitted,
in any form or by any means,
electronic; mechanical; photocopying; recording or otherwise
without prior written permission of the publisher.

Trademark acknowledgements

- Microsoft® Windows® operating system is a trademark or copyright of Microsoft Corporation in the U.S.A. and other countries.
- Windows® 95, Windows® 98, Windows® Me, Windows NT® 4.0, Windows® 2000, and Windows® XP are trademarks or copyrights of Microsoft Corporation in the U.S.A. and other countries.
- IBM and PC/AT are trademarks of International Business Machines Corporation.
- Acrobat® Reader Copyright® 1987- 2002 Adobe Systems Incorporated. All rights reserved. Adobe, the Adobe logo, Acrobat, and the Acrobat logo are trademarks of Adobe Systems Incorporated.
- All other trademarks and copyrights are the property of their respective owners.

SHARP CORPORATION
Digital Document System Group
Quality Enhancement Center
Yamatokoriyama, Nara 639-1186, Japan
2005 February Printed in Japan